ANL/NE-16/21

Waste Treatment of Acidic Solutions from the Dissolution of Irradiated LEU Targets for 99-Mo Production

Nuclear Engineering Division

About Argonne National Laboratory
Argonne is a U.S. Department of Energy laboratory managed by UChicago Argonne, LLC under contract DE-AC02-06CH11357. The Laboratory's main facility is outside Chicago, at 9700 South Cass Avenue, Argonne, Illinois 60439. For information about Argonne and its pioneering science and technology programs, see www.anl.gov.

DOCUMENT AVAILABILITY

Online Access: U.S. Department of Energy (DOE) reports produced after 1991 and a growing number of pre-1991 documents are available free via DOE's SciTech Connect (http://www.osti.gov/scitech/)

Reports not in digital format may be purchased by the public from the National Technical Information Service (NTIS):

U.S. Department of Commerce
National Technical Information Service
5301 Shawnee Rd
Alexandria, VA 22312
www.ntis.gov
Phone: (800) 553-NTIS (6847) or (703)
605-6000 Fax: (703) 605-6900
Email: **orders@ntis.gov**

Reports not in digital format are available to DOE and DOE contractors from the Office of Scientific and Technical Information (OSTI):

U.S. Department of Energy
Office of Scientific and Technical Information
P.O. Box 62
Oak Ridge, TN 37831-0062
www.osti.gov
Phone: (865) 576-8401
Fax: (865) 576-5728
Email: **reports@osti.gov**

Disclaimer
This report was prepared as an account of work sponsored by an agency of the United States Government. Neither the United States Government nor any agency thereof, nor UChicago Argonne, LLC, nor any of their employees or officers, makes any warranty, express or implied, or assumes any legal liability or responsibility for the accuracy, completeness, or usefulness of any information, apparatus, product, or process disclosed, or represents that its use would not infringe privately owned rights. Reference herein to any specific commercial product, process, or service by trade name, trademark, manufacturer, or otherwise, does not necessarily constitute or imply its endorsement, recommendation, or favoring by the United States Government or any agency thereof. The views and opinions of document authors expressed herein do not necessarily state or reflect those of the United States Government or any agency thereof, Argonne National Laboratory, or UChicago Argonne, LLC.

ANL/NE-16/21

Waste Treatment of Acidic Solutions from the Dissolution of Irradiated LEU Targets for 99-Mo Production

by
Allen J. Bakel, Cliff Conner, Kevin Quigley, and George F. Vandegrift
Nuclear Engineering Division, Argonne National Laboratory

Completed: September 2001
Published: October 2016

CONTENTS

Abstract **1**

1 Introduction **2**

2 Equipment **3**

2.1 Calciner/Evaporator 3
2.2 Mechanical Shield 6
2.2 Equipment Testing 8
2.2.1 Functional Equipment 8
2.2.1.1 Static Water Tests 8
2.2.1.2 Dynamic Water Tests 10
2.2.2 Effects of Equipment Modifications 11
2.3 Mechanical Shield 12

3 Results and Discussion **14**

3.1 Direct Calcination of UNH/Nitric Acid Solutions 14
3.1.1 One-Step Process 14
3.1.2 Two-Step Process 16
3.1.2.1 Operating Conditions 16
3.1.2.2 Chemical Processes 19
3.2 Chemically Assisted Calcination-Denitration 21
3.2.1 Peroxide 21
3.2.2 Formic Acid 23
3.2.3 Oxalic Acid 24
3.3 Out-of-Cup Precipitation 24
3.4 In-Cup Precipitation 26

4 Conclusions **34**

5 References **35**

FIGURES

1 Schematic of calciner equipment 3

2 Detail of calciner cup 4

3 Detail of calciner head 4

4 Sodium hydroxide scrubbers for off-gas 5

FIGURES (Cont.)

5 Overall view of system 5

6 Schematic diagram of calciner head incorporating a 1-in. vent tube 7

7 Annotated photograph of 1-in.vent tube calciner head before installation 7

8 Schematic of a shield to prevent the contamination of the calciner head during calciner operation 8

9 Photographs of a mechanical shield to prevent the contamination of the calciner head during calciner operation 9

10 Average condensation rate vs. charge volume in static water tests 10

11 Condensation rate vs. furnace temperature and steady-state volume in the calciner cup 11

12 Vapor temperature and condensation rate as functions of time. These data were collected during a direct calcining of UNH in the 1-in. calciner head. 12

13 Photograph showing contamination of the calciner head after a typical two-step direct calcination of UNH 13

14 Photographs showing the effect of the mechanical shield: mechanical shield covered with solids after the test and the clean calciner head with the shield removed 13

15 Vapor temperature as a function of time for tests in which UNH was fed into the calciner at 500°C with and without a shield 14

16 Black powder, thought to be U_3O_8, in the condenser after one-step calcination of UNH/nitric acid solution 15

17 Yellow powder found in the upper vent tube after one-step calcination of UNH/nitric acid solution 16

18 Measured condensation rate as a function of furnace temperature for three calciner tests 17

19 Photograph of the calciner cup after feed of 675 g U in 6.68 L of 1 M nitric acid solution 18

20 Photograph of the calciner cup after calcination at 600°C for 2 hours of the material shown in Figure 19 19

FIGURES (Cont.)

21 Photograph of the reaction flask after feed was stopped and all of the liquid was boiled away. Note the splatter on the side of the vessel. 20

22 Second photograph of the reaction flask after feed was stopped and all of the liquid was boiled away. Note the porous, yellow solid in the bottom of the vessel. 20

23 Photograph of small-scale hydrogen peroxide test after settling for several hours 22

24 Photograph of small-scale oxalic acid test after settling for one hour 25

25 Photograph of the reaction flask containing solid oxalic acid and UNH/HNO_3 solution before heating. Note that some of the oxalic acid remains and has not reacted to form uranyl oxalate. 27

26 Photograph of reaction flask after boiling had begun. Note that solid oxalic acid and solid uranyl oxalate are suspended in the solution as a result of the boiling. 27

27 Photograph of reaction flask during evaporation. A small amount of brown gas, presumably NO_2, is being generated. 28

28 Later photograph of reaction flask during evaporation. Note that the amount of NO_2 is significantly higher than the photograph in Figure 27. 28

29 Photograph of reaction flask immediately after all of the liquid had evaporated 29

30 Photograph of the reaction vessel some time after all of the liquid had evaporated. The temperature of the system reached about 450°C. 29

31 Photograph of the reaction flask after the initial addition of 113 g of oxalic acid and 100 mL of UNH/nitric acid solution 31

32 Photograph of reaction vessel after addition of 1800 mL of UNH/nitric acid solution 31

33 Photograph of reaction vessel during calcination; note evolution of NO_2 32

34 Photograph of reaction vessel after calcination 32

TABLES

1 Density of slurry in the reaction vessel at various points during the experiment 30

This page is intentionally left blank.

WASTE TREATMENT OF ACIDIC SOLUTIONS FROM THE DISSOLUTION OF IRRADIATED LEU TARGETS FOR 99MO PRODUCTION

ABSTRACT

One of the missions of the Reduced Enrichment for Research and Test Reactors (RERTR) program (and now the National Nuclear Security Administrations Material Management and Minimization program) is to facilitate the use of low enriched uranium (LEU) targets for ^{99}Mo production. The conversion from highly enriched uranium (HEU) to LEU targets will require five to six times more uranium to produce an equivalent amount of ^{99}Mo. The work discussed here addresses the technical challenges encountered in the treatment of uranyl nitrate hexahydrate (UNH)/nitric acid solutions remaining after the dissolution of LEU targets. Specifically, the focus of this work is the calcination of the uranium waste from ^{99}Mo production using LEU foil targets and the Modified Cintichem Process.

Work with our calciner system showed that high furnace temperature, a large vent tube, and a mechanical shield are beneficial for calciner operation. One- and two-step direct calcination processes were evaluated. The high-temperature one-step process led to contamination of the calciner system. The two-step direct calcination process operated stably and resulted in a relatively large amount of material in the calciner cup. Chemically assisted calcination using peroxide was rejected for further work due to the difficulty in handling the products. Chemically assisted calcination using formic acid was rejected due to unstable operation. Chemically assisted calcination using oxalic acid was recommended, although a better understanding of its chemistry is needed.

Overall, this work showed that the two-step direct calcination and the in-cup oxalic acid processes are the best approaches for the treatment of the UNH/nitric acid waste solutions remaining from dissolution of LEU targets for ^{99}Mo production.

1 INTRODUCTION

The RERTR Program was established in 1978 at Argonne National Laboratory (ANL) by the Department of Energy (DOE). The primary objective of this program was to develop the technology needed to use LEU instead of HEU in research and test reactors, and to do so without significant penalties in experimental performance, economics, or safety aspects of the reactors.

Production of medical-grade ^{99}Mo by irradiation of HEU targets is a major activity in research and test reactors. Technetium-99m, the daughter of ^{99}Mo, is the most commonly used medical radioisotope in the world. It is used in over nine million medical procedures annually in the U.S. alone and comprises 80% of all nuclear-medicine procedures. Molybdenum-99 is typically produced by the thermal neutron fission of ^{235}U. The yield of ^{99}Mo from fissioning ^{235}U is ~6%. The targets are usually HEU.

Currently, there are only a few major producers of ^{99}Mo, but many nations with developing nuclear programs are seeking to become producers, both for domestic and foreign consumption. Therefore, an important component of the RERTR program's goal of reducing world commerce in HEU is to encourage and facilitate the production of ^{99}Mo using LEU. To yield equivalent amounts of ^{99}Mo, the LEU targets must contain five to six times as much uranium as the HEU targets they replace. Substituting LEU for HEU in targets will require, in most cases, changes in both target design and processing.

Several of the ^{99}Mo producers use uranium targets, which are dissolved in nitric acid. The waste solution from this dissolution process contains the uranium (as uranyl nitrate), nitric acid, and the bulk of the fission products. To reduce the volume and generate a solid that is acceptable for long-term storage, the liquid waste is evaporated and calcined. During evaporation, a batch of waste solution is fed continuously into the evaporator/calciner. The next step is conversion of the molten UNH to solid UO_3.

Conversion to LEU targets will present two challenges: (1) the amount of solution requiring calcining will increase and (2) the amount of uranium per batch will increase by five to six times. The first challenge requires that the evaporation rate be increased in order to process each batch of LEU waste in the same amount of time as a batch of HEU waste. The second challenge is more difficult. To keep the number of waste packages the same as for the HEU case, the amount of uranium per waste package needs to be increased by a factor of five or six.

The purpose of this report is to describe work done at ANL with regard to the treatment of the relatively large amount of uranium-rich acidic waste solutions from the dissolution of LEU targets for ^{99}Mo production. In particular, we detail the development and testing of processes to isolate uranium in a solid form.

The goal of this work is to develop and evaluate processes for the treatment and disposal of the uranium waste from ^{99}Mo production using LEU targets. Recommendations regarding several processes are made based on the results of our investigations.

2 EQUIPMENT

The equipment designed and built in our laboratory for this study was based on our understanding of the calciners/evaporators currently in use. While our system was not meant to be a scale model of that system, the basic design was meant to be similar. An operating criterion was stable operation at a condensation rate of at least 1.0 L/hr (17 mL/min).

2.1 CALCINER/EVAPORATOR

The original 0.5-in. vent tube calciner/evaporator used in this study is shown schematically in Figure 1. Figures 2 and 3 show details of the calciner cup and calciner head. The calciner head is permanently attached to the furnace and is connected to a water-cooled condenser. Condensed liquid is collected in a vessel, and the vapor is pulled through two NaOH scrubbers to catch NO_x (shown in Figure 4). The calciner cup is screwed into the calciner head and may be removed after each experiment for inspection. The temperatures of the solution and vapor are measured during operation. An overall view of the system is shown in Figure 5.

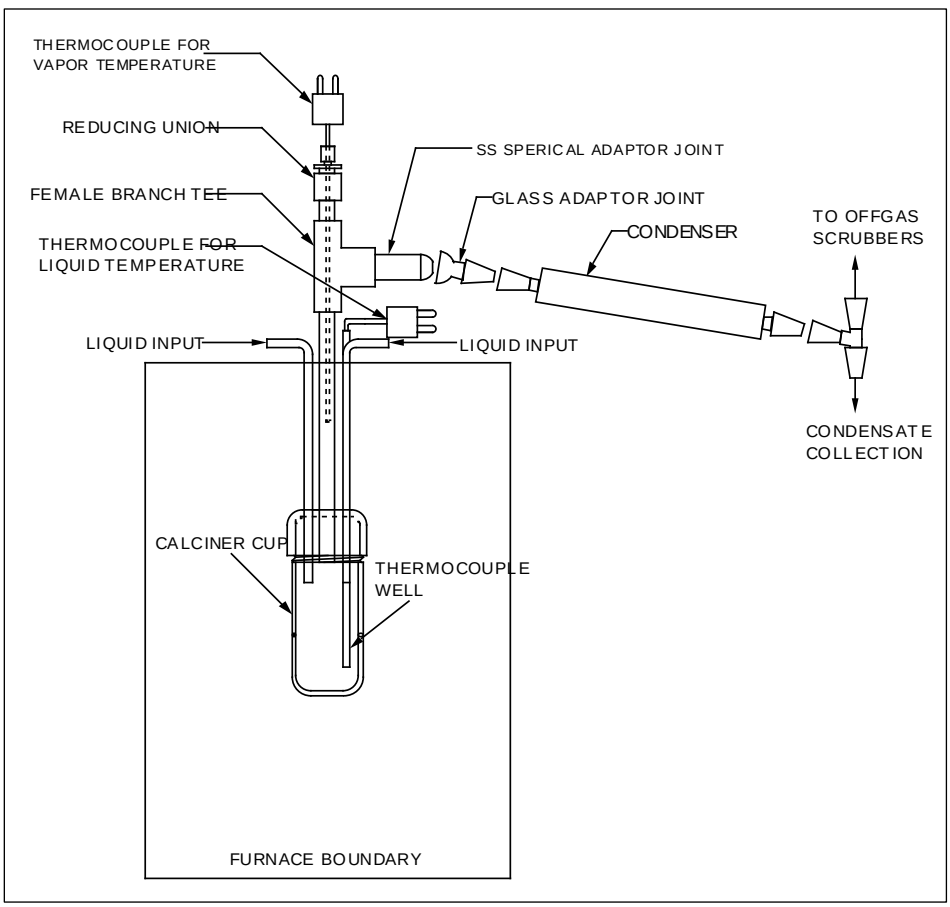

FIGURE 1 Schematic of calciner equipment

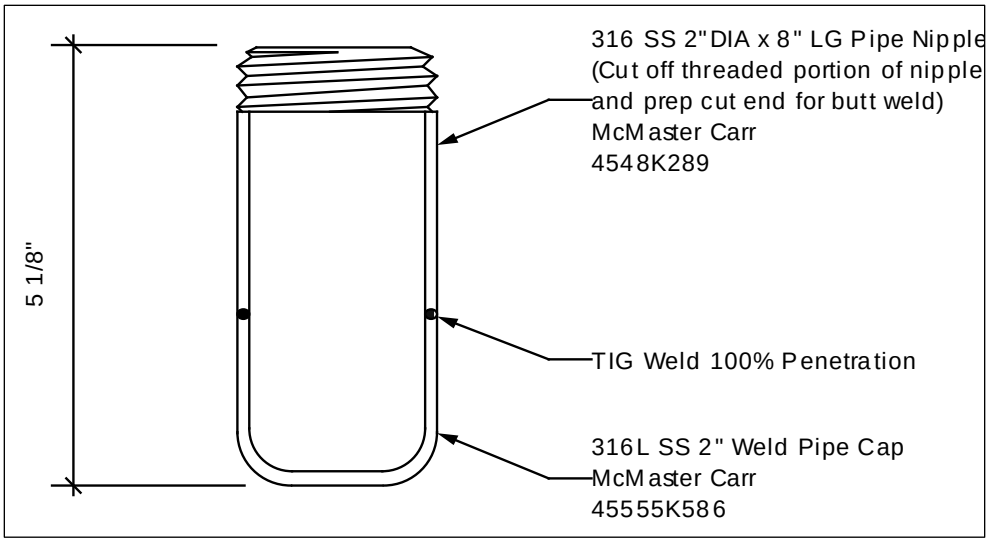

FIGURE 2 Detail of calciner cup

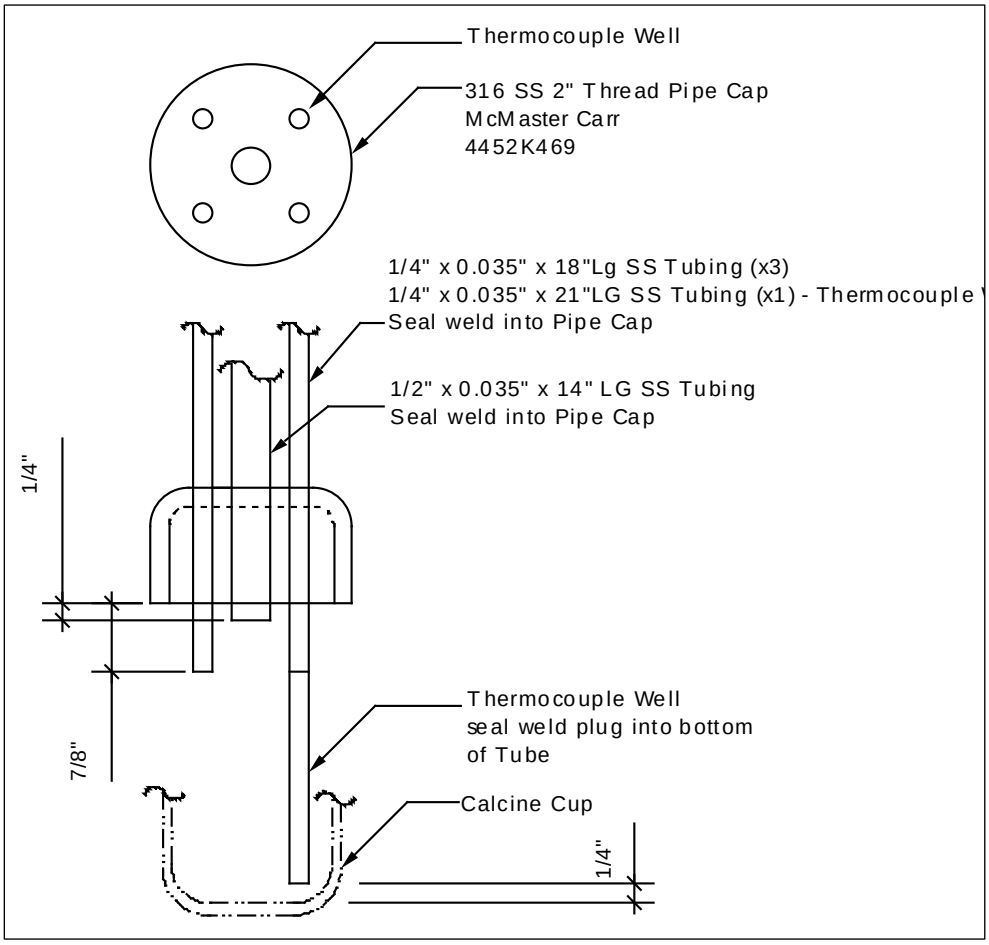

FIGURE 3 Detail of calciner head

FIGURE 4 Sodium hydroxide scrubbers for off-gas

FIGURE 5 Overall view of system

Experience with the 0.5-in. vent-tube calciner showed that the maximum feed rate attainable during stable operation was about 0.6 L/hr (10 mL/min), and that feed rates greater than this led to overflow of the calciner cup. Because the design criteria of the system included a feed rate of 1 L/hr, we needed to attain a higher feed rate.

The ultimate limitation on the feed rate of the 0.5-in. vent tube calciner was thought to be the rate at which gas escaped from the calciner cup. The feed rate of liquid into the calciner cup correlates directly to the rate of gas generation inside the cup and the average velocity of gas leaving the cup. At high gas velocities (i.e., those generated at a feed rate >0.6 L/hr), the liquid was apparently swept out of the cup. This phenomenon might have been responsible for the observed overflow at high feed rates.

In the original calciner design, gas exits the calciner cup through the 0.5-in. diameter vent tube. We theorized that a larger diameter vent tube would allow the gas to exit the calciner cup at a lower velocity, allowing stable operation at higher feed rates. Based on these ideas, a new calciner head was designed and built with a 1-in. vent tube (Figures 6 and 7).

2.2 MECHANICAL SHIELD

Operations in our laboratory show that the direct calcination of UNH/nitric acid solutions led to sputtering. During evaporation, a pool of high viscosity solution or molten UNH was thought to form. Sputtering apparently occurs during the decomposition of the material in this pool to uranium oxides and nitrogen oxide gases. This process leads to operational problems such as contamination of the calciner head and, potentially, clogging of the feed or vent tubes. Because sputtering has been a problem during calcination in the HEU process, it was expected to be a bigger problem in the LEU process, in which five to six times more uranium will be placed in the calciner cup. We theorized that a mechanical shield placed at the top of the calciner cup could prevent these problems.

The shield was designed to protect the calciner head from contamination and clogging and to have little or no effect on the operation of the calciner. A 1-in. center opening allowed the generated gas out of the cup. Other holes were included for feed tubes and thermocouples. A second offset shield protected the vent tube from any sputtered material. The shield was fabricated from thin-gauge 304 stainless steel. A drawing of the shield is shown in Figure 8, and photographs are shown in Figure 9.

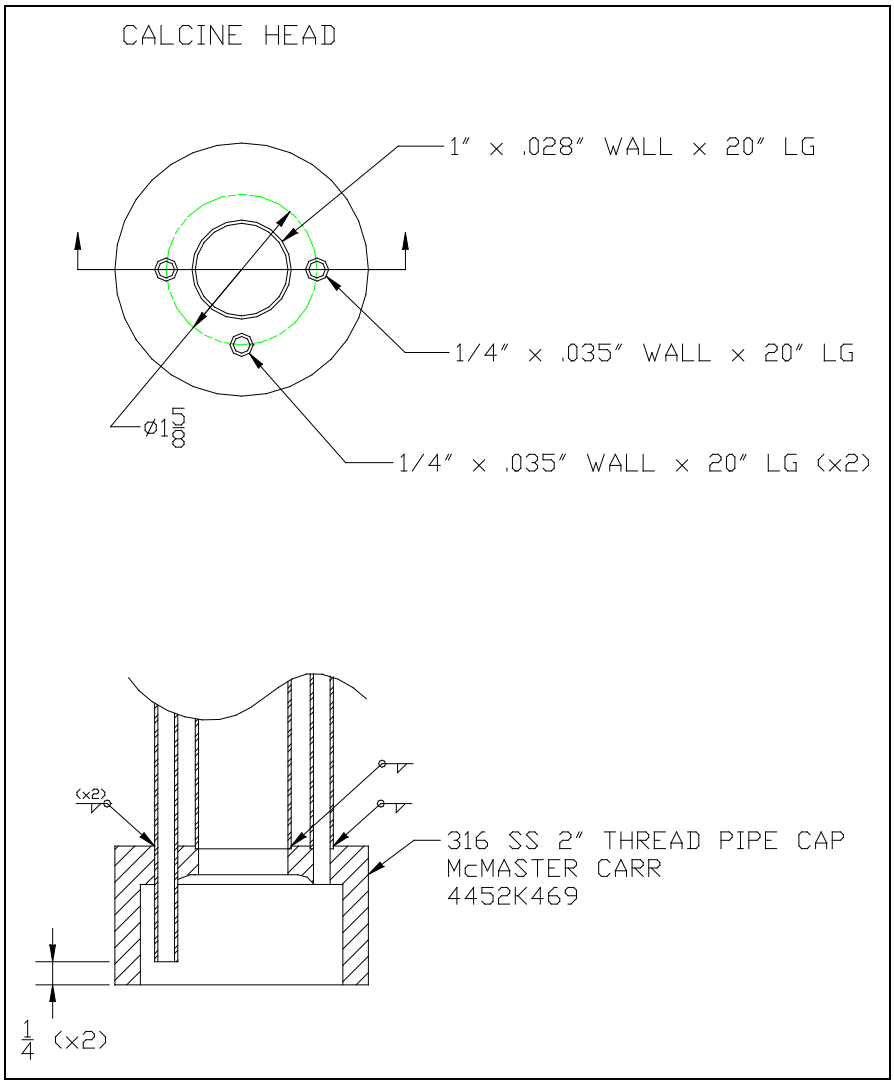

FIGURE 6 Schematic diagram of calciner head incorporating a 1-in. vent tube

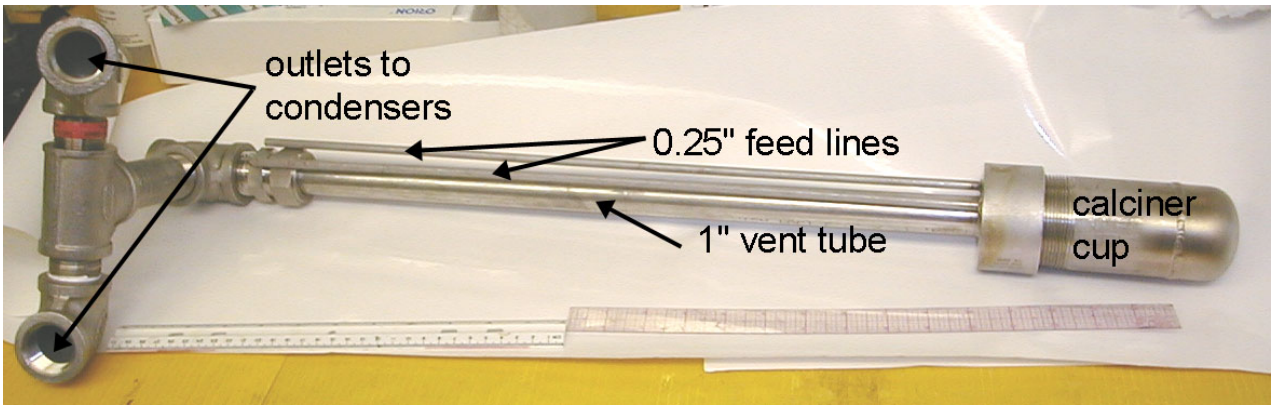

FIGURE 7 Annotated photograph of 1-in.vent tube calciner head before installation

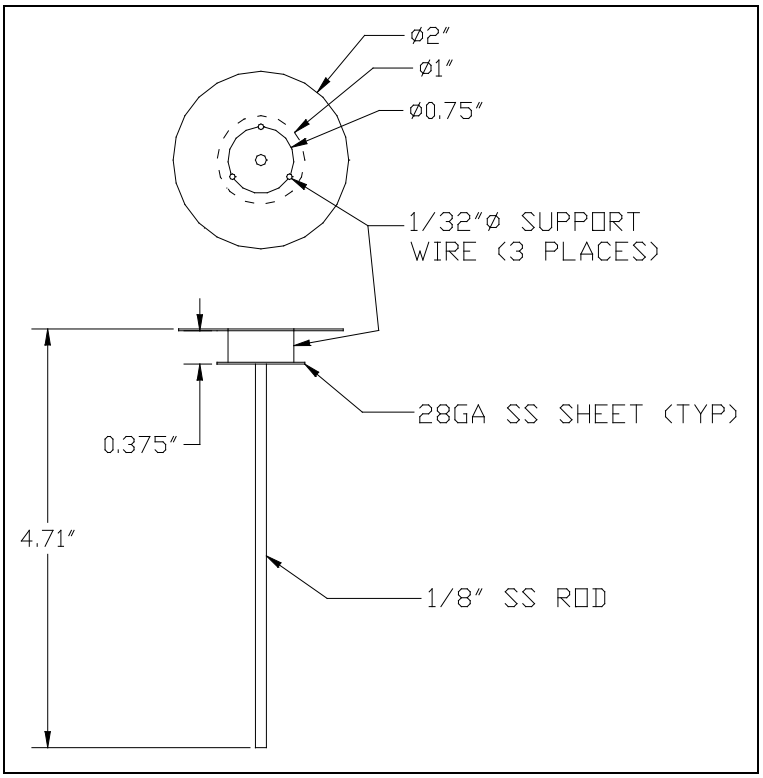

FIGURE 8 Schematic of a shield to prevent the contamination of the calciner head during calciner operation

2.2 EQUIPMENT TESTING

2.2.1 Functional Equipment

Initial experiments were performed to gain experience with the calciner system and determine its performance characteristics.

2.2.1.1 Static Water Tests

Initial experiments used evaporation of water to gain experience with and determine the performance of the system. In these experiments, we placed a known volume of liquid water into the calciner cup, screwed the calciner cup into the calciner head, set the furnace to a known temperature, measured the solution and vapor[1] temperatures, and collected condensate over time.

---

1 Measured temperature in the vapor space above the solution varied considerably during each run from 100°C to ambient furnace temperature (200–400°C). This is likely due to heat transfer to the gas phase (i.e., head space) after the water has evaporated.

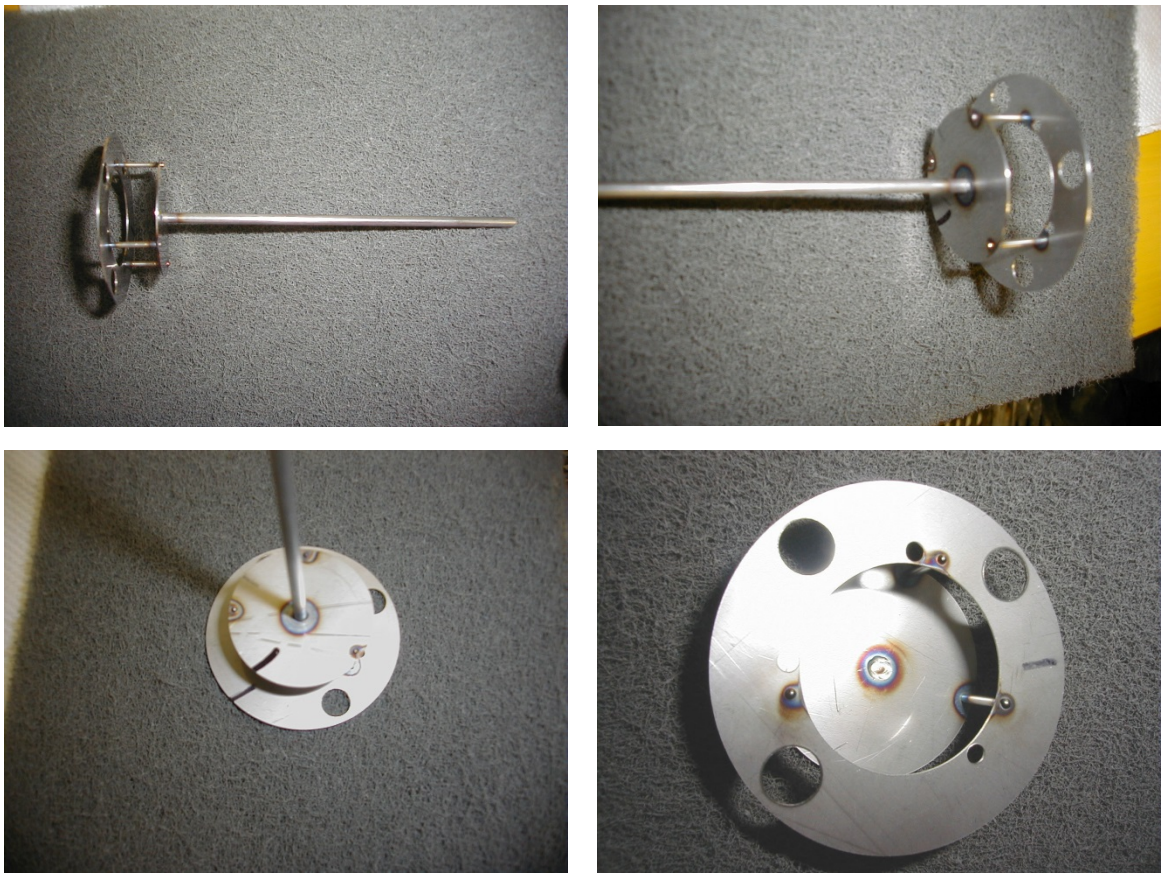

FIGURE 9 Photographs of a mechanical shield to prevent the contamination of the calciner head during calciner operation

Figure 10 shows the average condensation rates for experiments conducted with furnace set points of 200, 300, and 400°C. As expected, higher furnace temperatures correlate to higher condensation rates. However, it is interesting to note that increases in the initial water volume also correlate to higher condensation rates. This effect is attributed to the increase in the wetted surface area in the calciner cup with increased volume (i.e., more volume in the cup fills the cup higher). The increased wetted area means an increased area for heat transfer into the liquid phase, which leads to the increased condensation rate. At temperatures above 400°C, condensation rates are so great that a significant amount of the initial charge of liquid is evaporated before the furnace reaches its steady state temperature.

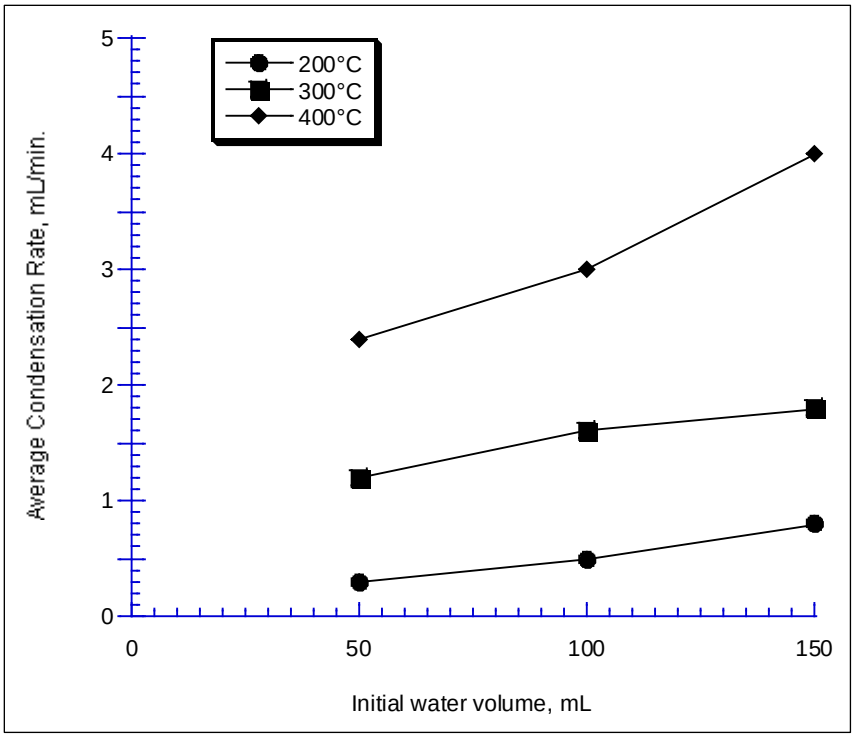

FIGURE 10 Average condensation rate (after reaching 100°C) vs. charge volume in static water tests

2.2.1.2 Dynamic Water Tests

Following the static tests, a series of dynamic tests was performed. For these tests, we placed an initial volume of liquid water into the calciner cup, screwed the cup into the calciner head, set the furnace to a known temperature, maintained a constant liquid level inside the cup by feeding water into the calciner cup at a rate equal to the condensation rate,[2] measured the solution and vapor temperatures, and collected condensate over time.

Figure 11 shows the results of these "dynamic" experiments. Again, as the furnace set point temperature increased, the condensation rate increased. In addition, higher steady-state volume in the calciner cup correlated with higher condensation rate.

Water evaporation experiments conducted in our calciner showed that the furnace temperature and the amount of liquid present in the calciner cup were both directly proportional to the achievable condensation rate. Therefore, we recommend that any future experiments be conducted at the maximum practical furnace temperature and with the maximum practical amount of liquid in the calciner cup.

---

2 This was done by measuring the volume of liquid fed to the system and the volume of liquid collected as condensate and adjusting the pump flow rate into the system so that the amount fed and the amount collected as condensate were equal. Typically, the rate at which material was fed increased until the system reached a steady state, as indicated in Figure 12.

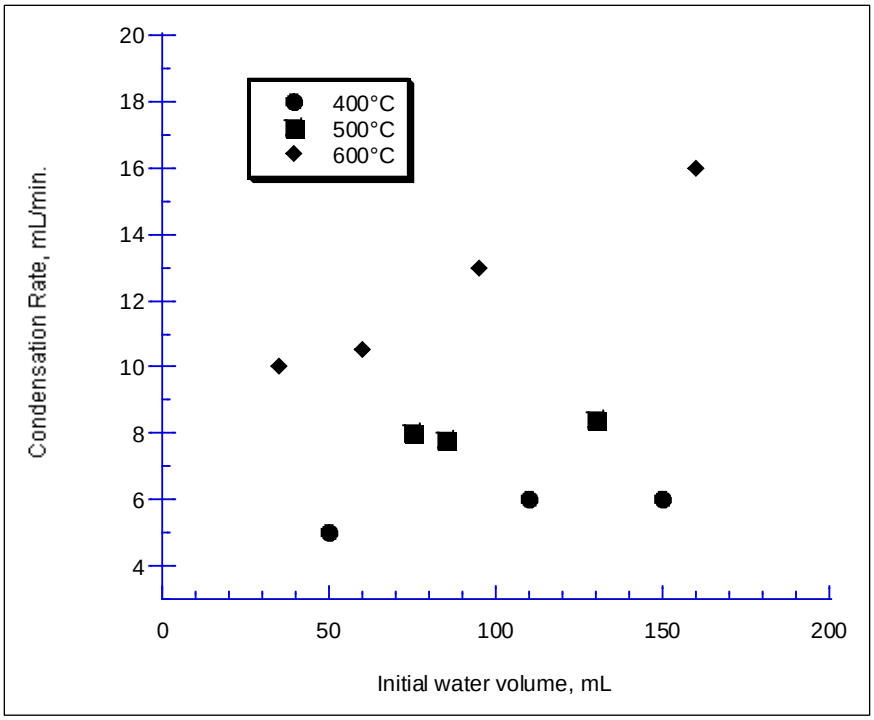

FIGURE 11 Condensation rate vs. furnace temperature and steady-state volume in the calciner cup

2.2.2 Effects of Equipment Modifications

The new calciner head with the 1-in. vent tube was installed and tested in our calciner system. The test process involved the direct calcination of UNH/nitric acid solution and was started with a furnace setting of 600°C. The condensation rate was measured at about 14 mL/min (0.84 L/hr) (Figure 12), and the feed rate was matched to the condensation rate.

The observed vapor temperature during an experiment has been shown to be a good indication of the stability of the process. If the vapor temperature is increasing or is stable, then the process is stable. On the other hand, if the vapor temperature is decreasing, then the process is unstable, and an overflow event is imminent.

As shown in Figure 12, the vapor temperature rose to about 270°C, and then rapidly decreased to about 240°C. The vapor temperature continued to decrease slowly to about 230°C. When the furnace setting was increased to 650°C, the condensation rate increased to about 17 mL/min (1.0 L/hr), and the feed rate was matched to it. As a consequence, the vapor temperature increased to about 250°C. The furnace setting was then increased to 700°C. The condensation rate increased to 18 mL/min (1.1 L/hr), while the vapor temperature increased to and stabilized at about 305°C.

Previous tests with a 0.5-in. vent tube calciner head showed that the system operated stably at 500°C and a feed rate of about 10 ml/min (0.6 L/hr). By contrast, the process was unstable at 600°C and a feed rate of 20 mL/min (1.2 L/hr).

These results show that the calciner system with the 1-in. vent tube is capable of stable operation at higher feed and condensation rates than with the 0.5-in. vent tube. The best performance was seen at 700°C, and the performance of the system at higher temperatures might be better yet. The upper temperature limit of the system can be determined by the volatilization of fission products, such as Tc and I.

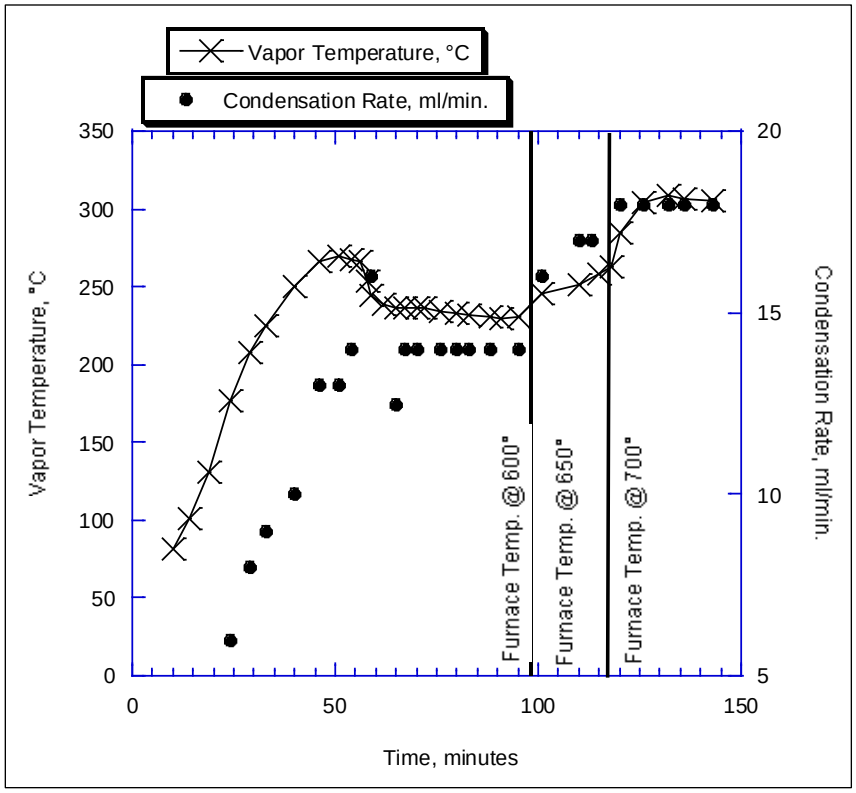

FIGURE 12 Vapor temperature and condensation rate as functions of time. These data were collected during a direct calcining of UNH in the 1-in. calciner head.

2.3 MECHANICAL SHIELD

The purpose of the mechanical shield was to protect the calciner head from contamination during splattering without any negative effect on the calciner operation. Previous direct calcination of UNH experiments resulted in splattering (Figure 13). Similar direct calcination experiments had been conducted with the mechanical shield (Figures 8 and 9) in place to test its effect on the calcination process and its effectiveness for preventing contamination.

The mechanical shield prevented contamination of the calciner head during the experiment, even though the shield itself was coated (Figure 14). The data in Figure 15 show that the stability of the evaporation process was not negatively affected by the presence of the shield. We concluded that the mechanical shield had no negative effect on the operation of the calciner, and was effective in preventing contamination and clogging of the calciner head. Based on these observations, we recommend that a mechanical shield be used in future tests.

FIGURE 13 Photograph showing contamination of the calciner head after a typical two-step direct calcination of UNH

a. **b.**

FIGURE 14 Photographs showing the effect of the mechanical shield: (a) mechanical shield covered with solids after the test and (b) the clean calciner head with the shield removed

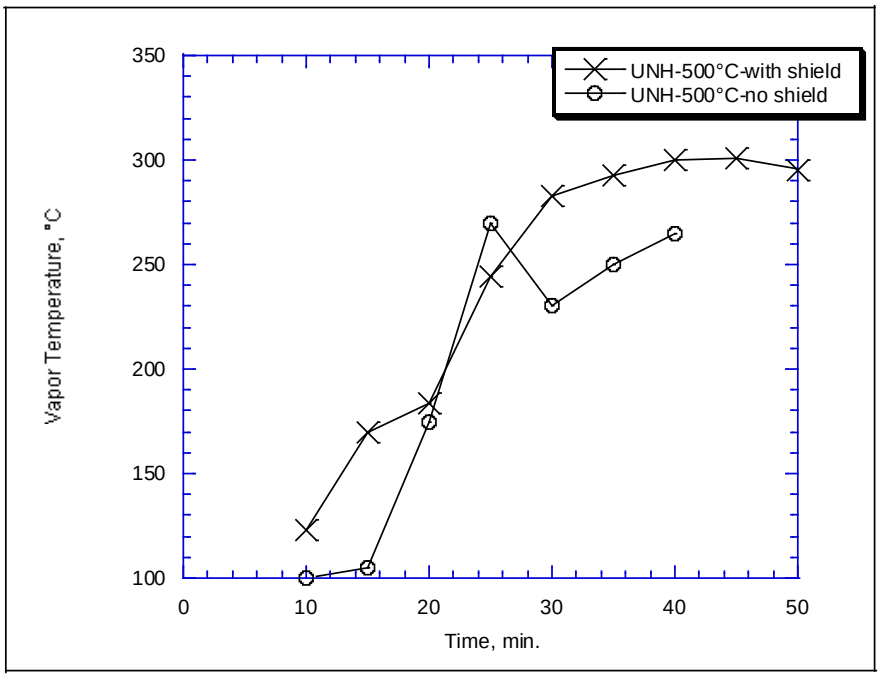

FIGURE 15 Vapor temperature as a function of time for tests in which UNH was fed into the calciner at 500°C with and without a shield

3 RESULTS AND DISCUSSION

3.1 DIRECT CALCINATION OF UNH/NITRIC ACID SOLUTIONS

Direct calcination is used to treat uranium waste solutions from ^{99}Mo production using HEU targets. Therefore, we attempted to modify the process to accommodate the larger amount of uranium waste if LEU targets were to be used. Two variations of this process were investigated: a high temperature, one-step process (where the evaporation and calcination are done essentially at the same time) and a two-step process (where the evaporation and calcination steps are clearly separated).

3.1.1 One-Step Process

One-step direct calcination of UNH solutions was evaluated because of its potential as a simple, rapid process. The UNH/nitric acid solution was fed into a hot (>900°C) calciner cup. Water and nitric acid were rapidly evaporated, and the UNH was rapidly calcined to uranium oxides.

In this experiment, the furnace was heated to 950°C, and 1 L of UNH/nitric acid solution was fed into the calciner cup at about 1 L/hr (17 mL/min). This solution contained 101 g U (213 g UNH, 0.42 moles). The solid product in the calciner cup at the end of the experiment appeared to be U_3O_8. The product had a density of about 1.1 g/mL (0.93 g U/mL). About 44 g of solid was recovered in the cup. Assuming that all of the solid was U_3O_8, only 37 g of the U was recovered in the calciner cup; the balance (64 g U) appeared as a black powder in the condenser (Figure 16) and condensate, and as a yellow powder coating the inside of the upper vent tube (Figure 17). The black powder was probably fine-grained U_3O_8 generated during the rapid calcination and carried out of the calciner cup by the generated gas stream. The yellow coating was probably caused by UNH solution being carried out of the calciner cup before contacting the hot surface.

Evidently, the high temperature and high feed rate led to very high gas velocities exiting the calciner cup. In addition, the rapid evaporation and calcination formed fine-grained uranium oxide powder. Because the uranium oxide product escaped from the calciner cup, the process is not recommended for further development.

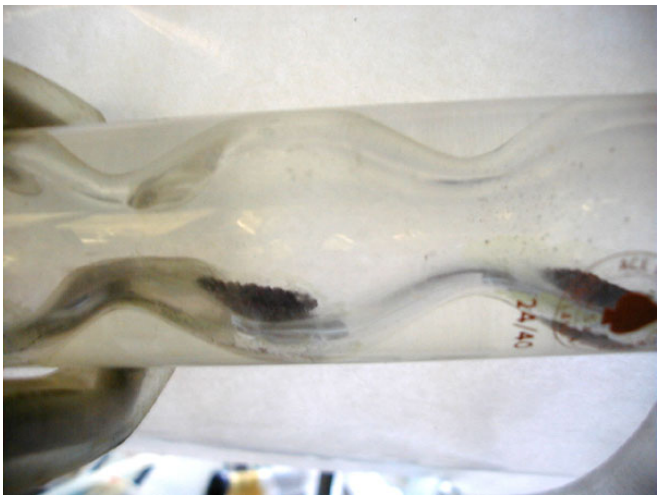

FIGURE 16 Black powder, thought to be U_3O_8, in the condenser after one-step calcination of UNH/nitric acid solution

FIGURE 17 Yellow powder found in the upper vent tube after one-step calcination of UNH/nitric acid solution

3.1.2 Two-Step Process

To adapt this established process for the use of LEU targets, we needed to optimize the operating conditions in our system and understand the chemical processes that occur.

3.1.2.1 Operating Conditions

As stated earlier, switching from HEU to LEU poses two challenges: (1) the amount of solution to be calcined will approximately double, requiring higher feed and evaporation rates, and (2) the amount of uranium per batch will increase by five to six times, requiring that more material be placed in each calciner cup. Two operating goals were thus set: an evaporation/condensation rate of at least 1.0 L/hr and at least 500 g of uranium in a cup.

The first challenge was addressed by increasing the temperature of the process and increasing the size of the vent tube, which allowed stable operation at the high temperatures. Our experience shows that the evaporation/condensation rate is a direct function of furnace temperature. For example, Figure 18 shows a plot of measured condensation rate as a function of furnace temperature in three experiments. These data clearly show that higher furnace temperatures correlate to higher condensation rates. The curves in Figure 18 labeled *UNH 1" vent* and *0.5" vent* show the effect of increasing the vent size on the attainable temperature and resulting condensation rates. The maximum evaporation/condensation rate achieved during stable operation of the two-step process was 18 mL/min (1.1 L/hr) at 700°C (Figure 18). This evaporation/condensation rate is greater than the operation criteria mentioned above. Therefore, the problem of waste solution volume apparently can be overcome.

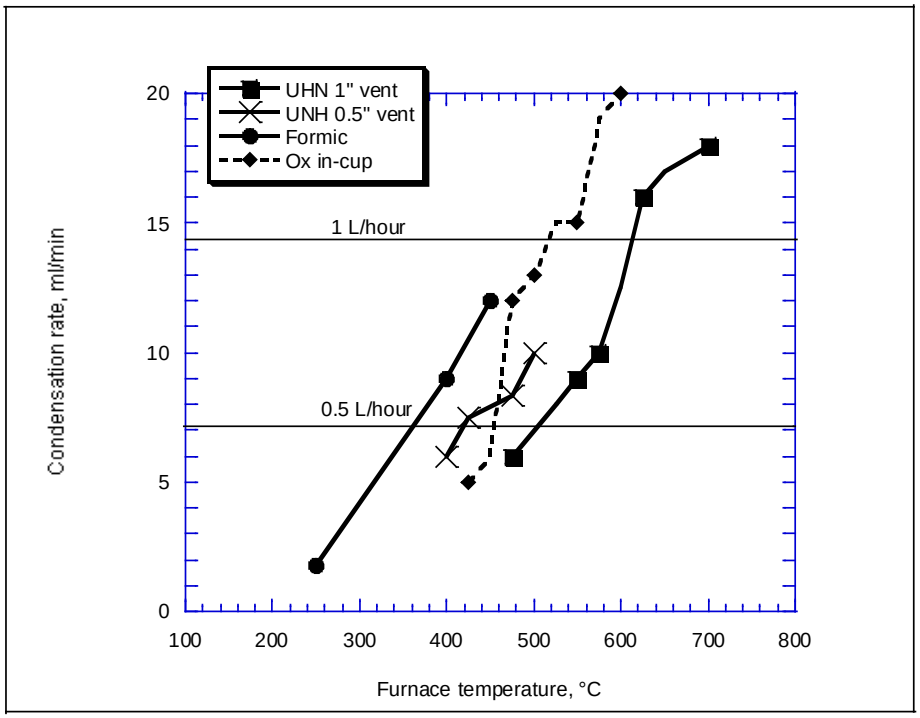

FIGURE 18 Measured condensation rate as a function of furnace temperature for three calciner tests

The second challenge, five times more uranium in each calciner cup, is formidable. While the calciner cup has sufficient volume to accommodate the increased amount of uranium, very little headspace remains to accommodate the observed sputtering during the conversion from molten UNH to UO_3. If the amount of sputtering can be reduced, or the resulting contamination and clogging of the calciner head can be controlled, then the two-step process can be adapted for processing the waste solutions from an LEU target.

The contamination and clogging of the calciner head resulting from sputtering were effectively solved by insertion of a mechanical shield placed between the calciner cup and the calciner head. The mechanical shield eliminated the need for headspace in the calciner cup. An experiment was conducted in which we fed 675 g U (1420 g UNH) into a 250-mL calciner can in 6.68 L of UNH/nitric acid solution (101 g U/L in 1 M HNO_3). At the end of the experiment, the can was about 90% full (225 mL) of a yellow-orange solid (Figure 19) with a mass of 839 g and a density of about 3.7 g/mL. If this material were UO_3, then it would have contained 698 g U. If this material were UNH, then it would have contained only 398 g U. Because 675 g of U was fed into the system, we believe that most of the product was UO_3. Therefore, the calciner contained about 3 g U/mL. It should be noted that significant sputtering was observed, and the collected condensate appeared to contain some UNH/nitric acid solution.

The solid deposited in the cup was calcined at 600°C for two hours, and generated brown gas (NO_2) during the first 15-30 min. A minimal weight loss of about 1 g was observed, and the calcined material was visually similar to the uncalcined material (Figure 20). The minimal change in the solid during calcining suggests that most of the U is transformed to UO_3 during the feed process. We theorize that much of the UNH/nitric acid solution contacts the side of the cup, and does not fall to the cup bottom. The cup side is probably at a temperature approaching that of the furnace (700°C), which would lead to oxidation of the UNH. The results of this experiment show that 675 g of U was loaded into the cup at a density of about 3.0 g U/mL. This is a significantly higher density than has been observed in the past, suggesting that the number of waste cans needed will be less, and each can's heat will be greater than previously calculated.

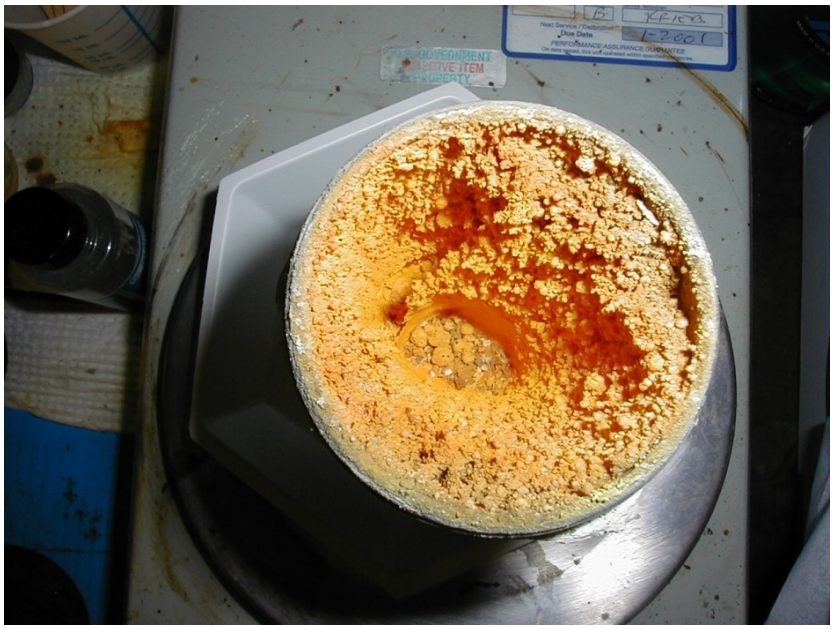

FIGURE 19 Photograph of the calciner cup after feed of 675 g U (1420 g UNH) in 6.68 L of 1 M nitric acid solution

FIGURE 20 Photograph of the calciner cup after calcination at 600°C for 2 hours of the material shown in Figure 19

3.1.2.2 Chemical Processes

A two-step UNH calcination experiment was conducted in standard ground joint laboratory glassware to allow us to directly observe the chemical process. The reaction vessel was a 500-mL round-bottom boiling flask. A heating mantle was used to maintain the test temperature. The UNH/HNO_3 solution had a volume of 200 mL and contained 42.6 g of UNH (20.2 g U, 0.09 moles). This solution was placed into the reaction vessel, and the vessel was heated to the boiling point of the liquid (110–120°C). A yellow and black solid was formed on the sides of the reaction vessel during the evaporation step, and a small amount of brown gas (presumably NO_2) was generated during the evaporation. Figure 21 shows the yellow and black solid on the side of the reaction vessel deposited during the feed step. The temperature of the boiling liquid was 110–120°C; the sides of the vessel not in contact with the liquid may have been at a temperature high enough to lead to denitration of the UNH (about 250°C). As the evaporation continued, a highly viscous fluid formed and finally boiled to dryness, leaving a porous, yellow solid residue. Figure 22 shows a view of the reaction vessel highlighting the yellow, porous solid. A significant amount of NO_2 evolved during the final stage of evaporation, as the rate of denitration increased. As the last of the liquid boiled away, sputtering was observed. The evolution of the NO_2, appearance of the final solid product, and splattering were consistent with the observations made earlier during calciner tests in our laboratory.

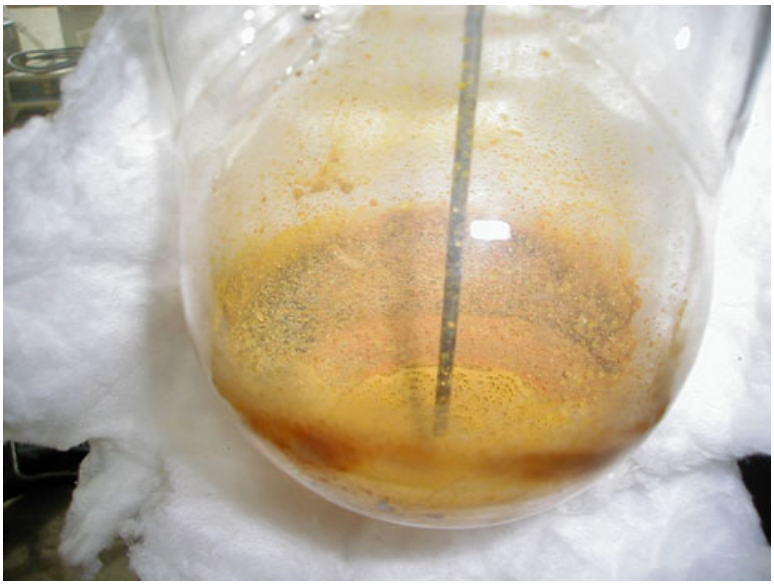

FIGURE 21 Photograph of the reaction flask after feed was stopped and all of the liquid was boiled away. Note the splatter on the side of the vessel.

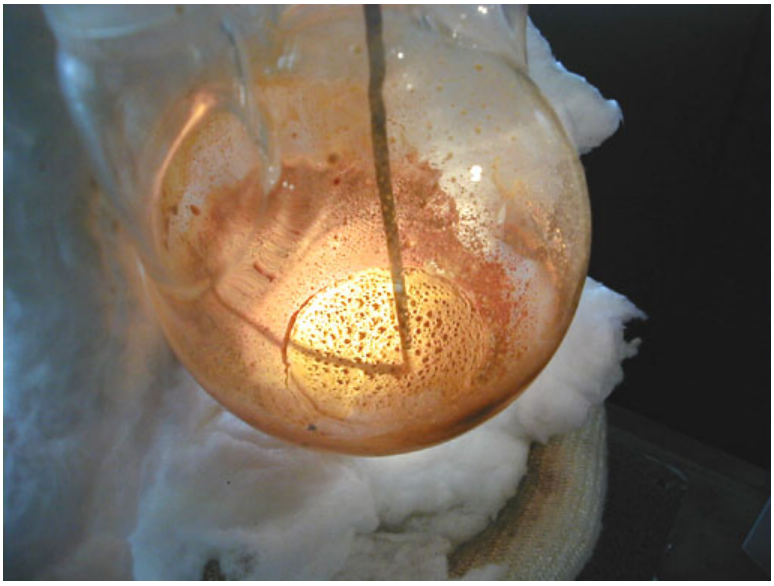

FIGURE 22 Second photograph of the reaction flask after feed was stopped and all of the liquid was boiled away. Note the porous, yellow solid in the bottom of the vessel.

3.2 CHEMICALLY ASSISTED CALCINATION-DENITRATION

Due to the potential problems associated with sputtering during the two-step calcination of UNH, an alternative process is needed. Chemically assisted denitration of the waste solution was evaluated in the hope that elimination of nitrate from the liquid phase in the calciner would eliminate the high viscosity liquid and, therefore, limit sputtering. Several reagents (hydrogen peroxide, formic acid, and oxalic acid) were used to reduce the nitrate to NO_2 gas, and at the same time, to precipitate the uranium as uranyl salts. Evaluation of each of these reagents showed that the use of oxalic acid was most promising.

3.2.1 Peroxide

Uranyl peroxide is known to precipitate as complex hydrates when hydrogen peroxide is added to acidic uranyl salt solutions [CHERNYAEV-1966]. Our aim was to use this precipitation reaction to separate the uranium from the waste solutions and to calcine the uranyl peroxide to UO_3 without the sputtering observed during the direct calcination process.

The goal for this part of the study was to precipitate uranyl peroxide outside the calciner at room temperature. The precipitate would then be separated from the supernatant by decanting or filtration. This process would generate two feeds for the calciner: (1) a dilute supernatant that could be rapidly evaporated in the calciner and (2) a solid containing most of the uranium that could be placed directly into the calciner cup and converted to oxides.

A small-scale precipitation of uranyl peroxide was done at room temperature to determine the feasibility of such processes for the treatment of UNH/nitric acid solutions. Addition of 8.6 g of 30% H_2O_2 solution (2.6 g H_2O_2, 0.08 moles) to about 50 ml of UNH solution (8.7 g UNH, 4.2 g U, 0.02 moles) resulted in the precipitation of a fine-grained light yellow solid, presumably uranyl peroxide. The slurry separated in a few hours (Figure 23).

The fine-grained uranyl peroxide precipitate could not be cleanly separated from the supernatant by decanting. Therefore, the slurry was vacuum filtered through a 0.45-µm membrane (90-mm diameter). The filter was completely clogged in a few minutes. The remaining filter cake contained a significant amount of water and was very “sticky,” as well as difficult to recover. This problem might be minimized if the solid product could be separated from the supernatant by decanting, and then dried before being placed in the calciner.

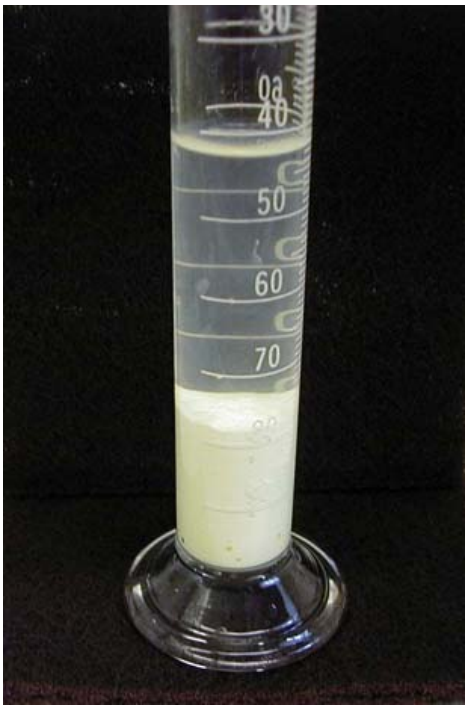

FIGURE 23 Photograph of small-scale hydrogen peroxide test after settling for several hours

A larger scale precipitation of uranyl peroxide was performed to generate enough supernatant to test the feasibility of evaporation/calcination. The filtered supernatant was found to contain about 0.3 g/L uranium, as determined by inductively coupled plasma-atomic emission spectroscopy (ICP-AES). About 1.8 L of this supernatant was fed into the calciner at 400–650°C at the rate of about 20 mL/min (1.2 L/hr). Foaming was observed at furnace temperatures above about 600°C. Degradation of H_2O_2 and the resulting generation of O_2 gas inside the calciner may have been responsible for the foaming. In operation with solutions from irradiated targets, such foaming would likely contaminate equipment with any fission products in the supernatant. The foaming problem might be minimized by treatment of the peroxide-containing solutions to degrade residual peroxide before calcination, and the amount of hydrogen peroxide used during the precipitation could be minimized.

Therefore, two problems were observed during the precipitation of U from UNH solutions as uranyl peroxide: (1) the solid product was not filterable, and (2) the supernatant foamed during calcination. Because of these problems, we recommend that the peroxide-assisted calcination of UNH/nitric acid solutions should not be further developed.

3.2.2 Formic Acid

A large body of data exists on denitration by formic acid. However, the wide range of experimental conditions and the multiple oxidation states of nitrogen have led to inconsistent results [MERZ-1986]. Several reactions have been suggested [CECILLE-1986, TAYLOR-1993]

$$UO_2(NO_3)_2 + HCOOH \rightarrow UO_3 + 2NO_2 + CO_2 + H_2O \quad (1)$$

$$UO_2(NO_3)_2 + 3HCOOH \rightarrow UO_3 + 2NO + 3CO_2 + 3H_2O \quad (2)$$

$$UO_2(NO_3)_2 + 4HCOOH \rightarrow UO_3 + N_2O + 4CO_2 + 4H_2O \quad (3)$$

$$UO_2(NO_3)_2 + 2HCOOH \rightarrow UO_3 + NO + NO_2 + 2CO_2 + 2H_2O \quad (4)$$

$$UO_2(NO_3)_2 + 5HCOOH \rightarrow UO_3 + N_2 + 5CO_2 + 5H_2O \quad (5)$$

The oxidation of formic acid by nitric acid is a highly complex set of reactions. The reaction rate and the rate-controlling step have been shown to change significantly with changes in formic acid and nitric acid concentrations. For example, the rate-controlling step in dilute nitric acid (<2.5 M) is a reaction between formic acid and nitrous acid, while the rate-controlling step in concentrated nitric acid is a reaction between formic acid and NO^+ [LONGSTAFF-1954]. If the nitric acid concentration in the cup increases during the early part of a test, then the rate-controlling step and the reaction rate might be expected to change when the nitric acid concentration reaches some threshold value. Such sudden change in the reaction might result in unstable or uncontrollable reaction rates.

Some workers have reported an induction period for the commencement of the denitration reaction by formic acid [CECILLE-1986]. The cause of this induction time is thought to be the need for a sufficient concentration of nitrous acid [KUBOTA-1979]. The reaction can begin only after the nitrous acid concentration has built up from the reaction of NO and nitric acid. Such behavior could present difficulties with respect to reaction or process control.

This induction period is thought to be negligible at temperatures near or above 100°C [BRADLEY-1972, CECILLE-1986]. The reactions in this study were carried out at the boiling point of the nitric acid solution (110–120°C). Therefore, the induction time should not be a factor in controlling reaction rates in the proposed process.

Formic-acid-assisted denitration of the UNH/nitric acid solutions using our calciner proved problematic. Several attempts at continuous feed of UNH solution and formic acid into the calciner resulted in unstable operation. Unstable operation was reflected as increasing vapor temperatures and overflow of liquids and solids out of the calciner cup into the condenser. Such unstable operation was observed under a wide range of operating conditions: temperatures from 300°C to 650°, condensation rates between 10 and 20 ml/min (0.6 and 1.2 L/hr), UNH feed rate to formic acid feed rate ratios from 6:1 to 2:1, and calciners with either 0.5- or 1-in. vent tubes.

The observed process instability cannot be satisfactorily explained at this time. Further research might lead to an understanding of the problem and possible solutions. However, due to the complex chemistry of the system and its unpredictable performance, we recommend that the work with formic acid be stopped.

3.2.3 Oxalic Acid

Uranyl oxalate trihydrate [$UO_2(C_2O_4)\bullet 3H_2O$] readily precipitates from uranyl salt solutions upon addition of oxalic acid. The precipitation is nearly complete, because uranyl oxalate is less than 1 wt% soluble (at 25°C) in the 1 M HNO_3 used in this study [CHERNYAEY-1966]. The solubility is about 5 times higher at 100°C [VDOVENKO-1960]. The out-of-cup precipitations in this study were done at room temperature, and the in-cup precipitations were done at 110–120°C. The precipitation is optimized when a small excess of oxalic acid is present [CHERNYAEY-1966].

Thermal decomposition of precipitated uranyl oxalate can yield either UO_2 or UO_3 [KATZ-1951]. The dioxide is formed when oxalate is oxidized, and uranium is reduced from +6 [$(UO_2)^{2+}$] to +4 (UO_2). The trioxide is formed when oxalate is oxidized, and nitrogen is reduced from +5 [$(NO_3)^-$] to +4 (NO_2). The mixed-valence compound U_3O_8 is also formed.

In this study, uranyl oxalate was precipitated in two modes: out-of-cup at room temperature and in-cup at 110–120°C. Both of the precipitations were followed by thermal decomposition in the calciner.

3.3 OUT-OF-CUP PRECIPITATION

The approach for this part of the study was to precipitate uranyl oxalate outside the calciner at room temperature. The precipitate was separated from the supernatant by decanting or filtration. This process generated two feeds for the calciner: (1) a dilute supernatant that could be rapidly evaporated in the calciner and (2) a uranium-rich solid that could be placed directly into the calciner cup and decomposed to oxides.

Addition of 3.78 g of solid oxalic acid dihydrate (0.03 moles) to about 50 ml of the UNH solution (8.96 g UNH, or 4.25 g U, 0.02 moles) resulted in the precipitation of a fine-grained yellow solid, presumably uranyl oxalate. An excess of oxalic acid, 0.03 moles, was added to 0.02 moles of uranium. Use of solid oxalic acid avoided the extra water that would need to be added if the oxalic acid were introduced in solution.

The uranyl oxalate precipitate settled by gravity in about an hour (Figure 24). We filtered the precipitate/supernatant slurry through a 0.45-µm membrane vacuum filter (90 mm diameter). The filtration was rapid and produced a dense, filter cake that was easily removed from the filter.

FIGURE 24 Photograph of small-scale oxalic acid test after settling for one hour

The filtered supernatant was found to contain about 3.8 g U/L, as determined by ICP-AES. We expected that this dilute solution could be evaporated in the calciner without significant foaming or sputtering. In comparison, the UNH solutions that were directly calcined typically contained about 100 g U/L. A small amount (about 10 ml) of the decanted supernatant was placed in a beaker and slowly boiled to dryness to simulate its behavior during calcining. The boiling was steady, and no “bumping” was observed until only a few milliliters of liquid remained. A yellow residue was formed that sputtered until dry.

Therefore, the out-of-calciner precipitation of uranium from UNH waste solutions with oxalic acid generated a uranium-rich solid and a uranium-poor supernatant. The solid could be easily dried or filtered and added directly to the calciner. The behavior of the supernatant during calcining has not been determined at this time, but is expected to be acceptable.

Based on the results of these out-of-cup experiments at room temperature, the chemical reactions involved in the oxalate process are easily controlled, and the products are easily separated and calcined. Drawbacks of this process include the number of steps and amount of hands-on work needed. These drawbacks might prove to be important when processing irradiated targets in a hot cell facility.

3.4 IN-CUP PRECIPITATION

The objective for these experiments was to conduct denitration and precipitation inside the heated calciner cup, and to simultaneously reduce the volume of the waste by evaporation. The denitration, precipitation, and evaporation take place at the boiling point of the solution present in the cup; this temperature is generally 100–120°C. After a batch of solution has been fed, and the precipitate has been evaporated to dryness, the temperature inside the calciner cup increases. The resulting calcination of the uranyl oxalate yields a mixture of uranium oxides. One advantage of this approach is that the entire process occurs in the calciner cup, and that after these operations are complete, the cup can be sealed and stored directly. This procedure minimizes handling of the waste and simplifies hot cell operations relative to the out-of-cup process.

In our initial in-cup oxalate experiments, we placed an excess of solid oxalic acid in a calciner cup, fed about 100 mL of the UNH/nitric acid solution into the cup, and raised the furnace temperature to 600°C. As soon as acid and water vapors appeared in the condenser, the UNH/nitric acid solution was continuously fed into the calciner at a rate to match the observed condensation rate. In these experiments, 1.0 L of the solution was fed at a rate of about 0.6 L/hr. Five experiments were conducted: two with 2.2 moles of oxalic acid per mole of uranium, and three with 1.1 moles of oxalic acid per mole of uranium. In each experiment, the denitration, precipitation, and evaporation steps proceeded stably, and the calcination step (600°C for two hours) proceeded without excessive sputtering. The calcined product in each experiment, regardless of the amount of oxalic acid used, was U_3O_8 with an in-cup density of about 1.5 g/ml (1.3 g U/ml). This measured density shows that this process would allow about 260 g U in a 250 mL calciner cup, assuming 90% fill.

While these experiments demonstrated the feasibility of the uranyl oxalate precipitation process, two important questions remained regarding the in-cup precipitation of uranyl oxalate: 1) what is the general sequence of reactions during this process, and 2) what factor limits the amount of material that can be placed in a cup? Two experiments in which UHN/nitric acid was fed into heated glass vessels were conducted to address these questions.

The reaction sequence was investigated in an experiment in which 25.2 g of oxalic acid dihydrate (0.20 moles) was placed in the reaction vessel, and 200 mL of a UNH/HNO_3 solution (42.1 g UNH, 20.0 g U, 0.08 moles) was added. A small amount of yellow solid, presumably uranyl oxalate, and a larger amount of white solid, presumably oxalic acid, were observed prior to heating (Figure 25). The mixture was then heated to boiling, resulting in the suspension of the solids (Figure 26). As the reaction proceeded, an increasing amount of brown gas was noted (Figures 27 and 28). The brown gas, presumably NO_2, was probably formed by the reduction of NO_3^- by oxalic acid. When all of the liquid had evaporated, the temperature of the reaction vessel had increased, up to about 450°C. The resulting solid was primarily yellow, with some orange and white (Figure 29). We expect that the yellow solid was uranyl oxalate and/or uranyl nitrate, the orange solid was UO_3, and the white was unreacted oxalic acid. As the temperature of the reaction vessel increased, the solid became increasingly black (Figure 30). The black powder was thought to be UO_2 and/or U_3O_8 formed by the decomposition of uranyl oxalate.

FIGURE 25 Photograph of the reaction flask containing solid oxalic acid and UNH/HNO_3 solution before heating. Note that some of the oxalic acid remains and has not reacted to form uranyl oxalate.

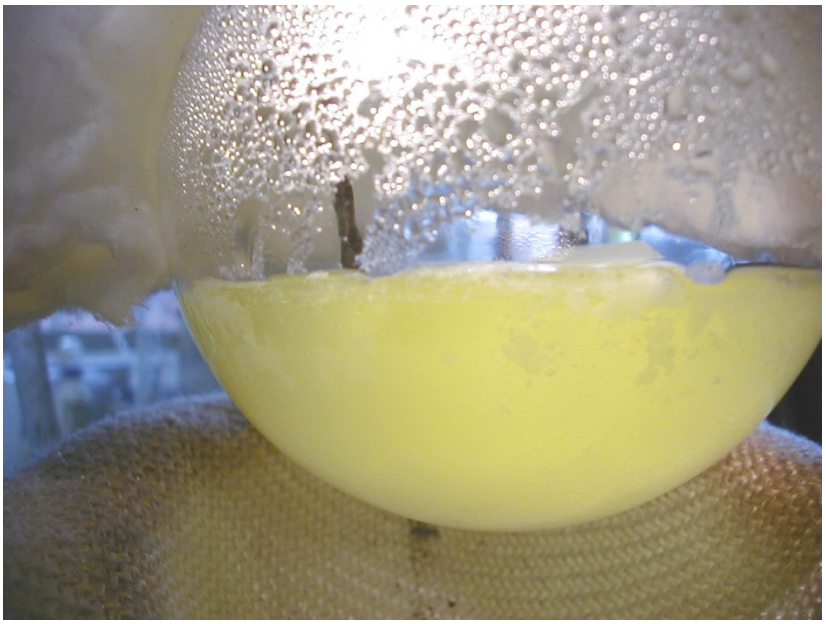

FIGURE 26 Photograph of reaction flask after boiling had begun. Note that solid oxalic acid and solid uranyl oxalate are suspended in the solution as a result of the boiling.

FIGURE 27 Photograph of reaction flask during evaporation. A small amount of brown gas, presumably NO_2, is being generated.

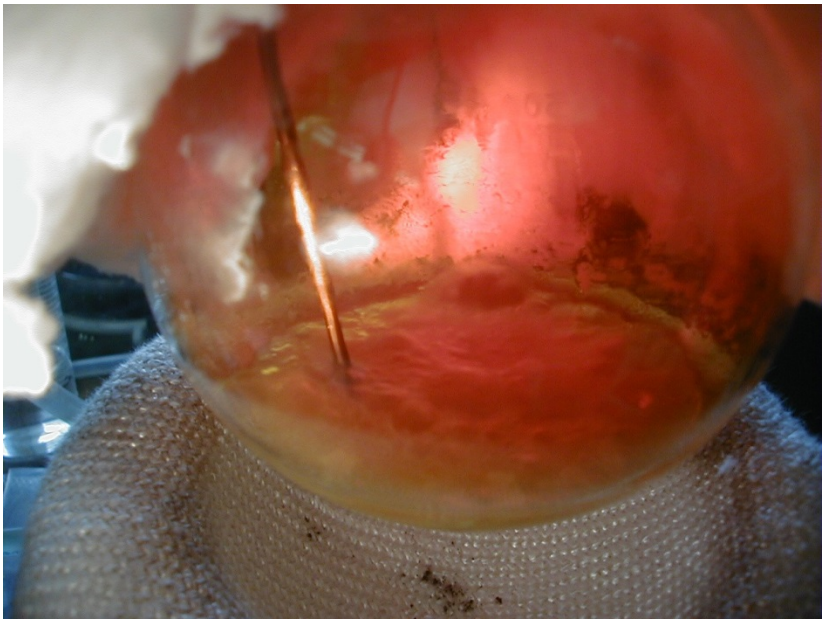

FIGURE 28 Later photograph of reaction flask during evaporation. Note that the amount of NO_2 is significantly higher than the photograph in Figure 27.

FIGURE 29 Photograph of reaction flask immediately after all of the liquid had evaporated

FIGURE 30 Photograph of the reaction vessel some time after all of the liquid had evaporated. The temperature of the system reached about 450°C.

A second in-cup experiment was conducted to determine what limits the amount of material that can be placed in a calciner cup using the uranyl oxalate precipitation process. In this experiment, 113 g of oxalic acid dihydrate (0.90 moles) was placed in a 200-mL glass reaction vessel, and 100 ml of UNH/nitric acid solution (17.5 g UNH, 8.3 g U, 0.03 moles U) was initially added (Figure 31). The density of this initial slurry was about 1.4 g/mL (Table 1). The density was determined by weighing the contents of the vessel and estimating its volume. An additional 1700 mL (297 g UNH, 141 g U, 0.59 moles U) of the UNH/nitric acid solution was fed to the reaction vessel. The feeding was interrupted at several stages to measure the density of the mixture in the reaction vessel (Table 1). The density increased from the initial 1.4 g/mL to as high as 2.9 g/mL at the end of the feed (Figure 32). The solid was calcined at about 450°C for 2 hours. During the first hour of the calcination, a brown gas, presumably NO_2, evolved (Figure 33). The calcined material (Figure 34) had an in-cup density of about 2.1 g/mL.

These results show that the amount of uranium that can be precipitated in a cup as uranyl oxalate was limited by the amount of oxalic acid that could be placed in the cup at the beginning of the experiment. Based on these results, 320 g U could be placed in a calciner cup, assuming a 90% fill (225 mL volume) and an oxalic acid-to-uranium molar ratio of 1.1:1.

TABLE 1 Density of slurry in the reaction vessel at various points during the experiment

Volume Solution Added, mL	Amount U Added, g	Moles U Added	Measured Density, g/mL
100	10	0.04	1.4
600	60	0.25	1.9
1300	130	0.55	2.5
1800	180	0.76	2.9
After calcining			2.1

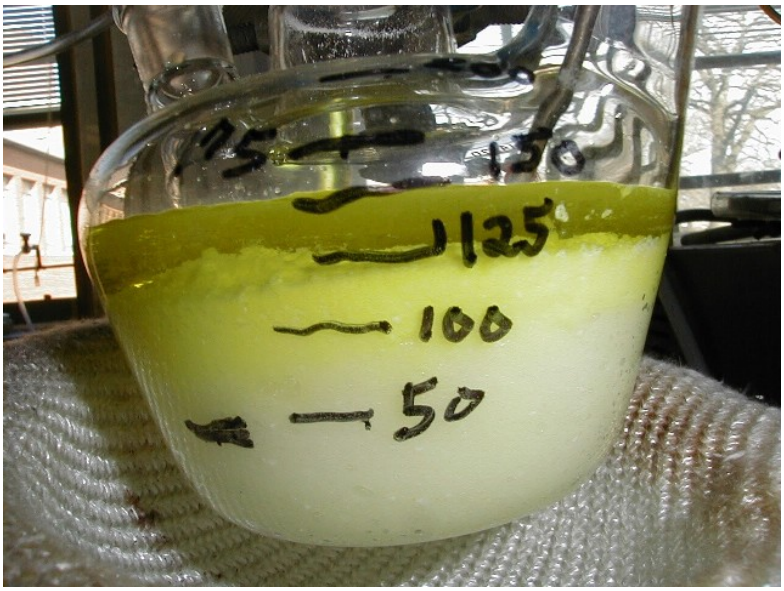

FIGURE 31 Photograph of the reaction flask after the initial addition of 113 g of oxalic acid and 100 mL of UNH/nitric acid solution

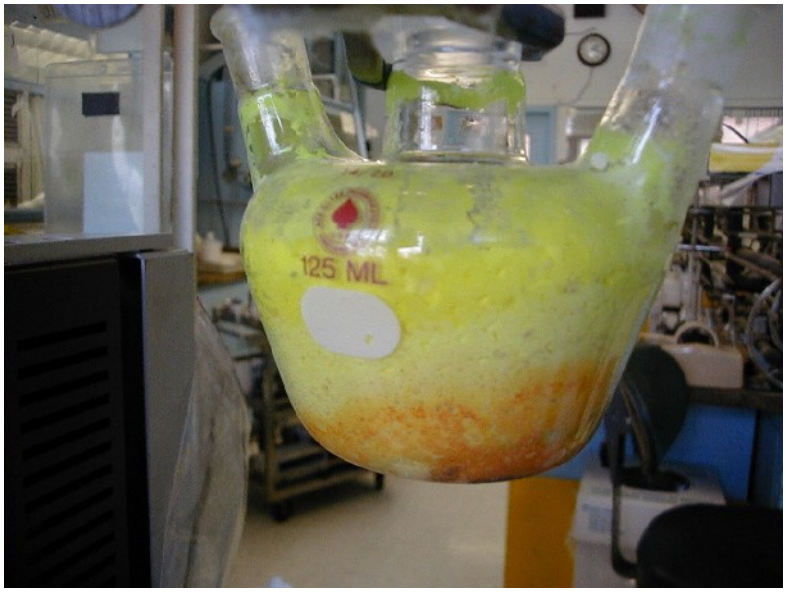

FIGURE 32 Photograph of reaction vessel after addition of 1800 mL of UNH/nitric acid solution

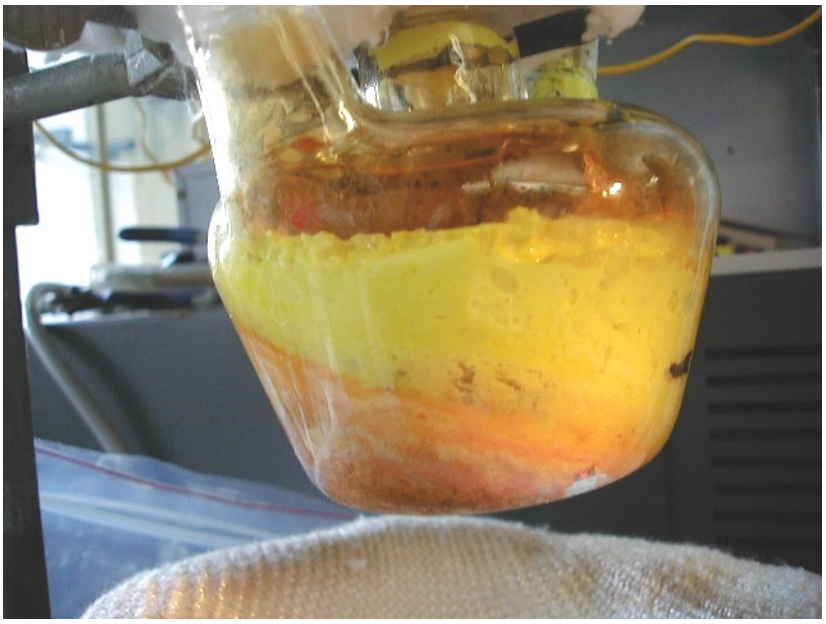

FIGURE 33 Photograph of reaction vessel during calcination; note evolution of NO_2

FIGURE 34 Photograph of reaction vessel after calcination

Further work on this process will concentrate on describing the chemical reactions that occur during the precipitation and calcination reactions. The following reaction is thought to be important during precipitation:

$$UO_2(NO_3)_2 + H_2C_2O_4 \rightarrow UO_2C_2O_4 + 2HNO_3 \quad (6)$$

The following reactions are thought to be important during the calcinations:

$$UO_2C_2O_4 \rightarrow UO_3 + CO_2 + CO \quad (7)$$

$$UO_2C_2O_4 \rightarrow UO_2 + 2CO_2 \quad (8)$$

$$H_2C_2O_4 + 2HNO_3 \rightarrow 2CO_2 + 2H_2O + 2NO_2 \quad (9)$$

$$UO_2 + 2UO_3 \rightarrow U_3O_8 \quad (10)$$

$$3UO_2 + O_2 \rightarrow U_3O_8 \quad (11)$$

Several experiments should be planned for uranyl oxalate precipitation to test the effects of the uranium-to-oxalic acid ratio, oxygen fugacity, and calcination temperatures. Reaction products should be collected and analyzed to determine which reactions are most important under these reaction conditions.

The oxalic acid in-cup process was shown to be a feasible alternative to direct calcination for the treatment of UNH/nitric acid waste solutions from the dissolution of LEU targets used for ^{99}Mo production. Our results suggest that about 320 g U could be placed in a calciner cup using this process. The chemistry of this process is not well known, and needs to be described.

4 CONCLUSIONS

The design, fabrication, and testing of our calciner system revealed several features that should be applied to a production calcination operation. First, the maximum attainable feed rate is proportional to the furnace temperature; therefore, any evaporation/calcination process should be operated at the maximum practical temperature. Second, a calciner head equipped with a larger vent tube allows for stable operation at higher feed rates; therefore, any calciner system should be designed with the largest vent tube that is practical. Finally, a mechanical shield placed between the calciner head and the calciner cup prevented contamination and plugging of the calciner head, and should be included in future calciner designs.

The evaluation of direct calcination processes led to recommendations that no more work be done on the one-step process, and that the development of the two-step process should be continued. The high-temperature, one-step process resulted in contamination of the entire calciner system with fine-grained, uranium-rich powder. The one-step process was shown to allow relatively high feed rates during stable operation. In addition, as much as 375 g U could be placed in one 250-mL calciner/waste cup with this process.

The evaluation of chemically assisted calcination led to the conclusion that only the in-cup oxalic acid process should be investigated further. The peroxide process yielded a precipitate that was difficult to filter and a supernatant that was difficult to evaporate. Therefore, the peroxide process was not recommended for further work. The formic acid process could not be operated stably and was eliminated from further consideration. The oxalic acid process was recommended, although a better understanding of its chemistry is needed.

This work showed that the two-step direct calcination and the in-cup oxalic acid processes are the best approaches for the treatment of UNH/nitric acid waste solutions from dissolution of LEU targets for ^{99}Mo production.

5 REFERENCES

[BRADLEY-1972] R.F. Bradley and C.B. Goodlett, *Denitration of Nitric Acid Solutions by Formic Acid*, DP 1299 (June 1972).

[CHERNYAEV-1966] I.I. Chernyaev, *Complex Compounds of Uranium*, Israel Program for Scientific Translations, Jerusalem (1966).

[CECILLE-1986] L. Cecille and M. Kelm, "Chemical Reaction Involved in the Denitration Process with HCOOH and HCHO," L. Cecille and S. Halazovich [Eds.], *Denitration of Radioactive Liquid Waste, Radioactive Waste Management Series of the Commission of the European Communities*, Graham and Trotman, Norwell, MA, p. 17 (1986).

[KATZ-1951] Joseph J. Katz and Eugene Rabinowitch, *The Chemistry of Uranium*, Part I, *The Element, Its Binary and Related Compounds*, McGraw Hill Book Company, Inc., New York, 1951, http://tocs.ulb.tu-darmstadt.de/89791010.pdf.

[KUBOTA-1979] Masumitsu Kubota, Isoo Yamaguchi, and Haruto Nakamura, "Effects of Nitrite on Denitration of Nuclear Fuel Reprocessing Waste with Organic Reductants," J. Nucl. Sci. Technol. 16 (6), 426-433 (1979).

[LONGSTAFF-1954] J.V.L. Longstaff and K. Singer, "The Kinetics of Oxidation by Nitric Acid and Nitrous Acid," J. Chem. Soc. 2604-2617 (1954).

[MERZ-1986] E.R. Merz, "Overview of the Application of Denitration in the Nuclear Field," L. Cecille and S. Halazovich [Eds.], *Denitration of Radioactive Liquid Waste, Radioactive Waste Management Series of the Commission of the European Communities*, Graham and Trotman, Norwell, MA, p. 1 (1986).

[TAYLOR-1993] P.A. Taylor, D.E. Kurath, and R. Guenther, *Evaluation of Nitrate Destruction Methods*, DOE Report MWIP-10, Oak Ridge National Laboratory (March 30, 1993).

[VDOVENKO-1960] V.M. Vdovenko, *Chemistry of Uranium and Transuranic Elements*, Publishing House of the Academy of Sciences, USSR, Moscow, Leningrad (1960).

This page is intentionally left blank.

Nuclear Engineering Division
Argonne National Laboratory
9700 South Cass Avenue, Bldg. 208
Argonne, IL 60439-4854

www.anl.gov

Argonne National Laboratory is a U.S. Department of Energy
laboratory managed by UChicago Argonne, LLC