ANL/NE-16/3

Development and Validation of Methodology to Model Flow in Ventilation Systems Commonly Found in Nuclear Facilities – Phase I

Specialized Technical Support to the Nuclear Safety Research and Development Program

Nuclear Engineering Division

About Argonne National Laboratory
Argonne is a U.S. Department of Energy laboratory managed by UChicago Argonne, LLC under contract DE-AC02-06CH11357. The Laboratory's main facility is outside Chicago, at 9700 South Cass Avenue, Argonne, Illinois 60439. For information about Argonne and its pioneering science and technology programs, see www.anl.gov.

DOCUMENT AVAILABILITY

Online Access: U.S. Department of Energy (DOE) reports produced after 1991 and a growing number of pre-1991 documents are available free via DOE's SciTech Connect (http://www.osti.gov/scitech/)

Reports not in digital format may be purchased by the public from the National Technical Information Service (NTIS):
U.S. Department of Commerce
National Technical Information Service
5301 Shawnee Rd
Alexandria, VA 22312
www.ntis.gov
Phone: (800) 553-NTIS (6847) or (703) 605-6000
Fax: (703) 605-6900
Email: **orders@ntis.gov**

Reports not in digital format are available to DOE and DOE contractors from the Office of Scientific and Technical Information (OSTI):
U.S. Department of Energy
Office of Scientific and Technical Information
P.O. Box 62
Oak Ridge, TN 37831-0062
www.osti.gov
Phone: (865) 576-8401
Fax: (865) 576-5728
Email: **reports@osti.gov**

Disclaimer
This report was prepared as an account of work sponsored by an agency of the United States Government. Neither the United States Government nor any agency thereof, nor UChicago Argonne, LLC, nor any of their employees or officers, makes any warranty, express or implied, or assumes any legal liability or responsibility for the accuracy, completeness, or usefulness of any information, apparatus, product, or process disclosed, or represents that its use would not infringe privately owned rights. Reference herein to any specific commercial product, process, or service by trade name, trademark, manufacturer, or otherwise, does not necessarily constitute or imply its endorsement, recommendation, or favoring by the United States Government or any agency thereof. The views and opinions of document authors expressed herein do not necessarily state or reflect those of the United States Government or any agency thereof, Argonne National Laboratory, or UChicago Argonne, LLC.

***Report No.**

Development and Validation of Methodology to Model Flow in Ventilation Systems Commonly Found in Nuclear Facilities

Specialized Technical Support to the Nuclear Safety Research and Development Program

Philip Strons, James L. Bailey, John Davis, James Grudzinski, and John Hlotke
Nuclear Engineering Division, Argonne National Laboratory

March 2016

1. Introduction

Understanding and modeling of particulate transport has importance related to safety in ventilated environments that contain hot cells, gloveboxes, and fume hoods. In particular, good modeling of the airflow in these spaces is required to understand areas of stagnation where particles drop out of the free stream and accumulate. This accumulation of particulate can cause either contamination and/or higher than acceptable local dose levels. Additionally, although standards are in place for required glove box flow conditions, there exists a question amongst the community of whether or not there is sufficient analytical support (either calculated or by field tests) for the flow conditions specified in these glovebox standards, particularly for accident scenarios.

It is known that multiple sites across the DOE complex take credit for hot cells, gloveboxes, and/or hoods in their safety basis for providing a defense-in-depth benefit for both onsite and offsite releases. By providing confinement of radioactive materials, such features serve to reduce direct doses to facility workers and mitigate the consequences to the environment due to an uncontrolled release. Each of these features has access points that interface with the personnel space. Understanding how air flow behaves at these access points is of great interest to those performing hazard analysis.

Computational Fluid Dynamics (CFD) can be used to analyze and model the flows in hot cells and glove boxes as a way to confirm operation. While CFD capability continues to advance, there are still important modeling assumptions that are left to the analyst's discretion. These are most notably the choice of the turbulence models, mesh structure, and wall boundary condition assumptions used in the model.

In this work, we apply the CFD in modeling airflow and particulate transport. This modeling is then compared to field validation studies to both inform and validate the modeling assumptions. Based on the results of field tests, modeling assumptions and boundary conditions are refined and the process is repeated until the results are found to be reliable with a high level of confidence.

The only geometries and flow conditions considered are those that are common to hot cells and gloveboxes in the DOE complex. The work includes multiple analysis models each studying different specific geometry configurations such as flow over sharp corners, which are common in this environment. Similarly, this study will examine turbulence models in the flow regimes and condition typically found in these environments.

The work has been proposed in two phases. The first phase of the work is to develop a methodology for analysis of flow related to glove box accident scenarios. The second phase builds on and extends this to larger and more complex ventilated areas such as hot cell facilities. This latter phase focuses on particulate flow and stagnation points as sources for particulate accumulation and contamination. While both phases have common technical approaches, the first phase provides the groundwork and a natural

starting point for the second phase; these phases occur sequentially. In this report we present the results of the Phase 1 work.

2. Phase I – CFD Analysis of Gloveboxes

In Phase I of this work, we include a specifically selected set of standard geometries common to gloveboxes used in radiological work. This modeling was supported by field measurement studies which both informed and validated the modeling assumptions. Based on the results of field tests, we refined the modeling assumptions and boundary conditions and repeated the process until the results were found to be reliable with a high level of confidence.

The first step was identifying the set of standard facility configurations that represent the most common geometries and operating conditions employed in gloveboxes. The main geometries of interest included those which induce turbulent flow or separation of flow, such as a geometric representation of personnel standing in front of or passing by the opening in a glovebox. Operating conditions included both standard and accident operating conditions. The particular accident scenario investigated was a loss of glove incident, which has air flow requirements specified in the AGS standard.

The analysis then proceeded by individually modeling each set of the standard configurations. A CFD model was created by modeling the selected geometry and using the initial modeling assumptions. The modeling assumptions included choice of turbulence model, element type, and mesh structure. Systems were analyzed for both steady-state solutions, to compute velocity flow fields, and transient solutions for events that involve the release of a contaminant gas with simulated smoke traces that incorporate concentration and kinematic diffusivity rather than simple flow velocities.

After obtaining the results from the CFD models, the next step was to validate the computed results with real world field tests. Field tests made use of anemometer readings, and actual smoke traces, which can be photographed and compared to the CFD results.

If field test results disagreed with the original results of the CFD models, we identified and examined fluid flow uncertainties in the analysis model. Where necessary, we modified element configurations and boundary conditions. This process was repeated until results were found to be reliable with a high level of confidence. Recall that these modeling assumptions have a profound impact on the analysis result, and it was precisely the purpose of this research to determine and validate proper choices through an iterative analysis/validation process.

Upon achieving a validated result, the model and modeling assumptions were documented and added to a set of validated analysis models. This set of validated analyses forms the basis of a methodology that is to be made available to other analysts within the DOE complex for use when performing similar safety analysis of glove box installations.

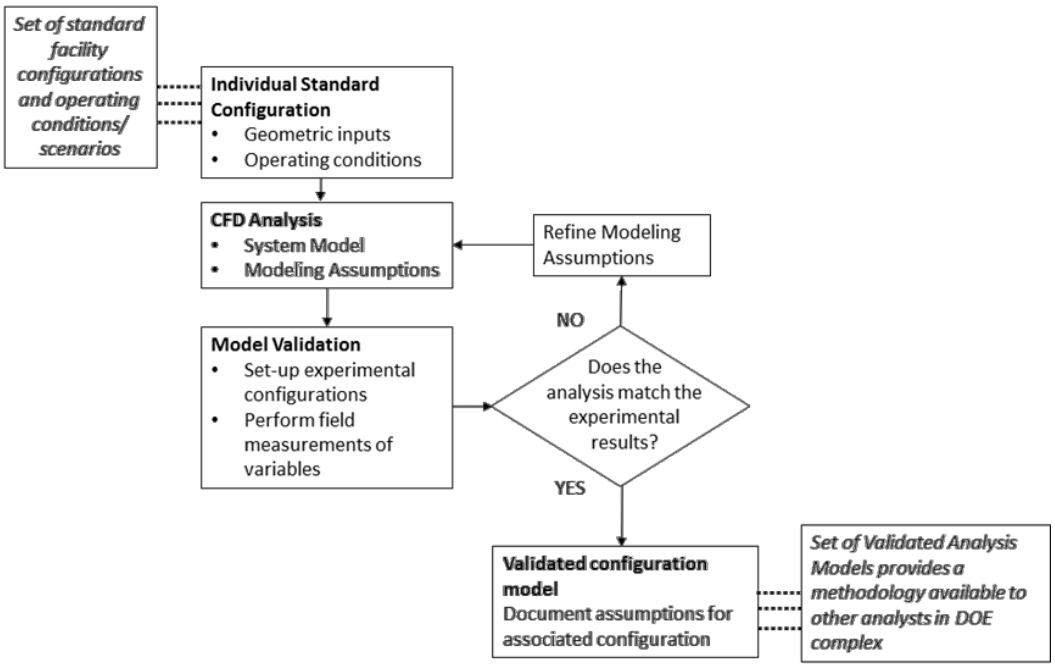

Figure 1. This flowchart provides a view of the overall approach used validate the CFD models.

The remainder of this report covers the identification of analysis cases, a summary of the analysis plan used, elaboration on the difficulties of CFD modelling for low-velocity flows, and the results for three case studies.

2.1. Identify the cases

Identify the cases that make up the set of standard facility configurations (number of modules, number of tiers, number of gloves per module, etc.) for glovebox installations and begin gathering geometric and operations details. Operating conditions include types of flow and room conditions.

2.1.1. Resources

We utilized the following AGS standards in identifying the most common standard glovebox configurations:

- AGS-G001-2007 Guideline for Gloveboxes
- AGS-G006-2005 Standard of Practice for the Design and Fabrication of Nuclear-Application Gloveboxes

Appendix A of AGS-G001-2007 "Guideline for Gloveboxes" describes typical glovebox configurations with dimensions. These configurations are identified in this report by an AGS xxx identifier that refers to the figure number used in that standard. AGS-G006-2005 "Standard of Practice for the Design and Fabrication of Nuclear-Application Gloveboxes" identifies requirements for nuclear-application gloveboxes involving low-level alpha or beta sources.

J. Davis investigated and took pictures of several gloveboxes in Buildings 200 and 205. Many of these were identified as described above. The pictures provide typical arrangements of the gloveboxes in a room. J. Davis also collected lessons learned from the past 5 years regarding glovebox accidents. Hazards and scenarios included: a buildup of VOCs within the glovebox, removing decontamination solution from a glovebox, glove o-ring degradation, inadequate airflow causing IPA vapor buildup, halogen light causing a crack in window glass, using the wrong tool for the job causing a glove breach/failure, positive intake of radioactive material from possibly air-borne material, and a window changing procedure that results in damaging gloves.

2.1.2. Glovebox configurations

After examining AGS standards and reviewing onsite glovebox installations, the following four glovebox configurations were identified as being typical for DOE laboratory use:

- Single module, single tier, single sided, two gloves
- Single module, single tier, double sided, two gloves
- Multi-module, single tier, single sided, two gloves per module
- Multi-module, multi-tier, single sided, two gloves per module and per tier

Figure 2 through Figure 5 illustrate the selected configurations.

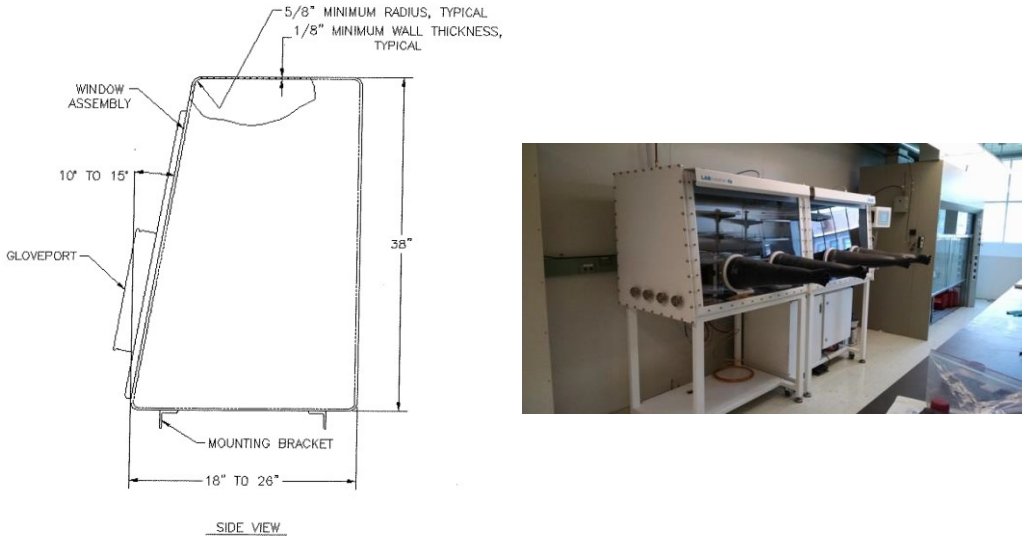

Figure 2. Single module, single tier (Figure AGS001 from Appendix A of AGS-G001-2007), M. Braun small glovebox with two gloves.

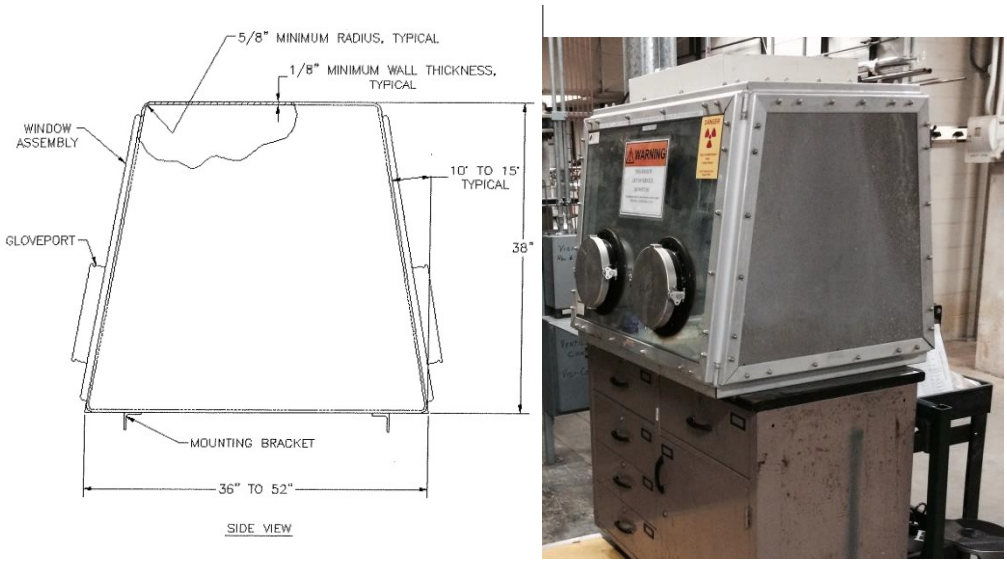

Figure 3. AGS002 from Appendix A of AGS-G001-2007 and small, double-sided glovebox in Bldg. 212 at Argonne National Laboratory.

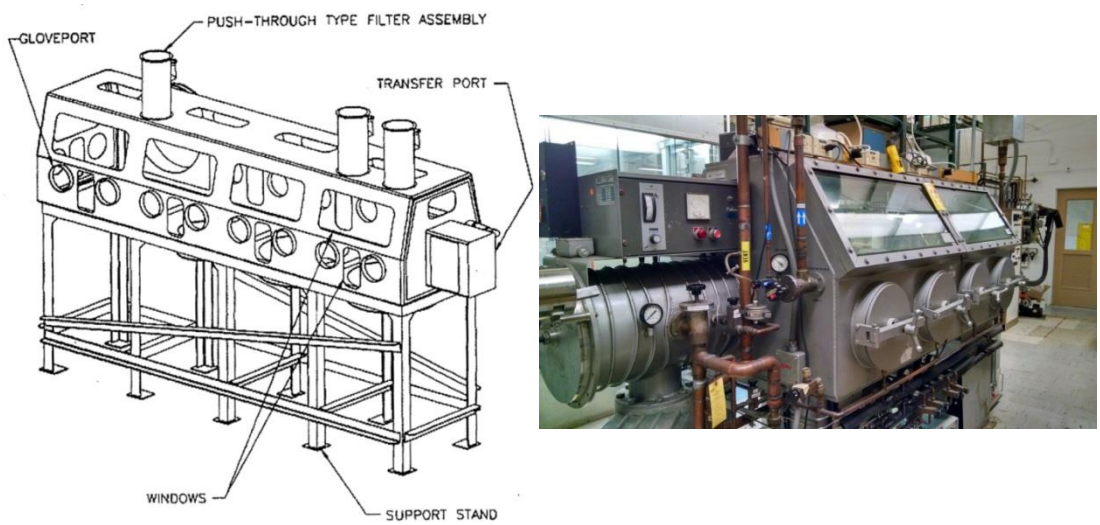

Figure 4. AGS019 from Appendix A of AGS-G001-2007.

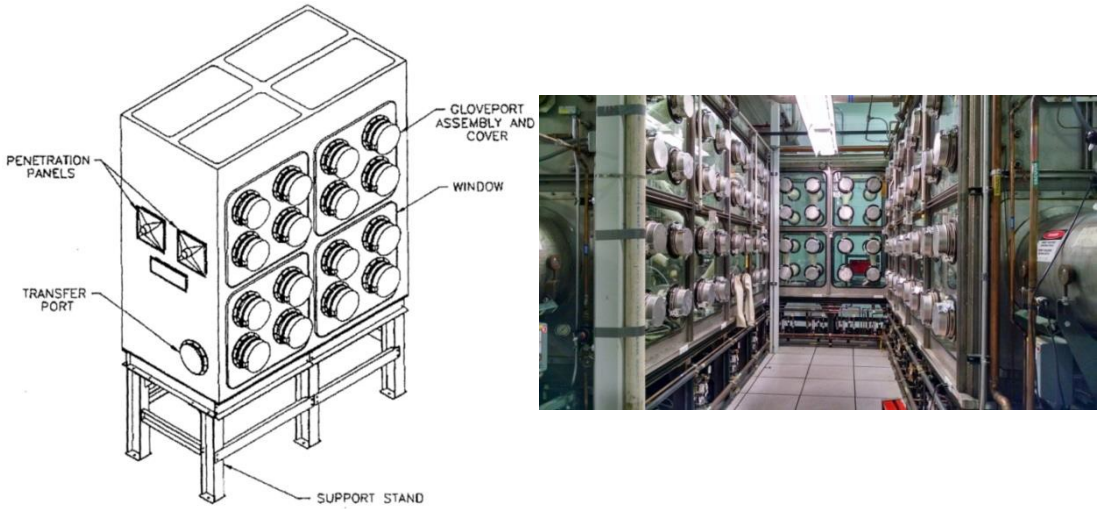

Figure 5. Figure AGS017 from Appendix A of AGS-G001-2007 and an actual multi-module, multi-tier glovebox installation in Bldg. 205 at Argonne National Laboratory. Note that the Bldg. 205 J117 gloveboxes were designed, fabricated, and tested per AGS-G006-2005.

2.1.3. Operating conditions

Operating conditions under consideration for analysis include the type of atmosphere flow and conditions affecting flow outside of the glovebox but within the room.

2.1.3.1. Flow information

There are two types of flows used for glovebox atmospheres, once-through and recirculating. Once-through flow gloveboxes generally involve the use nitrogen or air. HEPA filters are located before the glovebox to remove possible contaminants and after the glovebox to prevent unwanted release of material to the environment. Recirculating flow of glovebox atmospheres implies that the gas used, generally argon, is purified by passing it through a filter to remove contaminants, such as moisture or oxygen.

2.1.3.2. Room conditions

Although for normal operating conditions the scope of the geometry to be modeled has well defined limits, modeling accident scenarios such as a loss of glove can easily extend to a large portion of the entire room. In this report, it was found that modeling room ventilation supply and exhaust, as well as thermal conditions, played nontrivial roles in determining flow patterns just outside the glove port. Moving objects could also contribute to the behavior of the local air flow, but there was not sufficient time to investigate this condition.

2.1.3.3. Accident types

After reviewing many reports of lessons learned from various accident cases, some common themes in accidents became apparent. Many accidents involved minor breaches, such as cracks, leaks in seals, or minor glove damage. These small breaches that lead to loss of containment are not suitable to

investigation through CFD analysis. However, using CFD is applicable as a tool to identify possible buildup of unwanted chemicals or radiological material. Additionally, the AGS standards state requirements for a loss of glove accident scenario. This case is important for CFD work to provide a technical basis for face velocity requirements in this type of breach.

2.1.4. Summary of cases

Although ANL has many gloveboxes on site, only a few were available for field testing. We needed boxes that met the following requirements: radiologically and chemically clean, not currently being used for other work, needed to be able to conduct tests without a glove, and operates under negative pressure.

We eventually identified two suitable gloveboxes located in room J-117 in Bldg. 205 and room F-202 in Bldg. 212.

Table 1. Summary of Cases Used Presented in this Report

Case	Glovebox Configuration	Flow Type	Operating Conditions
1	Multi module, multi-tier, single sided	Once through	Loss of glove accident
2	Multi module, multi-tier, single sided	Once through	Normal conditions
3	Single module, single tier, double sided	Once through	Loss of glove accident

2.2. Analysis test plan

The overall test plan is simple: create a preliminary CFD model, photograph flow patterns in the field with a smoke source, and adjust the model to match the observed flow patterns. However, photographing smoke in order to obtain images suitable for comparing to CFD results requires proper equipment not only in terms of camera selection, but also for lighting, choice of smoke source, and means of injecting smoke into the air flow. Before creating a detailed test plan, our testing methodology needed to be developed.

- Lab space in X-wing
- Test setup: duct with small DC blower
- Grid: adjust focus, later used to estimate velocity
- Smoke sources tested: “haze in a can”, smoke tube with bulb, smoke tube with pump
- Camera used: video is too blurry when viewing a single frame; initial camera (DSLR) frame rate of only 3 fps produced crisp images but too much time between frames to estimate velocity; then procured mirrorless camera with high frame rate (20 fps)
- Camera settings and lighting

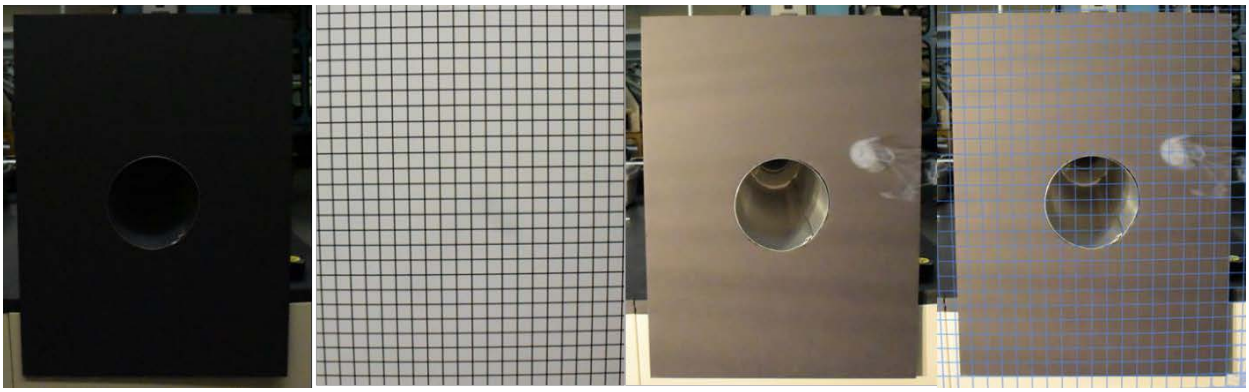

Figure 6. From left to right, we see the test setup with a 6" ventilation duct surrounded by black foam board. The black foam board enhances the visibility of the smoke. Next is a photograph of the grid used for establishing camera focus. Third is an example photograph of smoke with proper camera settings and lighting. And the final image demonstrates the method of overlaying the grid for velocity estimation.

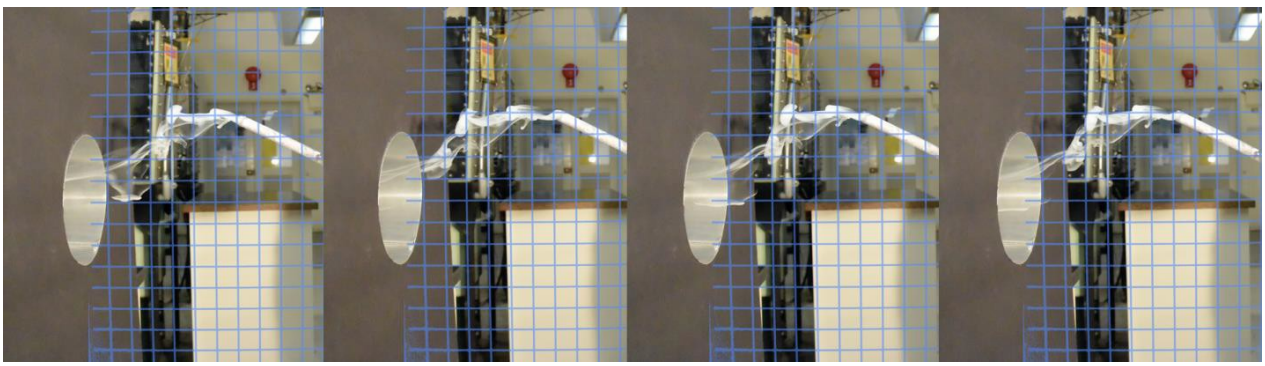

Figure 7. This sequence of photos, taken while viewing the duct from the side, shows the final result from development of flow visualization with smoke and photography.

- Field test steps
  - Anemometer readings at top, right, bottom, left, and center of glove port
  - Photograph grid to focus camera and for later use in estimating velocity
  - Photograph puffs of smoke from tube & bulb
  - Photograph continuous stream of smoke from tube & pump

2.3. CFD analysis

Multiple factors contribute to obtaining accurate results in CFD analysis. Choice of turbulence model, external geometry, boundary conditions, and even mesh type were found to significantly alter the results of the models presented in this report.

1. Turbulence Models (based on Reynolds Averaged Navier-Stokes equations):

There are two major types of turbulence models, eddy-viscosity and Reynolds-stress. It is interesting to note that the standard κ-ε model, an eddy-viscosity model, is considered to be an industry standard because of its stability and robust behavior. It is a general purpose model, but it is not suitable for boundary layer separation, sudden changes in mean strain rate, rotating fluids, or flows over curved surfaces. And, it is exactly these fluid flow behaviors that are of particular interest in glovebox ventilation

simulation. Multiple versions of each model type were examined to determine if a glovebox ventilation analysis exhibited any sensitivity to choice of turbulence model. No significant difference was found between variations within either of the two model types. However, there was a noticeable difference in flow pattern results between any eddy-viscosity model and any Reynolds-stress model. This is what one should expect, as the eddy-viscosity model does not allow for separation of flow. Other turbulence model types include Large Eddy simulation and Detached Eddy simulation, which are not applicable to modeling flow in gloveboxes.

2. Mesh type

The CFX software allows for either tetrahedral or hexahedral meshing. The geometry involved for modeling glovebox flow generally involves cubic shapes and is quite suitable for hexahedral meshing. However, both mesh types were examined to determine to what extent mesh type affects the accuracy of results.

3. Boundary conditions

For the accident scenario of loss of glove, external conditions become vital to obtaining accurate modeling of flow patterns. Using only the internal geometry of the glovebox can lead to significant errors, as shown in Figure 8, where we see potential for backflow.

After field testing, external geometry was added to the original model used in preliminary analysis until no further change was observed in the flow patterns in or near the glovebox.

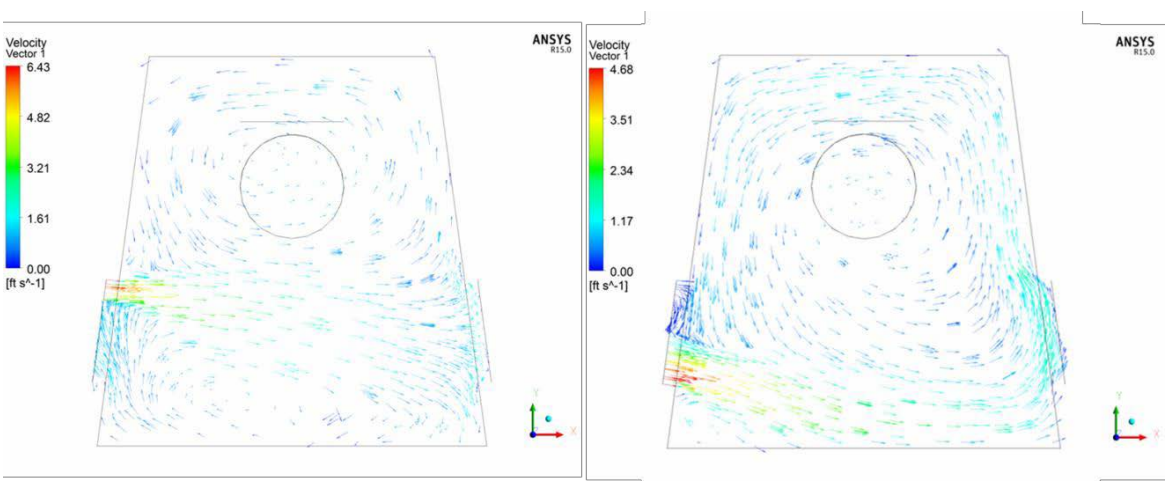

Figure 8. Examples of erroneous results from excluding external geometry.

In addition to the effects of external geometry, external thermal conditions were also found to have significant influence on the behavior of the air flow. And once the external geometry has been added, the ventilation configuration for the room must be included, as well.

2.4. Case 1 (205 J-117 loss of glove)

Case 1 examines a loss of glove accident scenario for a multi-tier, multi-module glovebox, as shown previously in Figure 5 and below in Figure 9. Case 1 is a good demonstration of the importance of applying thermal boundary conditions.

2.4.1. Case 1 preliminary CFD

2.4.1.1. Geometry & mesh

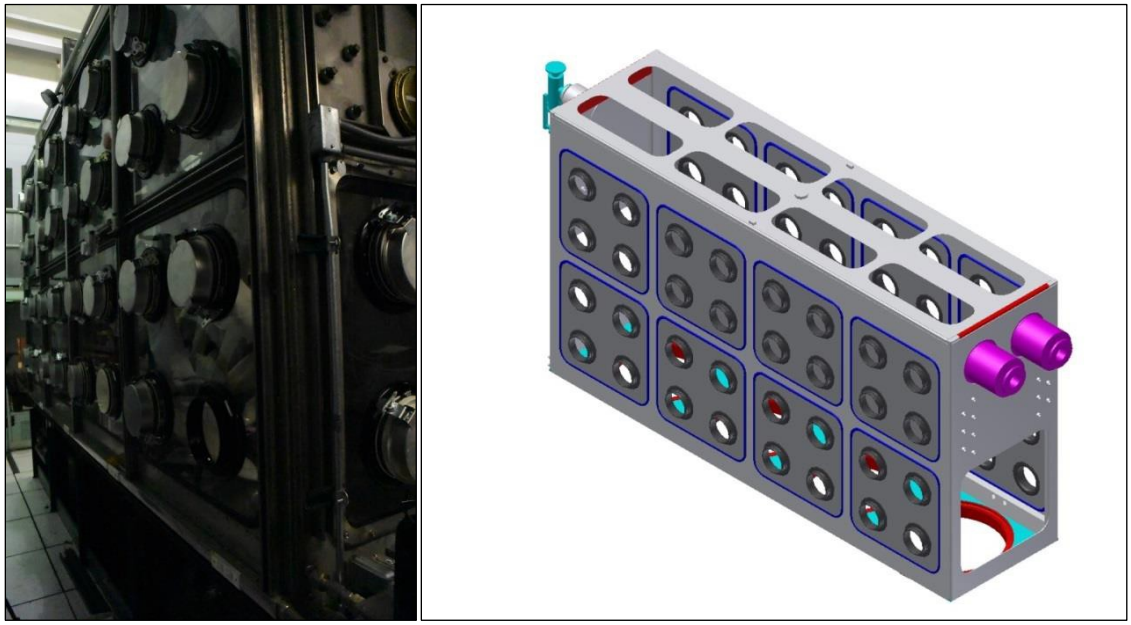

Figure 9. Photograph and CAD model of the multi-tier, multi-module glovebox.

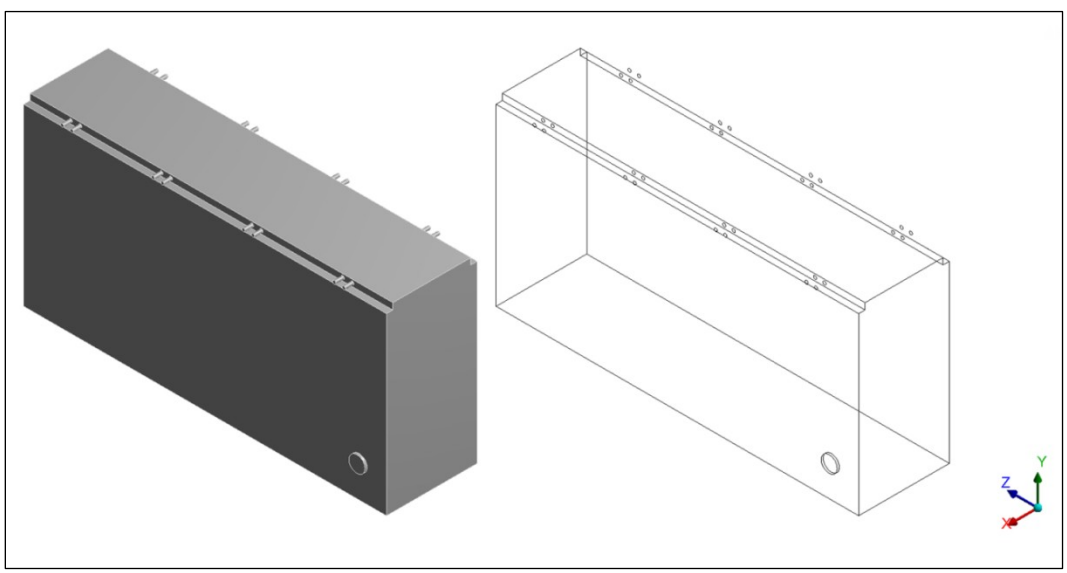

Figure 10. Geometry used in CFD model. Note that the initial model does not include any external geometry.

2.4.1.2. Modeling assumptions

All models presented in this report assumed dry air at 25 °C and 1 atm with properties as shown in Table 2. Material Properties, and the SST turbulence model was selected.

Table 2. Material Properties

Property	Value	Units
Molar mass	28.96	kg/kmol
Density	1.185	kg/m^3
Specific heat capacity	1004.4	J/kg-K
Dynamic viscosity	1.831×10^{-05}	Pa-s
Thermal conductivity	0.0261	W/m-K

The 16 exhaust vents were each set to have a velocity of 3.556 ft/s to give the glove port face velocity an average value of 125 ft/min, and the glove port was set as an opening with zero relative pressure.

2.4.1.3. Results of the preliminary model

Results of the preliminary model for Case 1 were examined using a combination of vector, streamline, and contour plots. The contour plot of glove port face velocity shows a higher velocity between the 12 o'clock and 3 o'clock locations. The average face velocity was calculated as 125 ft/min.

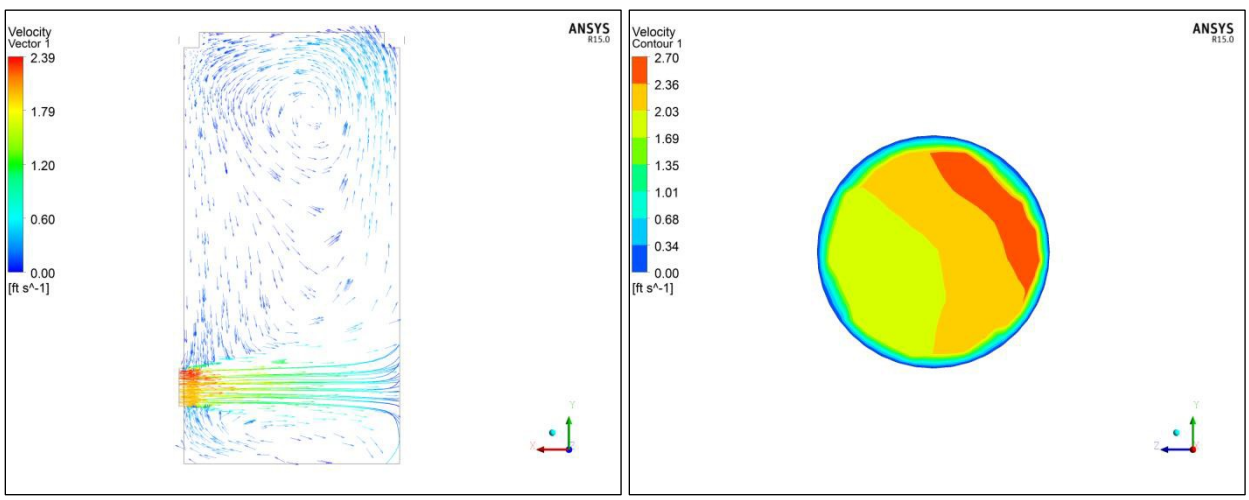

Figure 11. Results from the preliminary analysis. The image on the right is the face velocity at the open glove port.

2.4.2. Case 1 field test

The first stage of the Case 1 field test was conducted in the following manner. The glovebox was set to run in off-normal conditions, connected directly to the full exhaust of the building. Prior to removing the glove, the internal pressure is checked using the glovebox pressure gauge and recorded. Then the glove

was removed, and a second check of the pressure gauge was recorded. Before releasing any smoke for flow visualization, anemometer readings were taken at the 3 o'clock, 6 o'clock, 9 o'clock, 12 o'clock, and center locations of glove port.

Table 3. Case 1 – Field Test Measurements Taken Prior to Smoke Tests

Internal Pressure	Normal operation (in-H2O)	Loss of glove (in-H2O)
	-1.7	-0.1
Anemometer readings	Position at glove port opening	Velocity (ft/min)
	3 o'clock	130
	6 o'clock	132
	9 o'clock	135
	12 o'clock	150
	Center	142
	Average	138

After ensuring that the glovebox was operating as expected based on the recorded anemometer readings, photographing smoke traces began from the side view of glove port. First, a photo of a grid was taken to obtain focus and for later use in estimating velocity. Photos were taken using smoke tubes with a squeeze bulb, releasing puffs or streams of smoke at varied locations. This was repeated using smoke tubes connected to the small air pump. The entire process was repeated with the camera aimed facing the glove port directly. Additional photos were taken for unexpected flow patterns of interest. Due to the camera's high frame rate, the total number of still photos was over three thousand.

The observed flow patterns behaved exactly as expected when viewed from the side. However, a rather interesting flow pattern was observed when viewing the glove port head on. See Figure 12. This interesting flow pattern could have been from vortex stretching, natural convection flow due to thermal conditions, or induced by room ventilation supply ducts.

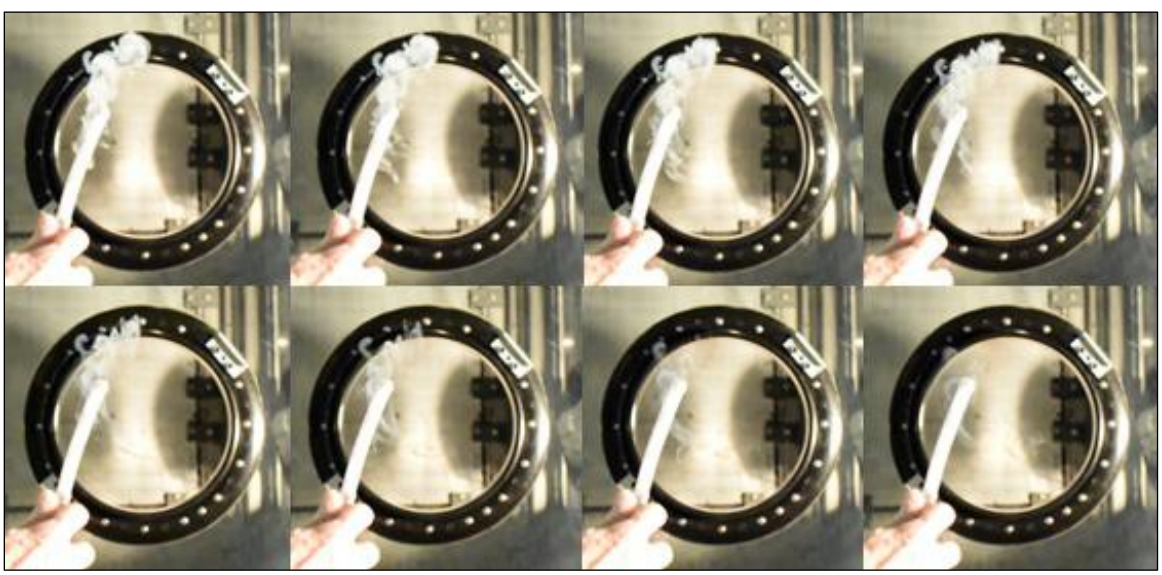

Figure 12. Photographs from field test in Case 1. The spiral flow of the smoke was an unexpected flow pattern.

2.4.3. Comparison with CFD

The exhaust boundary condition in the CFD model was adjusted until average face velocity was equal to field measurements. External geometry representing the walls and floor of the room were added until there was no noticeable change in the flow patterns around the glove port. The initial results of the revised CFD did not show the spiraling flow observed during the field test. In fact, the flow appeared uniform from all directions leading into the glove port.

There are two supply ducts within the room, and these were added as boundary conditions to the model. However, this added boundary condition did not lead to the flow pattern observed in field tests.

Addition of thermal condition, hot lights, leads to the characteristic pattern. Thermal conditions involving buoyancy and natural convection require a transient model in order to obtain good convergence.

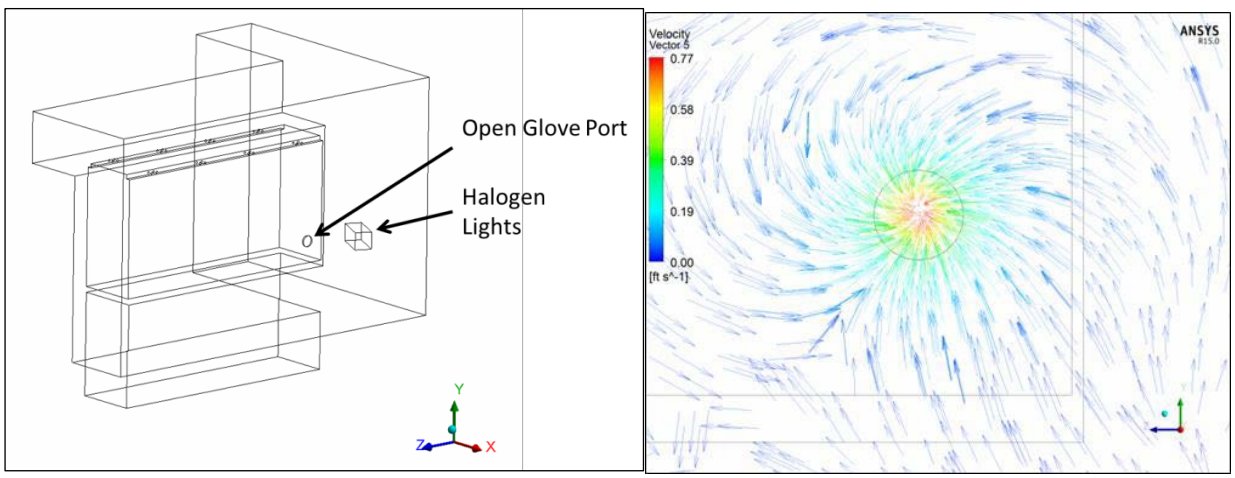

Figure 13. Updated geometry of the analysis model including geometry external to the glovebox. Also note that heat from the halogen lighting used for photography needed to be included in the model. Results after model refinement are shown on the right. The flow pattern here matches the observed flow patterns from field tests as shown in Figure 12.

2.5. Case 2 (205 J-117 normal operating conditions)

Case 2 examines the multi-module, multi-tier glovebox under normal operating conditions. Thus, the preliminary CFD analysis has no need to include external geometry. Smoke sources are placed within the glovebox prior to conducting field tests, and they are manipulated as needed by use of the gloves.

2.5.1. Preliminary CFD

2.5.1.1. Geometry & mesh

The geometry for Case 2 is rather simple when compared to Case 1. Again, the overall cubic shapes are well suited for hexahedral meshing. The glove port opening was removed, and supply vents were added.

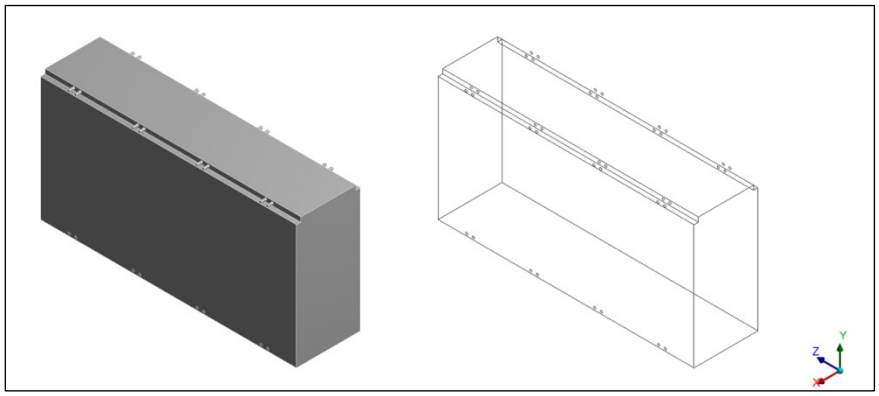

Figure 14. Case 2, modeling of normal operating conditions, involved rather simple geometry in the CFD model.

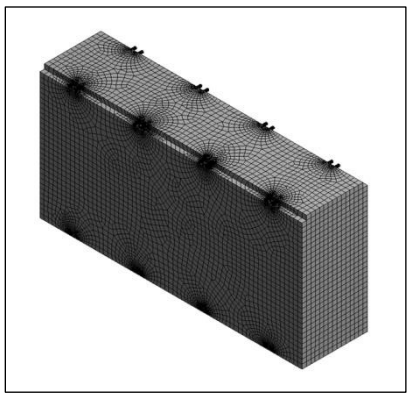

Figure 15. The hexahedral mesh used for the CFD model of Case 2.

2.5.1.2. Modeling assumptions

Material properties were input as listed in Table 2. Material Properties, and the SST turbulence model was selected.

Exhaust vents were set to have a negative pressure of 0.01 psi, and the inlet vents were set as openings with zero relative pressure.

No thermal conditions were applied to the model.

2.5.1.3. Results

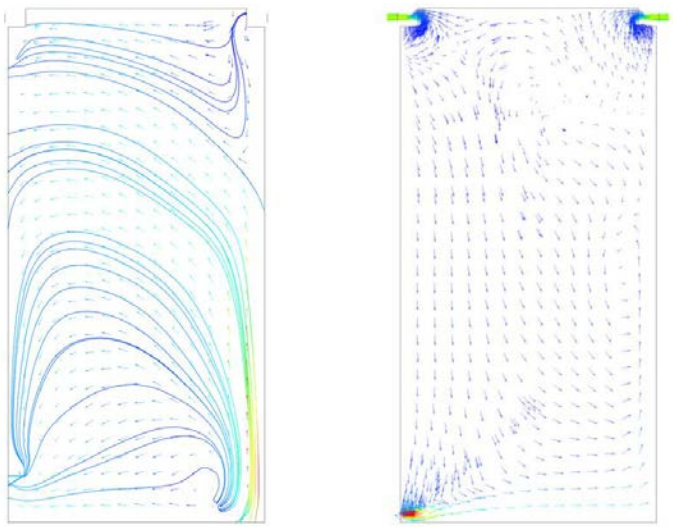

Figure 16. Flow patterns during normal operating conditions in the multi-module, multi-tier glovebox.

2.5.2. Field measurements

The glovebox pressure gauge indicated an internal pressure of -1.7 inches of water. No other quantitative measurements were taken during this field test. Flow velocities within the glovebox under normal operations were too low for accurate measurement with the hot-wire anemometer. Only photographs of smoke released by ventilation smoke tubes, by bulb or pump, were obtained.

2.5.3. Comparison with CFD

Nearly two thousand photos were obtained during the Case 2 field test. Photos obtained in the field tests were difficult to work with, partly due to the low velocities and partly due to the difficulty in photographing the smoke through the glass of the glovebox. In the two photos shown in Figure 17, the cloud of smoke is highlighted by an orange circle. It is hard to judge the movement by simply examining the still images side by side. Switching quickly between photos on a computer screen did provide sufficient means to compare the motion of the smoke to the CFD model. None of the smoke traces seemed to deviate from the preliminary analysis.

Better observations and photos might have been acquired with the use of a better light source or other means of illuminating the smoke traces.

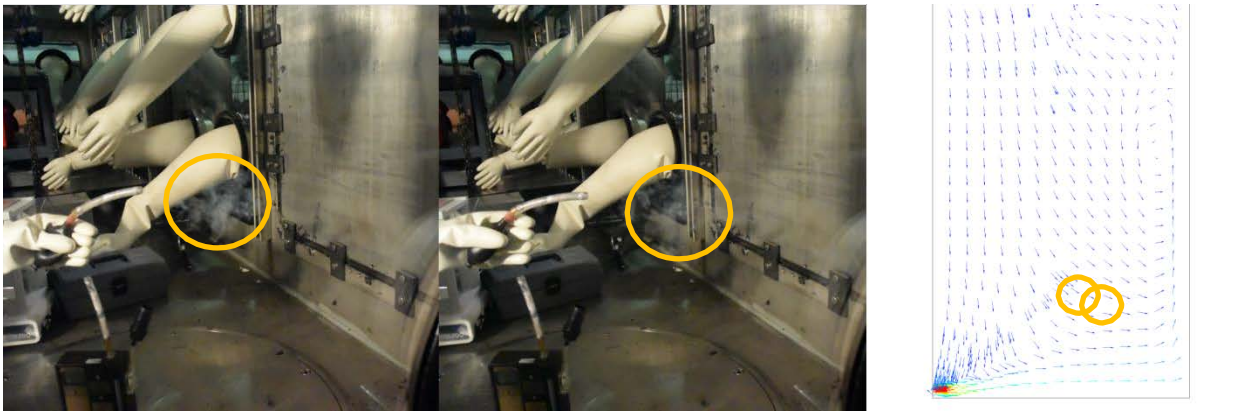

Figure 17. The photos obtained in the Case 2 field tests were difficult to work with, partly due to the low velocities and partly due to the difficulty in photographing the smoke through the glass of the glovebox. In the two photos shown in this figure, the cloud of smoke is highlighted by an orange circle. It is hard to judge the movement by simply examining the still images side by side. Switching quickly between photos on a computer screen did provide sufficient means to compare the motion of the smoke to the CFD model.

2.6. Case 3 (small, double-sided glovebox loss of glove)

2.6.1. Preliminary CFD

2.6.1.1. Geometry & mesh

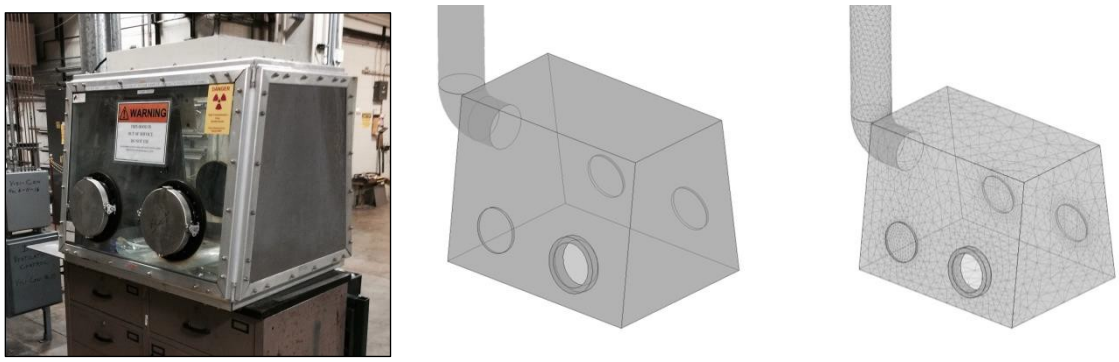

Figure 18. A photo of the small, double-sided glovebox used in field testing, the geometry used in the preliminary CFD model, and the corresponding mesh. Due to difficulties with meshing with hexahedral elements, a tetrahedral mesh was used.

2.6.1.2. Modeling assumptions

Material properties were input as listed in Table 2. Material Properties, and the SST turbulence model was selected.

The exhaust duct was set to have a velocity of 1.683 ft/s to give the glove port face velocity a value of 125 ft/min, and the glove port was set as an opening with zero relative pressure.

No thermal conditions were applied to the model.

2.6.1.3. Results

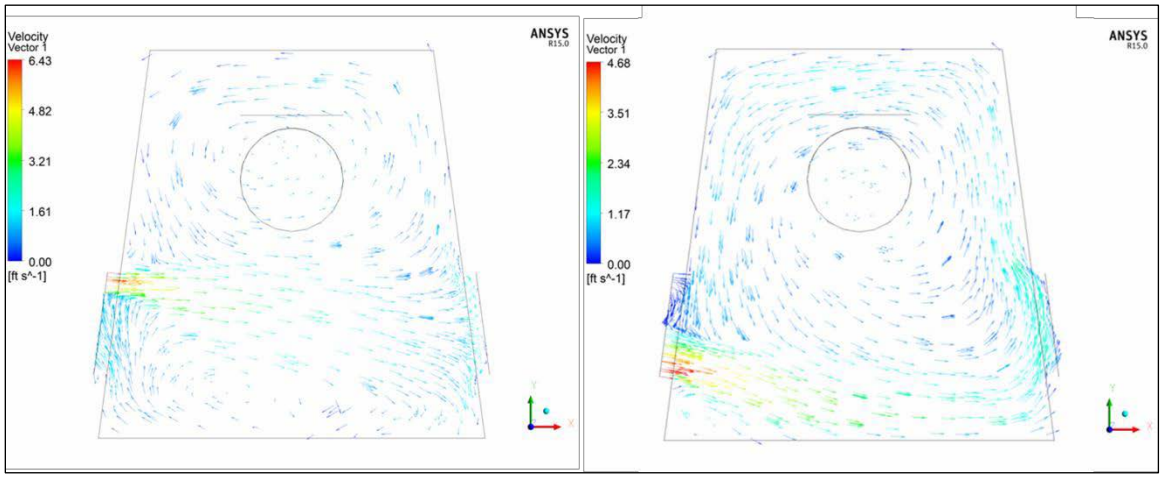

Figure 19. Some initial results from the preliminary CFD analysis of the small, double-sided glovebox. This model does not include the external geometry of the room's walls and floor, and although different boundary conditions were used for the open glove port, a noticeable amount of blowback was indicated.

2.6.2. Field measurements

The first stage of the Case 3 field test was conducted in a manner similar to Case 1 with two main differences. Two glove ports were examined, and additional safety precautions were added due to this glovebox being designated as a high contamination area.

The glovebox was set to run in off-normal conditions, connected directly to the full exhaust of the building. Then, the glove was removed. Before releasing any smoke for flow visualization, anemometer readings were taken at the 3 o'clock, 6 o'clock, 9 o'clock, 12 o'clock, and center locations of glove port.

Anemometer readings and smoke traces at both glove ports indicated that no blowback occurs for this glovebox in a loss of glove accident. However, the average face velocity was very near 100 ft/min, giving an opportunity to observe the lower limit specified by the AGS standard.

Table 4. Case 3 – Field Test Measurements Taken Prior to Smoke Tests

	Position at glove port opening	Left Port Velocity (ft/min)	Right Port Velocity (ft/min)
Anemometer readings	3 o'clock	95	110
	6 o'clock	89	90
	9 o'clock	100	96
	12 o'clock	106	105
	Center	115	105
	Average	101	101

2.6.3. Comparison with CFD

External geometry was added to the model, including floor, ceiling, two walls, and a generous amount of open space, as shown in Figure 20. The exhaust boundary condition was adjusted until average face velocity of 101 ft/min was obtained in order to match field measurements.

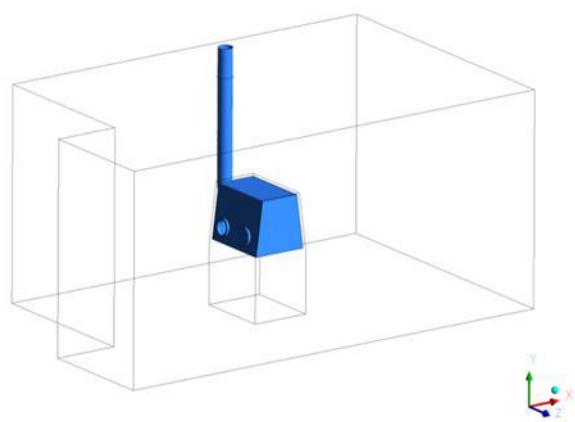

Figure 20. External geometry was added based on the surroundings of the small glovebox. There is a significant amount of open space, but there are also two walls and some ventilation system components nearby.

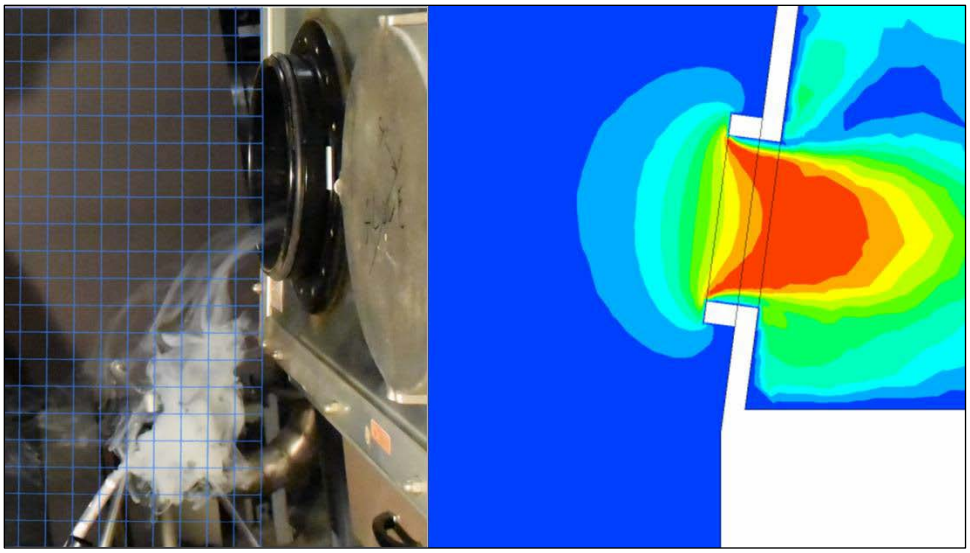

Figure 21. Although the results of the refined model compared well to observed smoke traces near the open glove port, there were difficulties encountered in attempting to match the behavior of lower velocity flow patterns (indicated by dark blue region of the contour plot). According to the CFD results, velocities in this region were below 14 ft/min.

Some interesting flow patterns were unintentionally photographed in the vicinity of the left glove port of the small glovebox (Figure 22). There was an obvious upward movement of air along the side of the port opening. Attempts to match this flow pattern in simulation were made, but for now, the conditions leading to this pattern are still unidentified.

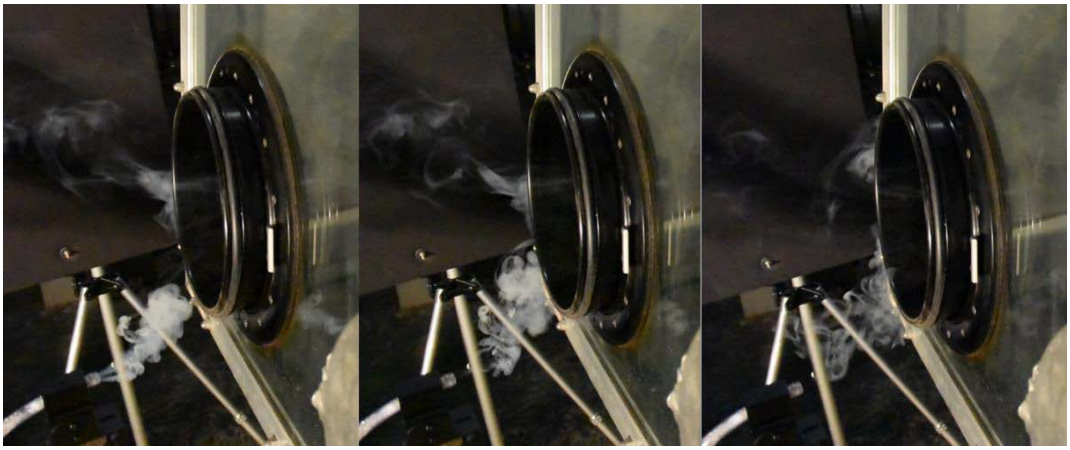

Figure 22. This sequence of photos shows a flow pattern that has yet to be reproduced in the CFD model. The flow gently rises vertically along the far side of the port.

One attempt to simulate the unusual pattern in Figure 22 involved the addition of geometry to represent the technician present during the smoke tests. This geometry is depicted in Figure 23. An example of the effects on the flow patterns is shown in Figure 24.

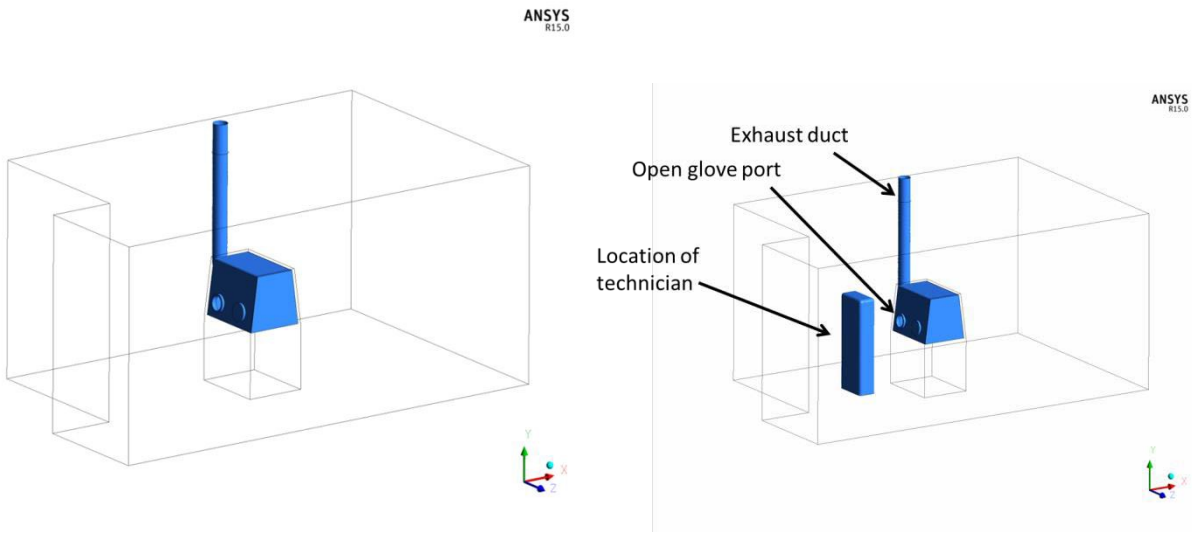

Figure 23. Modification of CFD model geometry to simulate the presence of the technician that was releasing the smoke traces.

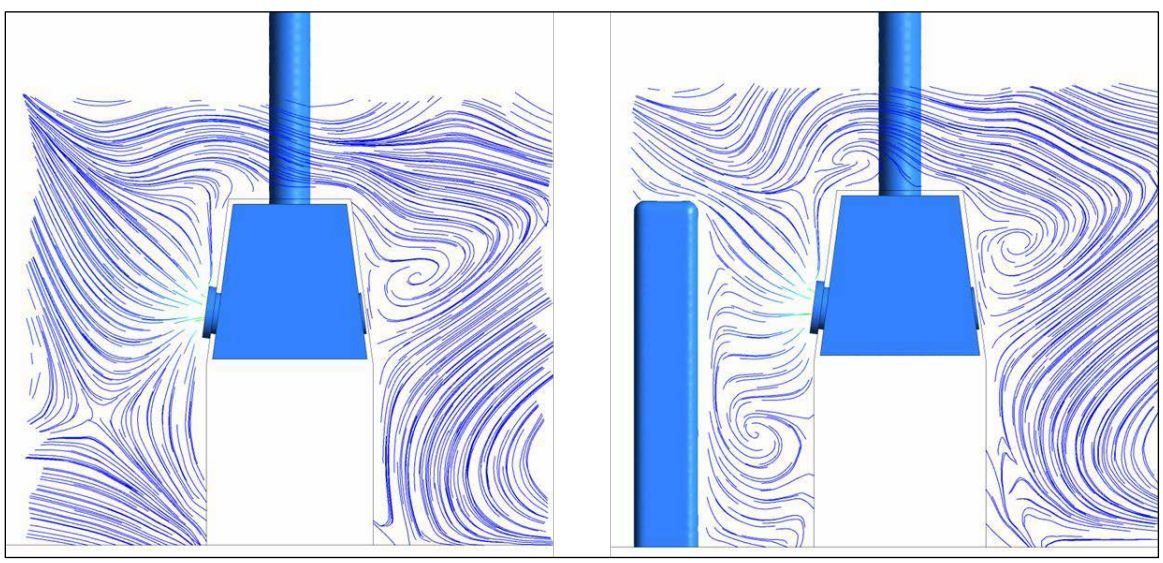

Figure 24. Comparison of streamline patterns with and without a technician standing near the open glove port.

2.7. Summary of findings

Phase 1 brought to light some of the limitations of our current field testing methods, provided lessons applicable to Phase 2, and left areas for further investigation. We encountered limitations particularly with regard to lighting. The 1500 Watt halogen lights were adequate in many cases but capturing photographs of smoke within the glovebox proved troublesome due to reflections off the glovebox glass. The method of overlaying the grid on smoke trace photos was helpful; however, there was lack of precise quantitative

measurement as the smoke would tend to move in and out of the grid plane at times. Despite the difficulties, Phase 1 certainly did provide useful experience to be applied in Phase 2 for modeling particulate flow in hot cells. An IR thermometer was ordered and will be used to examine thermal conditions in the hot cell, and there will be more utilization of bench top tests with control of flow conditions as an intermediary between modeling and direct testing in the field. In addition, the hot cell facility has the benefit of being more accessible, which will allow for better surveying of test areas prior to creating preliminary CFD models and field tests. There were multiple points that warrant completing further iterations of both modeling and field testing. There will also be one more glovebox field test, which will make use of a 500 mW laser and provide overall better visualization of flow. Although the new imagery will still be of a qualitative rather than quantitative nature, the two dimensional laser sheet will provide images that are clearer and more readily comparable to the CFD results.

1. References

1. William L. Oberkampf and Timothy G. Trucano, Verification and Validation in Computational Fluid Dynamics, March 2002.
2. Marcel Loomans, The Measurement and Simulation of Indoor Air Flow, University of Eindhoven, 1998.
3. AGS Guideline for Gloveboxes, 3rd Ed. AGS-G001-2007.
4. AGS Standard of Practice for Leak Test Methodologies for Gloveboxes and Other Enclosures, 1st Ed. AGS-G004-2014.
5. AGS Standard of Practice for the Design and Fabrication of Nuclear-Application Gloveboxes, AGS-G006-2005.

NOTES

- Solicitation of feedback at the November 2014 American Glovebox Society Standards Development Committee meeting.

Nuclear Engineering Division
Argonne National Laboratory
9700 South Cass Avenue, Bldg. 362
Argonne, IL 60439

www.anl.gov

Argonne National Laboratory is a U.S. Department of Energy
laboratory managed by UChicago Argonne, LLC