Managing Aging Effects on Dry Cask Storage Systems for Extended Long-Term Storage and Transportation of Used Fuel

Rev. 2

Fuel Cycle Research & Development

Prepared for
U.S. Department of Energy
Used Fuel Disposition Campaign

O.K. Chopra, D.R. Diercks,
R.R. Fabian, Z.H. Han and Y.Y. Liu

Argonne National Laboratory

September 30, 2014
FCRD-UFD-2014-000476
ANL-13/15

Submitted by:

2014.09.26 14:56:54 -05'00'

Yung Y. Liu (Argonne National Laboratory)
Work Package Manager

Page intentionally blank

EXECUTIVE SUMMARY

At present, the United States does not have a designated disposal site for used nuclear fuel — the nation therefore faces the prospect of extended long-term storage (i.e., >60 years) and deferred transportation of used fuel at operating and decommissioned nuclear power plant sites. Under current U.S. federal regulations contained in Title 10 of the Code of Federal Regulations (CFR) 72.42, the initial license term for an Independent Spent Fuel Storage Installation (ISFSI) must not exceed 40 years from the date of issuance (20 years before the rule change in 2010 that became effective in 2011). The U.S. Nuclear Regulatory Commission (NRC) may renew licenses at the expiration of the license term upon application by the licensee for a period not to exceed 40 years. Applications for ISFSI license renewals must include the following:

1. Time-limited aging analyses (TLAAs) that demonstrate that structures, systems, and components (SSCs) important to safety will continue to perform their intended function for the requested period of extended operation and

2. A description of the aging management program (AMP) for the management of issues associated with aging that could adversely affect SSCs important to safety.

In addition, the application must include design basis information as documented in the most recently updated final safety analysis report, as required by 10 CFR 72.70. Information contained in previous applications, statements, or reports filed with the Commission under the license may be incorporated by reference, provided that these references are clear and specific.

The NRC has issued the "Standard Review Plan for Renewal of Spent Fuel Dry Cask Storage System Licenses and Certificates of Compliance," NUREG-1927, under which NRC may renew a specific license or a Certificate of Compliance (CoC) for a term not to exceed 40 years. Both the license and the CoC renewal applications must contain revised technical requirements and operating conditions (fuel storage, surveillance and maintenance, and other requirements) for the ISFSI and dry cask storage system (DCSS) that address aging effects that could affect the safe storage of the used fuel. The information contained in the license and CoC renewal applications will require NRC review to verify that the aging effects on the SSCs in DCSSs/ISFSIs are adequately managed for the requested period of extended operation. To date, all of the ISFSIs across the United States with more than 1,500 dry casks loaded with used fuel have initial license terms of 20 years — three ISFSIs (Surry, H.B. Robinson, and Oconee) have received their renewed licenses for 40 years, and two other ISFSIs (Calvert Cliffs and Prairie Island) have applied for license renewal for 40 years. In addition, renewal of the CoC for the VSC-24 system is pending approval from NRC.

This report examines issues related to managing aging effects on the SSCs in DCSSs/ISFSIs for extended long-term storage and subsequent transportation of used fuels, following an approach similar to that of the "Generic Aging Lessons Learned (GALL)" report, NUREG-1801, for the aging management and license renewal of nuclear power plants. The report contains five chapters, as well as two appendices (A and B, respectively), on quality assurance for AMPs for used-fuel DCSSs and a comparison of TLAAs and AMPs developed in this report with those in GALL.

- Chapter I of the report provides an overview of the ISFSI license renewal process based on 10 CFR 72 and the guidance provided in NUREG-1927.

- Chapter II contains definitions and terms for structures and components in DCSSs, materials, environments, aging effects, and aging mechanisms.
- Chapter III and Chapter IV contain the generic TLAAs and AMPs, respectively, that have been developed for managing aging effects on the SSCs important to safety in the DCSS designs described in Chapter V.
- Chapter V contains summary descriptions of the DCSSs in use in the United States and tabulations of evaluations of TLAAs and AMPs for the SSCs that are important to safety in the DCSS designs (i.e., NUHOMS; HI-STORM/HI-STAR 100; Transnuclear, Inc., TN metal cask; NAC International, Inc., dry storage cask technology; Ventilated Storage Cask [VSC-24]; Westinghouse MC-10 metal dry storage cask; CASTOR V/21 and X/33 dry storage casks; and W150 FuelSolutions storage system) that have been and continue to be used by utilities across the country for the dry storage of used fuel.

The goal of this report is to help establish the technical basis for extended long-term storage and subsequent transportation of used fuel, which may occur multiple times before final disposal at a mined repository or geological disposal facility. Future efforts should include the development of additional TLAAs and AMPs that may be deemed necessary, as well as further evaluation of the adequacy of the generic TLAAs and AMPs that may need augmentation. Industry and site-specific operating experience from the various DCSSs/ISFSIs located across the country should be periodically examined to (a) ascertain the potential aging effects on the SSCs in the DCSSs, thereby enabling a compilation of existing aging management activities, and (b) assess the adequacy of these activities for extended long-term storage and subsequent transportation of used fuel.

Note that technically speaking, managing aging effects on DCSSs for extended long-term storage and subsequent transportation of used fuel "begins" shortly after the used-fuel assemblies are loaded into a canister (or cask) under water in the spent-fuel pool. The canister (or cask) containing the used-fuel assemblies is then drained, vacuum dried, and back-filled with helium through a drain port after the lid is closed, either by welding or by bolted closure. The welded canister (after being placed inside a transfer cask) and the bolted cask are moved to an outdoor concrete pad of an ISFSI, where it would stay for 20 or 40 years of the initial license term (and up to another 40 years for a license renewal term), according to 10 CFR 72.42. Approximately 2,000 dry casks have begun long-term storage under the initial license terms; some of them have been in storage for over 20 years and are already in the license renewal term for up to 40 years.

Transferring from pool to pad or from wet to dry storage is an abrupt change of environment for the used-fuel assemblies, and the effects are most pronounced during vacuum drying, especially for high-burnup fuel, because of the potential of cladding radial hydride formation and embrittlement. The possibility of hydride reprecipitation diminishes only after the cladding temperature has dropped below 200°C (392°F) because of the decrease of fission-product decay heat during prolonged cooling, which may occur 20–25 years after the high-burnup used-fuel assemblies are placed in dry storage. Information on operating experience with long-term storage of high-burnup used fuel assemblies is needed to better understand this phenomenon. Until such information becomes available, this report recommends preventing and/or minimizing cladding embrittlement by radial hydrides during drying, transfer, and early stages of storage. This will maintain the configuration of the used fuel in the dry canister (or cask) and ensure retrievability of the used fuel and its transportability after extended long-term storage.

Consideration of aging effects on DCSSs for extended long-term storage of used fuel is no different from that required during the certificate and/or license renewal term of the DCSSs/ISFSIs. The principles and guidance developed by the NRC in NUREG-1927 are applicable to extended long-term storage, as the requested period of extended operation, or license term, reaches 40, 60, or 80 years. The term in the initial or renewal license is important because it indicates a finite period of operation. This does not rule out license renewal for multiple terms, as long as aging effects are adequately managed.

Managing aging effects on DCSSs for extended long-term storage and subsequent transportation of used fuel requires knowledge and understanding of the various aging degradation mechanisms for the materials of the SSCs and their environmental exposure conditions for the requested period of extended operation. The operating experience involving the AMPs, including the past corrective actions resulting in program enhancements or additional programs, should provide objective evidence to support a determination that the effects of aging will be adequately managed so that the intended functions of the SSCs will be maintained during the requested period of extended operation. Because of the passive nature of the DCSSs and their shorter storage periods of less than 30 years at the ISFSIs, the operating experience of DCSSs and ISFSIs is not as extensive compared to nuclear power plants. However, evaluations have been performed on the NRC's requests for additional information (RAIs) on applications for renewal of licenses for ISFSIs and DCSSs, as well as the applicant's responses to the RAIs that were accepted by NRC, to assess their relevance to the TLAAs and AMPs described in Chapter III and Chapter IV of this report, respectively. Those found relevant have been incorporated into the generic TLAAs and AMPs.

Managing aging effects on DCSSs for extended long-term storage and subsequent transportation of used fuel depends on AMPs to prevent, mitigate, and detect aging effects on the SSCs early, by means of condition and/or performance monitoring. Detection of aging effects should occur before there is a loss of any structure's or component's intended function. Among the important aspects of detection are method or technique (i.e., visual, volumetric, or surface inspection), frequency, sample size, data collection, and timing of new/one-time inspections to ensure timely detection of aging effects. The challenges in the detection of aging effects will invariably involve accessibility issues for inspection and monitoring and the frequency of inspection and monitoring (i.e., periodic versus continuous). Ongoing industry programs — such as the Electric Power Research Institute's (EPRI's) integrated plan for addressing potential chloride-induced SCC of austenitic stainless steel DCSS canisters and the High-burnup Dry Storage Cask Research and Development Project, as well as separate effects studies conducted by the DOE national laboratories and abroad — should generate data and information in the future for use in aging management of DCSSs/ISFSIs for extended long-term storage and subsequent transportation of used fuel.

About Revision 2

The Revision 2 report has been substantially updated to incorporate revisions made on the basis of stakeholder comments received on the Rev. 1 report since March 2014. Altogether, three hundred and twenty (320) comments were received from members of EPRI's Extended Storage Collaboration Program (ESCP); these members represent the Nuclear Energy Institute (NEI), EPRI, utilities, cask vendors, NRC, Department of Energy (DOE) national laboratories, and Germany. The comments may be grouped into five categories: (1) interpretations of 10 CFR 72

and NRC regulatory requirements; (2) definitions of environments, aging mechanisms, and aging effects; (3) specific content in the proposed generic TLAAs and AMPs with respect to aging management activities and analyses; (4) difficulties in performing inspections, condition monitoring, and other aging management activities in terms of accessibility and hostile environments; and (5) descriptions of DCSSs.

At the request of industry and NRC, meetings were held at Argonne in May 2014 to discuss the comments and their proposed resolutions. These meetings were highly productive in that technical issues in aging management and regulatory requirements for license renewal were discussed in depth, and these discussions helped clarify terminology and enhance consistency throughout Rev. 2. The updated report also includes changes made in response to the additional comments received in June from NRC, EPRI, AREVA TN, NAC, and Holtec. Of the 320 comments, 236 resulted in revisions. The resolutions of all comments are documented, and the majority of them were discussed with NEI/industry and NRC. Highlighted below are some of the more significant improvements in the Rev. 2 report:

- For consistency with 10 CFR 72.42 terminology, Rev. 2 uses “initial license term,” where the term could be 20 or 40 years; “license renewal term,” where the term is up to 40 years; and “extended long-term storage,” where the term is beyond the license renewal term. The phrase “requested period of extended operation” is also used throughout Rev. 2 for the license renewal term that could be less than 40 years and for extended long-term storage. Also, for consistency with 10 CFR 72 terminology, Rev. 2 uses the phrase "important to safety” throughout the report and clarifies further in Appendix A (“Quality Assurance for AMPs for used fuel dry cask stroage systems”) that for non-important-to-safety SSCs that are subject to aging management activities, the 10 CFR 72, Subpart G, QA program would apply in a graded approach. For general licensees, the 10 CFR 72 QA program may be implemented under the 10 CFR 50, Appendix B, QA program, which has been previously approved by the Commission.

- The TLAA in Section III.2 addresses fatigue of metal and concrete structures and components in the DCSSs/ISFSIs with a typical design life of 50 years. The various metal and concrete structures and components of DCSSs/ISFSIs are designed in accordance with either ASME Section III Subsection NB-3222.4, NC-3219.2, and NF-3331.1 or ACI-349 and ACI 318.1 Code to account for cyclic loads due to daily or seasonal changes in ambient temperature at the site. Steel structures outside the cask/canister are designed against fatigue according to ANSI/AISC N690-06 and Appendix 3 of ANSI/AISC N360-10. According to these design standards/codes, for metallic components, the temperature change during a day or a year should not exceed $(S_a)/2E\alpha$, where S_a is the allowable stress at fatigue limit, E is the elastic modulus, and α is the coefficient of thermal expansion. Similar analysis is performed for concrete structures, as well as for the closure bolts of the bolted casks. For the requested period of extended operation, the aging analyses should validate (1) that the cumulative fatigue damage is within the Code design limit, or (2) that potential fatigue damage will be managed by an AMP, or (3) demonstrate that all applied cyclic loads are insignificant and a fatigue analysis is not required.

- The TLAA in Section III.6 for the environmental qualification of electrical equipment in DCSSs has been removed, and the justification is provided in Appendix B, which compares the generic TLAAs and AMPs developed in Rev. 2 for DCSSs/ISFSIs with those in GALL for nuclear power plants. The GALL report includes TLAA Section X.E1 ("Environmental Qualification of Electric Components") to demonstrate that certain electrical components located in harsh plant environments (that is, those areas of the plant that could be subject to a loss of coolant accident [LOCA], high energy line breaks, or post-LOCA environment) are qualified to perform their safety function in those harsh environments, even after the effects of in-service aging are taken into account. There are no analogous environments or electrical control systems in DCSSs, and the aging-related degradation of electrical monitoring equipment in these systems can be adequately managed by plant maintenance procedures.

- Key elements in AMPs in Sections IV.S2, IV.M1, IV.M2, IV.M3, and IV.M5 have all been modified to address, respectively, Level II and Level III requirements for protective coatings on carbon steel components; acceptance criteria for external surface monitoring of mechanical components; temperature monitoring of the system inlet and outlet air and/or system inspections and walkdowns; criteria by which the canister/cask top lid and vent cover welds and the canister cylindrical shell longitudinal and circumferential welds were designed, fabricated, erected, and tested; and supplementation of radiation and temperature monitoring activity with an industry effort to develop a database on inspection results of canister and cask internals for high burnup fuel. Such opportunistic inspections should be conducted on canisters/casks that become available as a result of confinement boundary integrity issues and require repackaging.

- Regarding the use of the NRC Interim Staff Guidance (ISG) documents in the AMPs in Sections IV.M3, IV.M4, and IV.M5, these documents are considered as non-mandatory guidance in Element 2 ("Preventive Actions") of these AMPs. Whereas these ISGs provide interim guidance and, therefore, may change over time as new information becomes available, they also represent current understanding and the existing knowledge base. Because the boundary between existing knowledge and unknown factors or knowledge to emerge in the future always exists, *guidance*, in a way, is similar to *best practice,* which may be defined as a method empirically proven to yield excellent results and accomplish the stated objective. As expected, both regulatory guidance and industry best practices will evolve as knowledge and experience increase over time.

- To emphasize the operations-based (or focused) approach in aging management by industry and NRC, as well as the "toll gate" concept described in NEI 14-03 regarding periodic assessment, Element 5 ("Monitoring and Trending") of selected AMPs in Chapter IV has been modified to include the following statement: "New capabilities for detection of aging effects and monitoring and trending should be evaluated and implemented to ensure timely detection and accurate prediction of aging effects. The operations-based aging management concept of analysis and assessments (toll gates), described in NEI 14-03, should provide periodic assessments of new aggregated information as they become available. The sources of information include industry efforts related to research and development, monitoring and inspection, High Burnup Dry Storage Cask Research and Development Project, and chloride-induced SCC."

- Most of the comments from AREVA TN, Holtec, and NAC on the DCSS designs in Chapter V have been incorporated to ensure the accuracy of the descriptions of these systems. Not included are new designs that represent significant departure from the existing systems in exposure environment — for example, below-ground storage that requires a separate system evaluation is beyond the scope of the Rev. 2 report. However, new systems can be incorporated relatively easily in the future, because Chapter V sections in the Rev. 2 report are independent; any modifications in these sections can be made without affecting the pagination of other sections in the report. The same is true for the TLAAs and AMPs in Chapters III and IV, respectively, should any of them need to be augmented, or new ones added, for site-specific applications.

Acknowledgments

We would like to thank Ned Larson of DOE-NE and Ken Sorenson of Sandia National Laboratories for their support of this work.

We would like to acknowledge the following colleagues for their contributions to the Rev. 2 report and offer our sincere thanks for their efforts in reviewing the Rev. 1 report, as well as engaging discussions during the meetings: John J. Sisk and John R. LaSalle, Energy Northwest, Columbia Generating Station; Lawrence Pulley, Diablo Canyon; Shannon Chu, Albert Machiels, and Keith Waldrop, EPRI; Hundal (Andy) Jung and Miguel Manrique, AREVA TN; Sandra Geupel, Gesellschaft für Anlagen- und Reaktorsicherheit (GRS) mbH; David Enos, Sandia National Laboratories; Kaushik Banerjee, Oak Ridge National Laboratory; Aladar Csontos, Darrell Dunn, Zhian Li, and Ricardo Torres, NRC; Tom Danner, NAC; Stefan Anton, Holtec International; Rodney McCollum and Kristopher Cummings, NEI; Raymond Termini, Exelon; Timothy Morrison, Xcel Energy; Paul Plante, Maine Yankee Atomic; and Brian Gutherman, Gutherman Technical Services.

We would also like to extend special thanks to Shannon Chu of EPRI and Bob Einziger of NRC for discussions on various topics related to aging management during the period of preparation of this report. Thanks are also extended to Rev. 0 and Rev. 1 authors David Ma, Vik Shah, and Shiu-Wing Tam of Argonne National Laboratory, as well as to Sandy Birk of Idaho National Laboratory for her review and comments of the Rev. 0 report. Finally, we would like to thank members of the Argonne communication team, led by Kevin A. Brown and including Joe Harmon and Vicki Skonicki, for their efforts in producing the Rev. 2 report.

CONTENTS

Executive Summary iii

Acronyms xvii

I. Introduction I.1-1

I.1 Overview of License Renewal Process I.1-4

I.2 Scoping Evaluation I.2-1

I.3 Aging Management Review I.3-1

I.3.1 Relevant Regulations for Aging Management Review I.3-1

I.3.2 Time-Limited Aging Analysis I.3-4

I.3.3 Aging Management Program I.3-5

I.4 Overview of Managing Aging Effects I.4-1

I.5 References I.5-1

II. Definitions and Terms for Structures, Components, Materials, Environments, Aging Effects, and Aging Mechanisms II.1-1

II.1 Structures and Components II.1-1

II.2 Materials II.2-1

II.3 Environments II.3-1

II.4 Aging Effects II.4-1

II.5 Significant Aging Mechanisms II.5-1

II.6 References II.6-1

III. Time-Limited Aging Analyses III.1-1

III.1 Identification of Time-Limited Aging Analyses III.1-2

III.1.1 Description of the Time-Limited Aging Analyses III.1-2

III.1.1.1 Acceptance Criteria III.1-3

III.1.2 Dispositioning the Time-Limited Aging Analyses III.1-4

III.1.3 Final Safety Analysis Report Supplement III.1-5

III.1.4 References III.1-7

III.2 Fatigue of Metal and Concrete Structures and Components III.2-1

III.2.1 Description of the Time-Limited Aging Analysis III.2-1

III.2.2 Dispositioning the Time-Limited Aging Analysis III.2-2

III.2.2.1 ASME Section III Design III.2-2

III.2.2.2 Design of Concrete Structures—ACI-215 ..... III.2-3

III.2.2.3 ANSI/AISC 690 and ANSI/AISC 360 Design III.2-4

III.2.3 Final Safety Analysis Report Supplement III.2-4

III.2.4 References III.2-4

III.3 Corrosion Analysis of Metal Components III.3-1

III.3.1 Description of the Time-Limited Aging Analysis III.3-1

III.3.2 Dispositioning the Time-Limited Aging Analysis III.3-1

III.3.2.1 Corrosion Allowances III.3-1

III.3.2.2 Corrosion Effects Management III.3-1

III.3.3 Final Safety Analysis Report Supplement III.3-2

III.3.4 References III.3-2

III.4 Time-Dependent Degradation of Neutron-Absorbing Materials III.4-1
III.4.1 Description of the Time-Limited Aging Analysis III.4-1
III.4.1.1 Degradation of Neutron-Absorbing Materials III.4-2
III.4.2 Dispositioning the Time-Limited Aging Analysis III.4-4
III.4.2.1 10 CFR 72.124(b) Requirements III.4-4
III.4.2.2 NRC ISG-23 ..... III.4-4
III.4.2.3 NRC ISG-15 ..... III.4-5
III.4.3 Final Safety Analysis Report Supplement III.4-5
III.4.4 References III.4-5
III.5 Time-Dependent Degradation of Radiation-Shielding Materials III.5-1
III.5.1 Description of the Time-Limited Aging Analysis III.5-1
III.5.2 Degradation of Radiation-Shielding Materials III.5-1
III.5.3 Dispositioning the Time-Limited Aging Analysis III.5-2
III.5.3.1 10 CFR 72.42(a)(1), 72.126(a), and 72.128(a) Requirements III.5-2
III.5.3.2 NRC ISG-15 ..... III.5-2
III.5.3.3 Oconee Site-Specific ISFSI License Renewal III.5-3
III.5.4 Final Safety Analysis Report Supplement III.5-5
III.5.5 References III.5-5
III.6 Environmental Qualification of Electrical Equipment III.6-1
III.7 Other Site-Specific Time-Limited Aging Analyses III.7-1
III.7.1 Description of the Time-Limited Aging Analyses III.7-1
III.7.2 Dispositioning the Time-Limited Aging Analyses III.7-1
III.7.2.1 NUREG-1927 Section 3.5.1(5)(i) III.7-2
III.7.2.2 NUREG-1927 Section 3.5.1(5)(ii) III.7-2
III.7.3 Final Safety Analysis Report Supplement III.7-2
III.7.4 References III.7-3
IV. Description of Aging Management Programs IV.S1-1
IV.S1 Concrete Structures Monitoring Program IV.S1-1
IV.S1.1 Program Description IV.S1-1
IV.S1.1.1 Program Interfaces IV.S1-3
IV.S1.2 Evaluation and Technical Basis IV.S1-3
IV.S1.3 References IV.S1-7
IV.S2 Monitoring of Protective Coatings on Carbon Steel Structures IV.S2-1
IV.S2.1 Program Description IV.S2-1
IV.S2.1.1 Program Interface IV.S2-2
IV.S2.2 Evaluation and Technical Basis IV.S2-2
IV.S2.3 References IV.S2-3
IV.M1 External Surfaces Monitoring of Mechanical Components IV.M1-1
IV.M1.1 Program Description IV.M1-1
IV.M1.1.1 Program Interfaces IV.M1-1
IV.M1.2 Evaluation and Technical Basis IV.M1-2
IV.M1.3 References IV.M1-6
IV.M2 Ventilation System Surveillance Program IV.M2-1
IV.M2.1 Program Description IV.M2-1
IV.M2.1.1 Program Interfaces IV.M2-1

IV.M2.2 Evaluation and Technical Basis IV.M2-2
IV.M2.3 References IV.M2-3
IV.M3 Welded Canister Seal and Leakage Monitoring Program IV.M3-1
IV.M3.1 Program Description IV.M3-1
IV.M3.1.1 Program Interfaces IV.M3-3
IV.M3.2 Evaluation and Technical Basis IV.M3-4
IV.M3.3 References IV.M3-9
IV.M4 Bolted Cask Seal and Leakage Monitoring Program IV.M4-1
IV.M4.1 Program Description IV.M4-1
IV.M4.1.1 Program Interfaces IV.M4-2
IV.M4.2 Evaluation and Technical Basis IV.M4-3
IV.M4.3 References IV.M4-7
IV.M5 Canister/Cask Internals Structural and Functional Integrity Monitoring Program IV.M5-1
IV.M5.1 Program Description and Interfaces IV.M5-1
IV.M5.2 Evaluation and Technical Basis IV.M5-3
IV.M5.3 References IV.M5-8
V. Application of Time-Limited Aging Analysis and Aging Management Programs V.1-1
V.1 NUHOMS Dry Spent-Fuel Storage System V.1-1
V.1.1 System Description V.1-1
V.1.1.1 HSM Description V.1-3
V.1.1.2 DSC Basket Assembly and Shell V.1-6
V.1.1.3 Shell Top and Bottom Inner and Outer Cover Plates and Shield Plugs V.1-8
V.1.1.4 Vent and Siphon Ports V.1-9
V.1.2 Design Codes and Service Life V.1-9
V.1.3 Existing Inspection and Monitoring Program V.1-10
V.1.4 References V.1-11
V.2 HI-STORM 100 and HI-STAR 100 Systems V.2-1
V.2.1 Overall System Description V.2-1
V.2.1.1 Multipurpose Canisters V.2-3
V.2.1.2 HI-STORM 100 Overpacks V.2-9
V.2.1.3 HI-STAR 100 Overpack V.2-12
V.2.1.4 Shielding Materials V.2-15
V.2.2 Design Codes and Service Life V.2-17
V.2.3 Existing Inspection and Monitoring Program V.2-18
V.2.4 References V.2-19
V.3 Transnuclear Metal Spent-Fuel Storage Cask V.3-1
V.3.1 System Description V.3-1
V.3.1.1 Containment Boundary, Closure Lid, and Pressure Monitoring System V.3-3
V.3.1.2 Fuel Basket Assemblies and Shieldings V.3-5
V.3.1.3 Concrete Pad and Operating Experience V.3-6
V.3.2 Codes and Service Life V.3-7
V.3.3 Existing Inspection and Monitoring Program V.3-8
V.3.4 References V.3-8

V.4 NAC International Inc. (NAC) Dry Storage Cask Technology V.4-1
V.4.1 System Description V.4-1
V.4.1.1 NAC-S/T, C28 S/T, I28 S/T, and STC V.4-1
V.4.1.2 NAC-MPC V.4-3
V.4.1.3 NAC-UMS V.4-5
V.4.1.4 NAC-MAGNASTOR® V.4-7
V.4.2 Design Codes and Service Life V.4-9
V.4.3 Existing Inspection and Monitoring Program V.4-10
V.4.4 References V.4-10
V.5 Ventilated Storage Cask System VSC-24 ..... V.5-1
V.5.1 System Description V.5-1
V.5.1.1 Multi-Assembly Sealed Basket (MSB) V.5-2
V.5.1.2 Ventilated Concrete Cask (VCC) V.5-3
V.5.2 Codes and Service Life V.5-4
V.5.3 Existing Insepection and Monitoring Program V.5-4
V.5.4 References V.5-5
V.6 Westinghouse MC-10 Metal Dry Storage Cask V.6-1
V.6.1 System Description V.6-1
V.6.2 Codes and Service Life V.6-6
V.6.3 Existing Insepection and Monitoring Program V.6-6
V.6.4 References V.6-6
V.7 CASTOR V/21 and X/33 Dry Storage Casks V.7-1
V.7.1 System Description V.7-1
V.7.2 Codes and Service Life V.7-5
V.7.3 Existing Inspection and Monitoring Program V.7-5
V.7.4 References V.7-6
V.8 W150 FuelSolutions Storage System V.8-1
V.8.1 System Description V.8-1
V.8.1.1 Multi-Assembly Sealed Basket V.8-2
V.8.1.2 W150 Overpack V.8-3
V.8.2 Codes and Service Life V.8-4
V.8.3 Existing Inspection and Monitoring Program V.8-5
V.8.4 References V.8-5
Appendix A Quality Assurance for Aging Management Programs for Used-Fuel Dry Cask Storage Systems A-1
Appendix B Comparison of Time Limited Aging Analyses and Aging Management Programs in the Present Report With Those iIn NUREG-1801, Chapters X and XI B-1

Figures

I.1 Flowchart of the license renewal process I.1-4
I.2 Flowchart of scoping evaluation I.2-1
I.3 Flowchart of the aging management review (AMR) process I.3-2
V.1-1 NUHOMS horizontal dry storage systems at San Onofre. V.1-2
V.1-2 A schematic of the NUHOMS dry storage system V.1-3
V.1-3 Details of HSM heat shield V.1-4
V.1-4 Air flow diagram for a typical HSM design V.1-5
V.1-5 Drawing showing the side elevation and end view of the DSC support structure. V.1-5
V.1-6 Components of the various NUHOMS DSC assembly designs. V.1-8
V.1-7 Pressure and confinement boundaries for NUHOMS-32P1-T DSC. V.1-10
V.2-1 Cross-sectional views of an MPC inserted into HI-STORM 100 and 100S storage overpacks. V.2-2
V.2-2 HI-STORM 100 system using a HI-STORM 100S Version B overpack. V.2-3
V.2-3 Cross-sectional views of different MPC designs. V.2-4
V.2-4 Cross-section elevation view of MPC. V.2-6
V.2-5 MPC vent port details V.2-7
V.2-6 MPC closure details showing the MPC shell, MPC lid, and closure ring. V.2-8
V.2-7 MPC confinement boundary. V.2-8
V.2-8 Weld associated with the MPC confinement boundary. V.2-9
V.2-9 MPC internal helium circulation. V.2-10
V.2-10 Ventilation cooling of a HI-STORM storage system. V.2-10
V.2-11 Anchoring details for the HI-STORM 100A and 100SA overpacks. V.2-11
V.2-12 HI-STAR 100 overpack with MPC partially inserted V.2-13
V.2-13 HI-STAR 100 overpack elevation view V.2-14
V.2-14 HI-STAR 100 overpack cross-sectional view V.2-15
V.2-15 Gamma shield cross plates for HI-STORM 100 and 100S overpacks. V.2-16
V.3-1 Components of the Transnuclear TN-32 dry shielded canister assembly V.3-1
V.3-2 Transnuclear storage cask TN-68 confinement boundary components. V.3-2
V.3-3 TN-32 cask body key dimensions. V.3-2
V.3-4 TN-32 cask seal pressure monitoring system. V.3-3
V.3-5(a) Helicoflex seal V.3-5
V.3-5(b) A sketch illustrating the sealing concept of the Helicoflex seal V.3-5

V.3-6 Radial cross-section of TN-32 cask showing basket, basket rails, and gamma and neutron shields. V.3-6
V.3-7 TN-32 cask shielding configuration V.3-6
V.3-8 Typical vertical storage of Transnuclear metal cask V.3-7
V.4-1 NAC metal storage cask technology V.4-3
V.4-2 NAC-UMS dual-purpose storage system, CoC No. 72-1015 ..... V.4-6
V.4-3 MAGNASTOR dual-purpose storage/transport system, CoC No. 72-1031 ..... V.4-8
V.5-1 VSC-24 system components. V.5-1
V.6-1 Diagram of MC-10 spent-fuel dry storage cask. V.6-1
V.6-2 MC-10 fuel basket overview. V.6-2
V.6-3 MC-10 fuel cell detail. V.6-2
V.6-4 MC-10 cask closure details. V.6-3
V.6-5 MC-10 shield lid. V.6-4
V.6-6 MC-10 cask primary lid and bolting details. V.6-4
V.7-1 Diagram of CASTOR V/21 spent-fuel dry storage cask V.7-1
V.7-2 Diagram of CASTOR X/33 spent-fuel dry storage cask V.7-2
V.8-1 FuelSolutions Storage System W21 canister V.8-1
V.8-2 FuelSolutions Storage System W74 canister V.8-1
V.8-3 FuelSolutions Storage System W150 overpack V.8-2

Tables

I.1 Definitions of Ten Elements in an AMP for Managing Aging Effects in SSCs of DCSSs/ISFSIs. I.3-6
II.1 Selected Definitions and Use of Terms for Describing and Standardizing Structures and Components. II.1-1
II.2 Selected Definitions and Use of Terms for Describing and Standardizing Materials. II.2-1
II.3 Selected Definitions and Use of Terms for Describing and Standardizing Environments. II.3-1
II.4 Selected Use of Terms for Describing and Standardizing Aging Effects II.4-1
II.5 Selected Definitions and Use of Terms for Describing and Standardizing Aging Mechanisms. II.5-1
III.1 Sample Process for Identifying Potential TLAAs and Basis for Disposition. III.1-6
III.2 Examples of Generic TLAAs III.1-6
III.3 Example of Potential Site-Specific TLAA III.1-6
V.1.A NUHOMS Dry Spent-Fuel Storage: Horizontal Storage Module (HSM) V.1-13

V.1.B NUHOMS Dry Spent-Fuel Storage: Dry Shielded Canister (DSC) V.1-19

V.1.C NUHOMS Dry Spent-Fuel Storage: Basement (Pad) and Approach Slab (Ramp) V.1-20

V.2-1 Basic Parameters of the Holtec International Multipurpose Canisters or HI-STORM 100 and HISTAR 100 ..... V.2-5

V.2-2 Basic Parameters of the HI-STORM 100 and HI-STAR 100 Storage Casks V.2-12

V.2.A1 HI-STORM 100 System: Storage Overpack V.2-21

V.2.A2 HI-STAR 100 System: Storage and Transportation Overpack V.2-24

V.2.B HI-STORM 100 or HI-STAR 100 System: Multipurpose Canister (MPC) V.2-26

V.2.C HI-STORM 100 or HI-STAR 100 System: Basement (Pad) and Approach Slab (Ramp) V.2-27

V.3.A Transnuclear Metal Spent-Fuel Storage Cask : Storage Cask V.3-10

V.3.B Transnuclear Metal Spent-Fuel Storage Cask: Internal Contents of the Confinement Vessel V.3-13

V.3.C Transnuclear Metal Spent-Fuel Storage Cask : Basement (Pad) and Approach Slab (Ramp) V.3-15

V.4-1 Parameters for Selected NAC Dry Storage Cask Technology V.4-2

V.4-2 Selected Parameters for NAC-MPC, NAC-UMS, and MAGNASTOR Dry Storage Systems V.4-4

V.4.A1 NAC Storage Cask Technology: Storage Overpack (NAC-MPC, NAC-UMS, and MAGNASTOR) V.4-13

V.4.A2 NAC Storage Cask Technology: Storage Cask NAC-I28 S/T V.4-18

V.4.B1 NA Storage Cask Technology: Multipurpose Canister (MPC) for NAC-MPC, NAC-UMS, and MAGNASTOR V.4-21

V.4.B2 NAC Storage Cask Technology: Internal Contents of the Confinement Vessel of NAC-I28 Storage Cask V.4-22

V.4.C NAC Storage Cask Technology: Basemat (Pad) and Approach Slab (Ramp) V.4-23

V.5.A VSC-24 Storage Cask: Ventilted Concrete Cask (VCC) V.5-7

V.5.B VSC-24 Storage Cask: Multi-Assembly Sealed Basket (MSB) V.5-12

V.5.C VSC-24 Storage Cask: Basemat (Pad) and Approach Slab (Ramp) V.5-13

V.6.A Westinghouse MC-10 Metal Dry Storage Cask: Storage Cask V.6-8

V.6.B Westinghouse MC-10 Metal Dry Storage Cask: Internal Contents of the Confinement Vessel V.6-10

V.6.C Westinghouse MC-10 Metal Dry Storage Cask: Basemat (Pad) and Approach Slab (Ramp) V.6-11

V.7-1 Selected design parameters for the CASTOR V/21 and X/33 dry storage casks V.7-4

V.7.A CASTOR Dry Storage Cask: Storage Cask V.7-8

V.7.B CASTOR Dry Storage Cask: Internal Contents of the Confinement Vessel V.7-10

V.7.C CASTOR Dry Storage Cask: Basemat (Pad) and Approach Slab (Ramp)..... V.7-11

V.8.A W150 FuelSolutions Storage System: Concrete Overpack V.8-7

V.8.B W150 FuelSolutions Storage System: W21/W74 Canisters V.8-12

V.8.C W150 FuelSolutions Storage System: Basemat (Pad) and Approach Slab (Ramp) V.8-13

B.1 Comparison of Time-Limited Aging Analyses in FCRD-UFD-2013-000294 with those in NUREG-1801 ..... B-1

B.2 Comparison of Aging Management Programs in FCRD-UFD-2013-000294 with those in NUREG-1801 ..... B-2

ACRONYMS

ACI	American Concrete Institute
AISC	American Institute of Steel Construction
AMA	aging management activity
AMP	aging management program
AMR	aging management review
ANSI	American National Standards Institute
ASME	American Society of Mechanical Engineers
ASR	alkali-silica reaction
ASTM	American Society for Testing and Materials
BWR	boiling water reactor
CB	confinement boundary
CC	criticality control
CFR	Code of Federal Regulations
CoC	Certificate of Compliance
CUF	cumulative usage factor
DBE	design basis earthquake
DBTT	ductile-to-brittle transition temperature
DCSS	dry cask storage system
DOE	U.S. Department of Energy
DOR	Division of Operating Reactors
DSC	dry shielded (or storage) canister or dry storage cask
EPRI	Electric Power Research Institute
FR	fuel retrievability
FSAR	Final Safety Analysis Report
GALL	Generic Aging Lessons Learned
GL	Generic Letter
GTCC	greater than class C
GWd/MTU	gigawatt-day/metric ton uranium
HAZ	heat affected zone
HBF	high-burnup fuel
HSM	horizontal storage module
HT	heat transfer
ISFSI	Independent Spent Fuel Storage Installation
ISG	interim staff guidance
ITS	important to safety
ksi	kilopound per square inch

LRA	license renewal application
MPa	megapascal
MPC	Multi-Purpose Canister
MRS	monitored retrievable storage
MSB	Multi-Assembly Sealed Basket
NAC	NAC International, Inc.
NRC	U.S. Nuclear Regulatory Commission
NRR	Office of Nuclear Reactor Regulation
NUHOMS	NUTECH horizontal modular storage
NUREG	U.S. Nuclear Regulatory Commission Regulation
PMS	pressure-monitoring system
ppm	part(s) per million
psi	pound per square inch
PT	liquid penetrant testing
PWR	pressurized water reactor
QA	quality assurance
RAI	request for additional information
RCSC	Research Council for Structural Connections
RG	Regulatory Guide
RS	radiation shielding
RSI	request for supplemental information
SAR	Safety Analysis Report
SCC	stress corrosion cracking
SER	Safety Evaluation Report
SFST	Spent Fuel Storage and Transportation
SNF	spent nuclear fuel (used interchangeably with used nuclear fuel or used fuel)
SRP	Standard Review Plan
SS	structural support
SSC	structure, system, and component
S/T	storage/transfer
TLAA	time-limited aging analysis
TN	Transnuclear, Inc. (now AREVA TN)
TSC	transportable storage canister
UMS	Universal Multi-Purpose Canister System
UT	ultrasonic testing
VCC	vertical concrete cask
VSC	ventilated storage cask

I. INTRODUCTION

The reactor core of a nuclear power plant in the United States consists of 100 to 1000 fuel assemblies. These fuel assemblies are typically replaced after four to six years. The irradiated nuclear-fuel assemblies, commonly referred to as “used” or “spent” fuel assemblies, are highly radioactive and thermally hot. They are initially stored on site in a steel-lined storage pool to help shield the radiation and to cool the fuel. The spent-fuel pools were intended to serve as a temporary storage facility until the used fuel assemblies could be safely transferred to a permanent storage repository or a reprocessing facility. However, starting in the 1970s, interest in commercial reprocessing of used fuel diminished in the United States, and progress toward a permanent storage repository continued to fall behind schedule, forcing nuclear power plant operators to transfer used fuel from spent-fuel pools or wet storage into on-site dry cask storage facilities. Furthermore, delay in the ultimate disposition of used fuel in the United States raised the prospect of extended long-term storage and deferred transportation of used fuel at operating and decommissioned nuclear power plant sites.

Title 10 of the Code of Federal Regulations (10 CFR) Part 72, "Licensing Requirements for the Independent Storage of Spent Nuclear Fuel, High-Level Radioactive Waste, and Reactor-Related Greater than Class C Waste," establishes the requirements for storage of used nuclear fuel, high-level radioactive waste, and reactor-related greater than Class C (GTCC) waste. Part 72 does not govern spent fuel storage in pools associated with normal reactor operation, which is governed by 10 CFR 50. It establishes requirements for the following three categories of Independent Spent Fuel Storage Installation (ISFSI) licensing and certification of cask design:

1. Subpart C Issuance and Conditions of License: A *specific license* is a license for the receipt, handling, storage, and transfer of used fuel, high level radioactive waste, or GTCC waste that is issued to a named person, on an application filed pursuant to regulations in 10 CFR 72.

2. Subpart K General License for Storage of Spent Fuel at Power Reactor Sites: A *general license* authorizes a nuclear power plant licensed under 10 CFR 50, "Domestic Licensing of Production and Utilization Facilities," or 10 CFR 52, "Licenses, Certifications, and Approvals for Nuclear Power Plants," to store spent nuclear fuel in an ISFSI at a power reactor site. The general license is limited to the used fuel that the general licensee is authorized to possess at the site under the specific license for the site, and to the storage of used fuel in casks or canisters approved by the U.S. Nuclear Regulatory Commission (NRC). Thus, certain requirements for storage of used fuel in a generally licensed ISFSI are based on 10 CFR 50.

3. Subpart L Approval of Spent Fuel Storage Casks: A *Certificate of Compliance (CoC)* is the certificate issued by the NRC that approves the design of a used-fuel storage cask, in accordance with the provisions of 10 CFR 72, Subpart L.

Prior to 2010, a 20-year initial license term was authorized for a site-specific license for an ISFSI or a CoC for a used-fuel storage cask design. The term for specific license was in accordance with 10 CFR 72.42(a), which specifies that the initial license term for a site-specific ISFSI must be for a period not to exceed 20 years from the date of issuance. An existing site-specific ISFSI license may be renewed at the end of the initial term upon application by the licensee, prepared in accordance with the

requirements of 10 CFR 72.42(a); the license renewal term was also limited to 20 years. Similarly, a 20-year term for CoC was supported by the requirements of 10 CFR 72.236(g), which require that the used-fuel storage cask be designed to store the used fuel safely for at least 20 years. The CoC holders may also request a 20-year CoC reapproval (or renewal) period for a storage cask, in accordance with the conditions specified in 10 CFR 72.240.

In 2010, the NRC approved SECY-10-0056, "Final Rule: 10 CFR Part 72 License and Certificate of Compliance Terms," extending the terms for both general and specific ISFSI licenses and storage cask CoCs from a term not to exceed 20 years to a term not to exceed 40 years. That rule change was made effective in May 2011. The final rule, however, requires that any license renewal application must include an analysis that considers the effects of aging on structures, systems, and components (SSCs) important to safety for the requested period of extended operation. The basis for the aging management requirements was that similar requirements were imposed for the 40-year license renewal term approved for the specific licenses for the low-burnup (≤45 GWd/MTU) used fuel at the Surry, H.B. Robinson, and Oconee ISFSIs. Because the same cask design could be used at both specific- and general-license ISFSI sites, the same aging management requirements are imposed on Part 72 general licensees.

As the number of dry cask storage systems (DCSSs) has increased, reactor licensees have preferred the general license approach. A general license is subject to both Part 50 and Part 72 requirements. It relies on the existing infrastructure associated with reactor operation, such as fuel handling procedures and analysis, approved under Part 50. In contrast, a specific license application must include a siting evaluation, description of facilities and operational programs, and hazard analyses for these activities. However, several stand-alone ISFSIs are located at shut-down or decommissioned reactor sites where the infrastructure and facilities such as the spent-fuel pool and other used-fuel handling equipment have been dismantled. Therefore, the maintenance, aging management, and repacking options associated with ISFSIs at these sites may require special considerations. 10 CFR 72.13, "Applicability," identifies which Part 72 requirements apply to a specifically licensed ISFSI, a generally licensed ISFSI, and a CoC.

Applications for license or CoC renewal (for a period not to exceed 40 years) must be submitted to the NRC before the expiration of the existing license term. Applications for ISFSI license renewals must include the following: (1) time-limited aging analyses (TLAAs) that demonstrate that SSCs important to safety will continue to perform their intended function for the requested period of extended operation, and (2) a description of the aging management program (AMP) for management of issues associated with aging that could adversely affect SSCs important to safety. In addition, the application must include design basis information as documented in the most recently updated final Safety Analysis Report (SAR), as required by 10 CFR 72.70. Information contained in previous applications, statements, or reports filed with the Commission under the license may be incorporated by reference provided that those references are clear and specific.

The NRC has issued the Standard Review Plan (SRP) for renewal of used-fuel DCSS licenses and CoCs, NUREG-1927, under which NRC may renew a specific license or a CoC for a term not to exceed 40 years. Both the license and the CoC renewal applications must contain revised technical requirements and operating conditions (fuel storage, surveillance and maintenance, and other requirements) for the ISFSI and DCSS that address aging effects that could affect the safe storage of the used fuel. The information contained in the license and CoC renewal applications will require NRC review to verify that the aging effects on the SSCs in DCSSs/ISFSIs are adequately managed for

the requested period of extended operation. In 2014, most if not all of the ISFSIs located across the United States with more than 1,500 dry casks loaded with used fuel have initial license terms of 20 years; three ISFSIs (Surry, H.B. Robinson, and Oconee) have received renewed licenses for 40 years, and two other ISFSIs (Calvert Cliffs and Prairie Island) have applied for license renewal for 40 years. In addition, renewal of the CoC for the VSC-24 cask is pending.

With the exception of HI-STAR 100, two types of dry storage systems are currently in use in the United States: the direct-loaded casks that are typically thick-walled or metal-shielded, and canister-based storage systems consisting of a relatively thin-walled canister that is placed inside a thick-walled concrete shielded storage module or overpack. The direct-loaded cask storage systems do not require a transfer cask to be moved to the storage pad. In these systems, used-fuel assemblies are placed in a basket that is an integral part of the storage cask, which is typically sealed using a bolted lid with redundant seals. In contrast, in the canister-based storage system, the used-fuel assemblies are placed in a thin-walled (typically 12.5-mm or 0.5-in. thick) stainless or carbon steel cylindrical canister that is sealed with an inner and outer welded lids. The canister is placed in either a cylindrical concrete and steel overpack or a concrete vault-type storage module. The storage module or overpack protects the canister against external natural phenomena and man-made events. The overpack or module is closed with a bolted lid or door. The canisters are typically designed to be dual-purpose; they can be stored or transported if they are placed in a suitable storage or transportation overpack.

This report examines issues related to managing aging effects on the SSCs in DCSSs/ISFSIs for extended long-term storage and subsequent transportation, i.e., post-storage transportability, of used fuels, following an approach similar to that of the Generic Aging Lessons Learned (GALL) report, NUREG-1801, for the aging management and license renewal of nuclear power plants. The report contains five chapters and two appendices on quality assurance for AMPs for used-fuel DCSSs and a comparison of TLAAs and AMPs developed in this report with those in GALL. Chapter I of the report provides an overview of the ISFSI license renewal process based on 10 CFR 72 and the guidance provided in NUREG-1927. Chapter II contains definitions and terms for structures and components in DCSSs, materials, environments, aging effects, and aging mechanisms. Chapter III and Chapter IV contain generic TLAAs and AMPs, respectively, that have been developed for managing aging effects on the important-to-safety SSCs in the DCSS designs described in Chapter V. The summary descriptions and tabulations of evaluations of AMPs and TLAAs for the SSCs that are important to safety in Chapter V include DCSS designs (i.e., NUHOMS; HI-STORM/HI-STAR 100; Transnuclear, Inc. TN metal cask; NAC International Inc. dry storage technology (S/T, MPC, UMS, and MAGNASTOR storage casks); EnergySolutions Ventilated Storage Cask (VSC-24); Westinghouse MC-10 metal dry storage cask; CASTOR V/21 and X/33 dry storage casks; and W150 FuelSolutions storage system) that have been and continue to be used by utilities across the country for dry storage of used fuel to date.

The goal of this report is to help establish the technical basis for extended long-term storage and subsequent transportation of used fuel, which may occur multiple times before final disposal at a mined repository or geological disposal facility. For consistency with 10 CFR 72.42 terminology, this report uses “initial license term,” where the term could be 20 or 40 years; “license renewal term,” where the term is up to 40 years; and “extended long-term storage,” where the term is beyond the license renewal term. The phrase “requested period of extended operation” is also used throughout the report for the license renewal term that could be less than 40 years and for extended long-term storage.

I.1 Overview of License Renewal Process

A licensee must submit a license renewal application at least 2 years before the expiration of a specific license in accordance with the requirements of 10 CFR 72.42(b), or a holder of a CoC must submit an application at least 30 days before the expiration of a general license or the associated CoC in accordance with the requirements of 10 CFR 72.240(b). A license or CoC is renewed on the bases that the existing licensing basis continues to remain valid and the intended functions of the SSCs important to safety are maintained during the requested period of extended operation. Therefore, the license renewal application includes the following: (1) general information related to the licensee/CoC holder and review of regulatory requirements, (2) scoping evaluation to identify the SSCs in the ISFSI or DCSS that are within the scope of license renewal, and (3) for all in-scope SSCs, an Aging Management Review (AMR) that includes (i) identification of their materials of construction and the operating environments, (ii) a list of potential aging effects and degradation mechanisms, and (iii) comprehensive AMPs that manage the effects of aging on SSCs that are important to safety and TLAAs that demonstrate that SSCs important to safety will continue to perform their intended function for the requested period of extended operation. The application for the renewal of an ISFSI or DCSS license or CoC must contain revised technical requirements and operating conditions (e.g., fuel storage, surveillance and maintenance, and other requirements) for the ISFSI and DCSS that address aging effects that could affect the safe storage of the used fuel. Figure I.1, adapted from NUREG-1927, presents a flowchart of the license renewal process.

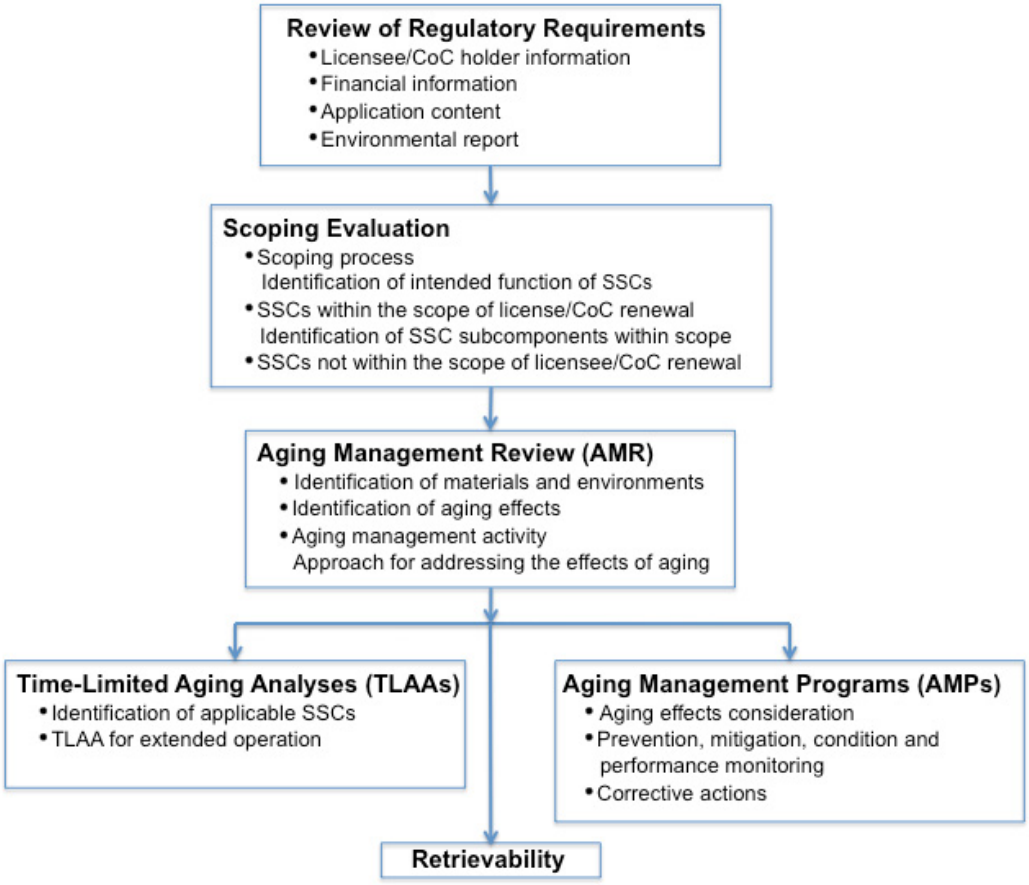

Figure I.1: Flowchart of the license renewal process (adapted from NUREG-1927).

The items in Figure I.1 summarize the review of regulatory requirements in 10 CFR 72 that may be applicable to the license renewal process, the scoping evaluation, AMR, TLAAs, and AMPs. Pursuant to 10 CFR 72.42(b), the application must include design basis information as documented in the most recently updated final SAR, as required by 10 CFR 72.70. Information contained in previous applications, statements, or reports filed with the Commission under the license may be incorporated by clear and specific reference. The contents of the application for renewal of licenses or CoCs are in accordance with 10 CFR 72, Subparts B and L, respectively. For specific licenses, as required by 10 CFR 51.60, "Environmental Report—Materials Licenses," and 10 CFR 72.34, "Environmental Report," the renewal application contains an environmental report, or its supplement, that includes the information specified in 10 CFR 51.45, "Environmental Report—General Requirements."

If there have been any modifications in the design of the SSCs, or if some components of the ISFSI or DCSS were replaced in accordance with 10 CFR 72.48, all additional information related to the updated final SAR, and changes or additions to the technical specifications, should be included in the application. All supporting information and documents incorporated by reference should be identified. Furthermore, within the context of licensing basis for the DCSS or ISFSI, these and other site-specific documents should be reviewed to identify whether any other NRC directives, such as regulatory guides and generic letters, as well as guidance provided in interim staff guidance (ISG) or Nuclear Regulatory Commission Regulation (NUREG) reports, are relevant and applicable as aging management activities for license renewal.

Page intentionally blank

I.2 Scoping Evaluation

The scoping process identifies the SSCs of the ISFSI or DCSS that should be reviewed for aging effects. Figure I.2, adapted from NUREG-1927, presents a flowchart of the scoping evaluation process. Specifically, the application should include the following information related to the scoping evaluation:

- A description of the scoping process and methodology for inclusion of SSCs in the renewal scope;
- A list of the SSCs (and appropriate subcomponents) that are identified as within the scope of renewal, their intended function, and safety classification or basis for inclusion;
- A list of the sources of information used for scoping; and
- Any discussion needed to clarify the process, SSC designations, or sources of information used.

The guidance provided in Section 2.4 of NUREG-1927 and the methodology of NUREG/CR-6407 (McConnell et al. 1996) are used in this report in determining the classification of DCSS components according to importance to safety. The components of a DCSS may be grouped into three safety categories similar to those defined in Section 3 of NUREG/CR-6407:

- *Category A – Critical to safe operation*: Includes SSCs whose failure could directly result in a condition adversely affecting public health and safety. The failure of a single item could cause loss of primary containment leading to release of radioactive material, loss of shielding, or unsafe geometry compromising criticality control.

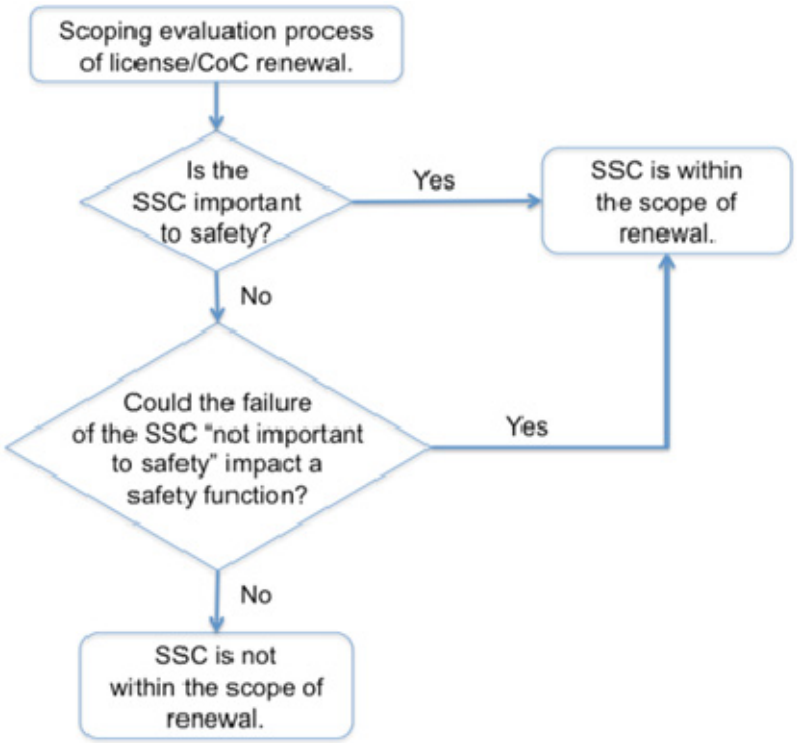

Figure I.2: Flowchart of scoping evaluation (adapted from NUREG-1927).

- *Category B – Major impact on safety*: Includes SSCs whose failure or malfunction could indirectly result in a condition adversely affecting public health and safety. The failure of a Category B item, in conjunction with the failure of an additional item, could result in an unsafe condition.
- *Category C – Minor impact on safety*: Includes SSCs whose failure or malfunction would not significantly reduce the packaging (or storage) effectiveness and would not be likely to create a situation adversely affecting public health and safety.

NUREG-1927 defines the important safety functions of the SSCs in a DCSS as (1) criticality, (2) shielding, (3) confinement, (4) heat transfer, (5) structural integrity, and (6) retrievability. For the purpose of indexing the SSCs identified in Chapter V of this report, these important safety functions are abbreviated and rearranged with the following definitions:

- *CB – Confinement Boundary*: The components and supporting materials that are incorporated into the storage system design for the purpose of retaining the radioactive material during normal and accident conditions.
- *CC – Criticality Control*: The components and supporting materials that are incorporated into the storage system design for the purpose of maintaining the contents in a subcritical configuration during normal and accident conditions.
- *RS – Radiation Shielding*: The components and supporting materials that are incorporated into the storage system design for the purpose of reducing radiation emitted by the contents during normal and accident conditions.
- *HT – Heat Transfer*: The components and supporting materials that are incorporated into the storage system design for the purpose of removing decay heat under normal conditions and protecting temperature-sensitive components (e.g., lead shielding and seals) under accident conditions.
- *SS – Structural Support*: The components and supporting materials that are incorporated into the storage system design for the purpose of maintaining the structure in a safe condition during normal and accident conditions.
- *FR – Fuel Retrievability*: The components and supporting materials that are incorporated into the storage system design for the purpose of operations support (e.g., for loading, unloading, maintenance, monitoring, or transporting) and the failure of which could impact fuel retrievability.

According to Section 2.4.2 of NUREG-1927, the SSCs within the scope of license renewal generally fall into the following two scoping categories:

1. Those that are classified as important to safety because they are relied upon to do one of the following:
   - Maintain the conditions required by the regulation, license, or CoC to store used fuel safely.
   - Prevent damage to the used fuel during handling and storage.
   - Provide reasonable assurance that used fuel can be received, handled, packaged, stored, and retrieved without undue risk to the health and safety of the public.

2. Those that are classified as *not* important to safety but, according to the licensing basis, whose failure could prevent fulfillment of a function that is important to safety, or whose failure as support SSCs could prevent fulfillment of a function that is important to safety.

The in-scope SSCs are further reviewed to identify and describe the subcomponents that support the intended function or functions of the SSCs. All SSCs that are important to safety, or whose failure may prevent a function that is important to safety, should be identified in the renewal application in accordance with the applicable requirements of 10 CFR 72.3, 10 CFR 72.24, 10 CFR 72.120, 10 CFR 72.122, and 10 CFR 72.236.

Typically, all equipment connected with cask loading and unloading, such as vacuum-drying equipment, welding and sealing equipment, transfer casks and transporter devices, lifting rigs and slings, and other tools, fittings, and measuring devices are not important to safety and, therefore, not within the scope for license renewal. Also, unless the DCSS is anchored to the basemat (pad), the pad is not within the scope of license renewal because it does not perform a safety function or its failure is considered not to impact a safety function (NUREG-1927). For facilities where the DCSS is anchored to the pad, the pad is classified as important to safety (e.g., during a seismic event) and included in the AMR. In this report, the pad and approach slab are considered within the scope of license renewal because differential settlement of the approach slab may prevent retrieval, for example, of the dry shielded canister from the NUHOMS storage module.

Page intentionally blank

I.3 Aging Management Review

The purpose of the aging management review (AMR) is to assess all SSCs, determined to be within the scope of renewal, that are subject to aging effects and the associated aging degradation processes, and define potential aging management activities (AMAs) needed to manage all aging effects that could adversely affect the ability of these SSCs to perform their intended functions during the requested period of extended operation. The management of aging effects of SSCs in used-fuel dry casks for extended long-term storage is similar to that required for renewal of licenses for nuclear power plants under 10 CFR Part 54, "Requirements for Renewal of Operating License for Nuclear Power Plants." Figure I.3, adapted from NUREG-1927, presents a flowchart of the AMR process for the SSCs in the license renewal of ISFSIs.

Pursuant to 10 CFR 72.24(d), for a specific license, the SAR for the ISFSI contains an analysis and evaluation of the design and performance of SSCs important to safety, with the objective of assessing the impact on public health and safety resulting from the operation of the ISFSI. The design-basis information includes determination of (a) the margins of safety during normal operations and expected operational occurrences during the life of the facility, and (b) the adequacy of the prevention and mitigation measures (i.e., the adequacy of the SSCs provided for the prevention of accidents and the mitigation of the consequences of accidents, including natural and man-made phenomena and events). The conditions for spent fuel storage cask renewal are specified in 10 CFR 72.240. In addition, for specific and general licenses, 10 CFR 72.122(i) requires that the SAR should include instrumentation systems provided in accordance with cask design requirements to monitor conditions that are important to safety under normal and accident conditions.

I.3.1 Relevant Regulations for Aging Management Review

The design criteria contained in the SAR establish the design, fabrication, construction, testing, maintenance, and performance requirements for SSCs important to safety. The requirements for general design criteria for ISFSIs are contained in 10 CFR 72.120(a). The design requirements in 10 CFR 72.120(d) specify that for specific licenses, ISFSIs must be designed, made of materials, and constructed to ensure that there will be no significant chemical, galvanic, or other reactions between or among the storage system components, spent fuel, and/or high-level waste, including possible reaction with water during wet loading and unloading operations. Also, the behavior of materials under irradiation and thermal conditions must be taken into account.

For specific and general licenses, the overall requirements for protection against environmental conditions and natural phenomena and protection against fire and explosions are contained in 10 CFR 72.122(b) and (c), respectively. Also, as part of the general design criteria, 10 CFR 72.122(f) requires that systems and components that are important to safety be designed to permit inspection, maintenance, and testing. In addition, 10 CFR 72.122(h) establishes the requirements for confinement barriers and systems, which include capability for continuous monitoring in a manner such that the licensee will be able to determine when corrective action needs to be taken to maintain safe storage conditions. For dry storage facilities, periodic monitoring is acceptable, provided the monitoring instrumentation system and monitoring period are based on the dry storage cask design requirements. The requirements in 10 CFR 72.122 also specify that used-fuel cladding must be protected during storage against degradation that leads to gross rupture, or the fuel must be otherwise confined such that its degradation during storage will not pose operational safety problems with respect to its removal from storage. Such capabilities are generally included in

the original design of the SSCs. Furthermore, 10 CFR 72.122(l) requires that storage systems be designed to allow ready retrieval of the spent fuel and reactor-related GTCC waste for further processing or disposal.

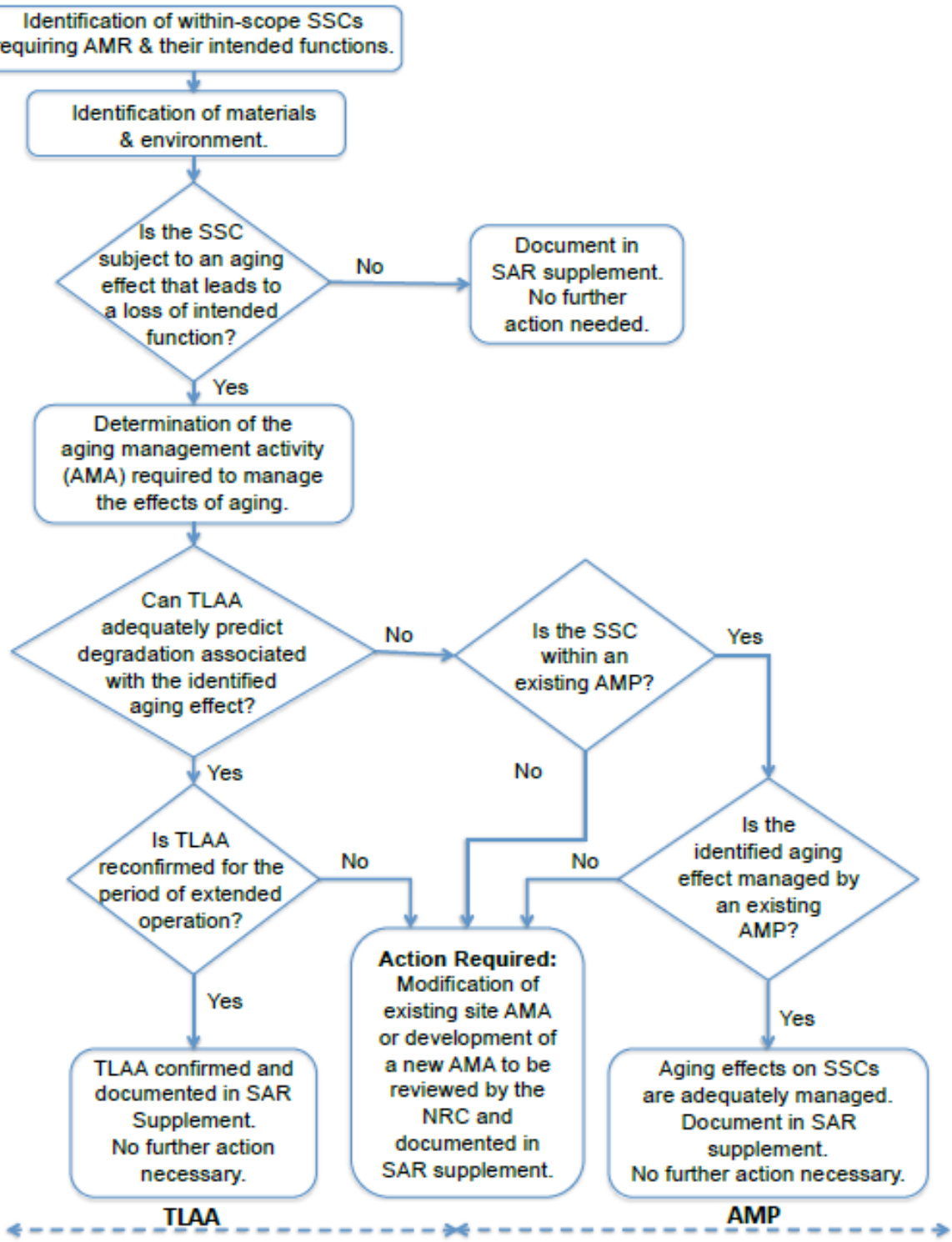

Figure I.3: Flowchart of the aging management review (AMR) process (adapted from NUREG-1927).

For specific licenses, the criteria for used fuel, high-level radioactive waste, and other radioactive waste storage and handling in 10 CFR 72.128(a) specify that the storage facilities for used fuel and such waste must be designed to ensure adequate safety under normal and accident conditions, and include the following:

1. A capability to test and monitor components important to safety,
2. Suitable shielding for radioactive protection under normal and accident conditions,
3. Confinement structures and systems,
4. A heat-removal capability having testability and reliability consistent with its importance to safety, and
5. Means to minimize the quantity of radioactive wastes generated.

The quality assurance and test control requirements must ensure that all testing performed to demonstrate that the SSCs will perform satisfactorily in service is in accordance with 10 CFR 72.162.

The design requirements specify that the spent-fuel handling, packaging, transfer, and storage systems must be designed to be maintained subcritical and to ensure that, before a nuclear criticality accident is possible, at least two unlikely, independent, and concurrent or sequential changes will have occurred in the condition essential to nuclear criticality safety. The design for handling, packaging, transfer, and storage systems must include margins of safety for the nuclear criticality parameters that are commensurate with the uncertainties in the data and methods used in calculations. Furthermore, the methods for criticality control require that where solid neutron-absorbing materials are used, the design must provide for positive means of verifying their continued efficacy.

The quality assurance requirements of 10 CFR 72.170 state that measures must be taken to control materials, parts, or components that do not conform to their respective requirements in order to prevent their inadvertent use or installation. Nonconforming items must be reviewed and accepted, rejected, or repaired in accordance with documented procedures.

The specific requirements for approval and fabrication of spent-fuel storage casks are contained in 10 CFR 72.236. Some of the significant requirements are excerpted as follows:

(b) Design bases and design criteria must be provided for SSCs important to safety.

(c) The spent-fuel storage cask must be designed and fabricated so that the spent fuel is maintained in a subcritical condition under credible conditions.

(d) Radiation shielding and confinement features must be provided that are sufficient to meet the requirements in 10 CFR 72.104 and 72.106.

(e) The spent-fuel storage cask must be designed to provide redundant sealing confinement systems.

(f) The spent-fuel storage cask must be designed to provide adequate heat removal capacity without active cooling systems.

(g) The spent-fuel storage cask must be designed to store the spent fuel safely for the term proposed in the application and to permit maintenance as required.

(l) The spent-fuel storage cask and its systems important to safety must be evaluated, by appropriate tests or by other means acceptable to the NRC, to demonstrate that they will reasonably maintain confinement of radioactive material under normal, off-normal, and credible accident conditions.

(m) To the extent practicable in the design of spent-fuel storage casks, consideration should be given to compatibility with removal of the stored spent fuel from a reactor site, transportation, and ultimate disposition by the Department of Energy.

For license renewal, the licensee or certificate holder should review its SAR and define all management activities to ensure that all aging effects are adequately managed and that the SSCs can perform their intended functions, consistent with the existing licensing basis, for the requested period of extended operation. The AMA for the SSCs that are subject to potential aging effects involves either a TLAA or an AMP, or both.

I.3.2 Time-Limited Aging Analysis

A time-limited aging analysis (TLAA) is a process to assess SSCs that have a time-dependent operating life, as defined by a design basis such as the American Society of Mechanical Engineers (ASME) Boiler and Pressure Vessel Code, Section III, Division 1, Subsection NB or Division 3, Subsection WC; American Concrete Institute (ACI) 349 or 318; and American Institute of Steel Construction (AISC) Codes. Time dependency may entail fatigue life (cycles), change in a mechanical property such as fracture toughness or strength of materials due to irradiation, or time-limited operation of a component. Examples of possible TLAAs include (a) fatigue of metal and concrete structures and components, (b) corrosion analysis of metal components (general corrosion only), (c) time-dependent degradation of neutron absorbing materials, (d) time-dependent degradation of radiation shielding materials, and (e) other site-specific TLAAs.

Also, the original design of ISFSIs or DCSSs may not have considered the conditions or aging-related degradation processes associated with extended long-term storage, but these need to be addressed to ensure that the existing licensing basis continues to remain valid during the requested period of

extended operation. Examples of such issues include potential degradation of concrete structures due to long-term exposure to temperatures above 150°C (302°F) and/or gamma radiation; initiation of stress corrosion cracking (SCC) in welded canisters as a function of time, temperature, and environmental conditions; or hydride reorientation in PWR high-burnup cladding alloys. An AMR of these issues may involve a TLAA. Furthermore, as discussed in Section I.3.1, 10 CFR 72.124(b) requires that where solid neutron-absorbing materials are used, the design must provide for positive means of verifying their continued efficacy. For dry spent fuel storage systems, continued efficacy may be confirmed by a demonstration or analysis before use, showing that significant degradation of the neutron absorbing materials cannot occur over the life of the facility.

I.3.3 Aging Management Program

The purpose of the aging management program (AMP) is to ensure that the aging effects do not result in a loss of the intended safety functions of the SSCs that are within the scope of the original license agreements, or in the case of license renewal, for the term of the renewal. Managing aging effects on SSCs in used-fuel DCSSs during extended long-term storage includes identification of the materials of construction and the environments to which these materials are exposed. Service conditions, such as temperature, wind, humidity, rain/snow/water, marine salt, radiation field, and gaseous environment (e.g., external air environment and internal inert-gas environment such as helium), must be monitored in order to assess and manage the potential aging effects due to environmental degradation of materials. For example, the combination of aging effects and aging mechanisms for concrete structures may include scaling, cracking, and spalling due to freeze-thaw, leaching of calcium hydroxide, aggressive chemical attack, reaction with aggregates, shrinkage, or settlement; loss of material due to corrosion or abrasion and cavitation; and loss of strength and modulus due to elevated temperature or radiation.

The aging effects/mechanisms for structural steel and reinforcing steel (rebar) may include loss of material due to corrosion; loss of fracture toughness due to irradiation; and SCC. The aging effects/mechanisms for the cask internals may include loss of material due to corrosion; change in dimensions due to creep; loss of preload due to stress relaxation; crack initiation and growth due to SCC; and embrittlement of cladding due to hydride reorientation in PWR high-burnup cladding alloys.

Also, as discussed in Section I.3.2, the original design of the ISFSI or DCSS may not have considered conditions or aging-related degradation processes unique to extended long-term storage, and these must be addressed to ensure that the existing licensing basis continues to remain valid during the requested period of extended operation. Furthermore, the original design of the dry storage facility may not permit the types of conditions and/or performance monitoring and inspections that are required for extended long-term storage. Therefore, an existing AMP may need to be augmented, or a site-specific AMP may need to be developed, to ensure that the functional and structural integrity of the storage facility is maintained during the requested period of extended operation.

However, since ISFSIs or DCSSs consist of mostly passive SSCs, their degradation may not be readily apparent from a simple condition-monitoring program such as periodic inspection, and may require other AMPs that are generally of four types:

- *Prevention*: Programs that keep the aging effects from occurring, e.g., coating programs to prevent external corrosion of a carbon steel overpack component, and adequate drying to prevent hydride reorientation in PWR high-burnup cladding alloys.

- *Mitigation*: Programs that slow the effects of aging, e.g., cathodic protection systems used to minimize corrosion of metallic components embedded in concrete.
- *Condition Monitoring*: Programs that search for the presence and extent of aging effects, e.g., visual inspection of concrete structures for cracking and sensors that monitor temperatures, pressures, or fission gas such as Kr-85.
- *Performance Monitoring*: Programs that verify the ability of the SSCs to perform their intended safety functions, e.g., periodic radiation and temperature monitoring.

A typical example of a Condition Monitoring program for used-fuel dry casks is an analysis of historic radiation survey data. The operating experience of the used-fuel dry casks, including corrective actions and design modifications, is an important source of information for evaluating the ongoing conditions of the SSCs and for root-cause determinations. Such information is important to safety and can be used to define mitigation programs that prevent similar recurrences in a timely manner.

While the types and the details of an AMP may vary depending on the specific SSC, the ten elements of an AMP (based on NUREG-1927 and presented in Table I.1) are used to describe the methodology and its implementation of the AMP in managing the aging effects on SSCs in DCSSs for extended long-term storage. The evaluation process of an AMP is similar to that used in NUREG-1801, Rev. 2, by utilities and the NRC for license renewal of operating nuclear power plants.

However, as more information becomes available from operating experience, lead canister/cask inspections, other research and development programs, new capabilities for detection of aging effects and monitoring and trending, should be evaluated and the aging management activities should be updated to ensure timely detection and accurate prediction of aging effects. The operations-based aging management concept of analysis and assessments (toll gates), described in NEI 14-03, should provide periodic assessments of new aggregated information as they become available.

Table I.1 Definitions of Ten Elements in an AMP for Managing Aging Effects in SSCs of DCSSs/ISFSIs.

	AMP Element	Description
1.	Scope of the program	The scope of the program should include the specific structures and components subject to an AMR.
2.	Preventive actions	Preventive actions should mitigate or prevent the applicable aging effects.
3.	Parameters monitored or inspected	Parameters monitored or inspected should be linked to the effects of aging on the intended functions of the particular structure and component.
4.	Detection of aging effects	Detection of aging effects should occur before there is a loss of any structure's or component's intended function. This element includes aspects such as method or technique (i.e., visual, volumetric, or surface inspection), frequency, sample size, data collection, and timing of new/one-time inspections to ensure timely detection of aging effects.
5.	Monitoring and trending	Monitoring and trending should provide for prediction of the extent of the effects of aging and timely corrective or mitigative actions.
6.	Acceptance criteria	Acceptance criteria, against which the need for corrective action will be evaluated, should ensure that the particular structure's and component's intended functions are maintained under all current licensing basis design conditions during the period of extended operation.
7.	Corrective actions	Corrective actions, including root-cause determination and prevention of recurrence, should be timely.

Table I.1 Definitions of Ten Elements in an AMP for Managing Aging Effects in SSCs of DCSSs/ISFSIs.

	AMP Element	Description
8.	Confirmation process	The confirmation process should ensure that preventive actions are adequate and appropriate corrective actions have been completed and are effective.
9.	Administrative controls	Administrative controls should provide a formal review and approval process.
10.	Operating experience	Operating experience involving the AMP, including past corrective actions resulting in program enhancements or additional programs, should provide objective evidence to support a determination that the effects of aging will be adequately managed so that the structures' and components' intended functions will be maintained during the period of extended operation.

Page intentionally blank

I.4 Overview of Managing Aging Effects

As stated earlier in Section I, the goal of this report is to help establish the technical basis for extended long-term storage and subsequent transportation, i.e., post-storage transportability, of used fuel, which may occur multiple times before final disposal at a mined repository or geological disposal facility. The report is being prepared in a format similar to that of NUREG-1801, in that it shares the same principles generally adopted by the NRC in the aging management of SSCs for license renewal of nuclear power plants. The report closely follows the guidance provided in the "Standard Review Plan for Renewal of Spent Fuel Dry Cask Storage System Licenses and Certificates of Compliance," NUREG-1927.

Managing aging effects on DCSSs for extended long-term storage and subsequent transportation consists of three steps: (1) perform a scoping evaluation to identify the SSCs in the ISFSI or DCSS that are within the scope of license renewal, their materials of construction, and the operating environments; (2) for each in-scope SSC, list the potential aging effects and degradation mechanisms; and (3) provide an AMR to define comprehensive AMPs and TLAAs that manage the aging effects for each of these SSCs. Overviews of the license renewal process, scoping evaluation, and AMR are given in Sections I.1, I.2, and I.3, respectively. Chapter II describes the definitions and terms used in this report for structures and components, materials, environments, aging effects, and significant aging degradation mechanisms associated with DCSSs/ISFSIs of used fuel.

Guidance on the evaluation of TLAAs is provided in Chapter III of this report. TLAAs are required for those SSCs that are subject to time-dependent degradation and meet the criteria of NUREG-1927, Section 3.5, "Identification of TLAAs." These criteria are similar to those of 10 CFR 54.21(c) for the renewal of operating licenses for nuclear power plants. For example, the guidelines stated in NUREG-1927, Section 3.5.1(5)(i), are equivalent to those of 10 CFR 54.21(i) or (ii) in that the analyses have been projected to the end of the requested period of extended operation, and the guidelines stated in Section 3.5.1(5)(ii) are equivalent to those of 10 CFR 54.21(iii) in that the effects of aging on the intended functions of the SSC will be adequately managed for the requested period of extended operation (i.e., potential effects of time-dependent aging degradation evaluated in the TLAA will be managed by an AMP that includes future inspections or examinations).

The generic AMPs that are developed for managing the aging effects for in-scope SSCs are described in Chapter IV. In general, the nondestructive examination of ISFSI and DCSS components is to be performed in conformance with the ASME Code Section XI requirements. This practice is consistent with the recommendations of NUREG/CR-7116 (Sindelar et al. 2011), which states that the inspection program recommended for the extended storage and transportation of spent nuclear fuel should be consistent with the requirements of ASME Section XI. In addition, NRC ISG-4, Rev. 1, states that "welding processes, weld inspection criteria, and personnel qualifications should be verified as being in conformance with the ASME Code," and that dye-penetrant examinations should be performed in accordance with ASME Code Section V. Both this document and NUREG-1567 specify that the critical flaw size should be calculated in accordance with ASME Section XI methodology.

The various DCSS designs currently in use in the United States are described in Chapter V. For each DCSS design, tables have been constructed that identify SSCs and their subcomponents by Item; Structure and/or Component (with rankings of Safety Categories A, B, and C defined in Section I.2); Intended Safety Function (e.g., CB, CC, RS, HT, SS, and/or FR, as defined in Section I.2); Material,

Environment, Aging Effect/Mechanism; AMP (or TLAA); and Program Type. Each line item in a given table represents a unique component/material/environment/aging effect/mechanism combination and the AMP or TLAA for managing the aging effects such that the intended function of the component is maintained during the requested period of extended operation. Separate line items are included in these AMR tables not only for SSCs that are important to safety, but also for those SSCs that may not have such a function but whose failure could affect the performance of the SSCs that are important to safety.

For a specific structure or component listed in the Chapter V tables, if the AMP is consistent with the applicable requirements of 10 CFR 72 and considered to be adequate to manage aging effects, the entry in the "Program Type" column in the table indicates a generic program described in Chapter IV of this report. For these AMPs, no further evaluation is recommended for license renewal. If there is no acceptable AMP to manage the aging effects for a specific combination of component/material/ environment/aging effect/mechanism, the entry in the "Program Type" column recommends further evaluation, with details that may augment the existing AMP or become part of a site-specific AMP.

It should be noted that technically speaking, managing aging effects on DCSSs for extended long-term storage and transportation of used fuel "begins" shortly after the used-fuel assemblies are loaded into a canister (or cask) under water in the spent-fuel pool. The canister (or cask) containing the used-fuel assemblies is then drained, vacuum dried, and back-filled with helium through the drain port after the lid is closed, either by welding or by bolted closure. The welded canister (after being placed inside a transfer cask) and the bolted cask are moved to an outdoor concrete pad of an ISFSI, where they would stay for 20 or 40 years of the initial license term, and up to another 40 years for a license renewal term, according to 10 CFR 72.42. Approximately 2,000 dry casks have begun long-term storage under the initial license terms; some of them have been in storage for over 20 years and are already in the license renewal term for up to 40 years.

Transferring from pool to pad or from wet to dry storage is an abrupt change of environment for the used-fuel assemblies, and the effects are most pronounced during vacuum drying, especially for high-burnup fuel, because of the potential of cladding radial hydride formation and embrittlement (Daum et al. 2006, 2008; Billone et al. 2011, 2012, 2013; Hansen et al. 2012). The possibility of hydride reprecipitation diminishes only after the cladding temperature has dropped below 200°C (392°F), owing to the decrease of fission-product decay heat during prolonged cooling, which may occur 20 to 25 years after the high-burnup used fuel assemblies are placed in dry storage. Information on operating experience with long-term storage of high-burnup used fuel assemblies is needed to better understand this phenomenon. Until such information is available, this report recommends preventing and/or minimizing cladding embrittlement by radial hydrides during drying, transfer, and early stages of storage. This will maintain the configuration of the used fuel in the dry canister (or cask) and ensure retrievability of the used fuel and its transportability after extended long-term storage.

Consideration of aging effects on DCSSs for extended long-term storage of used fuel is no different from that required during the certificate and/or license renewal term of the DCSSs/ISFSIs. The principles and guidance developed by the NRC in NUREG-1927 are applicable to extended long-term storage, as the requested period of extended operation, or license term, reaches 40, 60, or 80 years. The term in the initial or renewal license is important because it indicates a finite period of

operation. This does not rule out license renewal for multiple terms, as long as aging effects are adequately managed.

Managing aging effects on DCSSs for extended long-term storage and subsequent transportation of used fuel requires knowledge and understanding of the various aging degradation mechanisms for the materials of the SSCs and their environmental exposure conditions for the requested period of extended operation. The operating experience involving the AMPs, including the past corrective actions resulting in program enhancements or additional programs, should provide objective evidence to support a determination that the effects of aging will be adequately managed so that the intended functions of the SSCs will be maintained during the requested period of extended operation. Compared to nuclear power plants, the operating experience of the DCSSs and ISFSIs is not as extensive (because of the passive nature of these systems and shorter storage periods of less than 30 years); however, evaluations have been performed on the NRC's Requests for Additional Information (RAIs) on applications for renewal of licenses for ISFSIs, as well as the applicant's responses to the RAIs that were accepted by NRC, to assess their relevance to the TLAAs and AMPs described in Chapter III and Chapter IV, respectively, of this report. Those found relevant have been incorporated into the TLAAs and AMPs.

Managing aging effects on DCSSs for extended long-term storage and subsequent transportation of used fuel depends on AMPs to prevent, mitigate, and detect aging effects on the SSCs early, by means of condition and/or performance monitoring. Detection of aging effects should occur before there is a loss of any structure's or component's intended function. Among the important aspects of detection are method or technique (i.e., visual, volumetric, or surface inspection), frequency, sample size, data collection, and timing of new/one-time inspections to ensure timely detection of aging effects. The challenges in the detection of aging effects will invariably involve accessibility issues for inspection and monitoring and the frequency of inspection and monitoring (i.e., periodic versus continuous). Ongoing industry programs such as EPRI's integrated plan for addressing potential chloride-induced SCC of austenitic stainless steel DCSS canisters and the High-burnup Dry Storage Cask Research and Development Project, as well as separate effects studies conducted by the DOE national laboratories and abroad, should generate data and information in the future for use in aging management of DCSSs/ISFSIs for extended long-term storage and subsequent transportation of used fuel.

Quality assurance (QA) for AMPs is discussed in Appendix A. As stated in that appendix, those aspects of the AMR process that affects the quality of important-to-safety SSCs are subject to the QA requirements of 10 CFR 72, Subpart G, "Quality Assurance." For non-important-to-safety SSCs that are subject to AMAs, the 10 CFR 72, Subpart G, QA program would apply in a graded approach. For general licensees, the 10 CFR 72 QA program may be implemented under the 10 CFR 50, Appendix B, QA program, which has been previously approved by the Commission.

As mentioned earlier, the goal of this report is to help establish the technical basis for extended long-term storage and subsequent transportation of used fuel, which may occur multiple times before final disposal at a mined repository or geological disposal facility. It is suggested that future efforts should include development of additional TLAAs and AMPs that may be deemed necessary and further evaluation of the adequacy of the generic TLAAs and AMPs that may need augmentation. Industry and site-specific operating experience from the various DCSSs/ISFSIs located across the country should be periodically examined to (a) ascertain the potential aging effects on

the SSCs in the DCSSs, thereby enabling a compilation of existing AMAs, and (b) assess the efficacy of these AMAs for extended long-term storage and subsequent transportation of used fuel.

I.5 References

10 CFR Part 50, Domestic Licensing of Production and Utilization Facilities, Nuclear Regulatory Commission, 1-1-12 Edition, 2012.

10 CFR Part 50, Appendix B, Quality Assurance Criteria for Nuclear Power Plants, Nuclear Regulatory Commission, 1-1-12 Edition, 2012.

10 CFR 51.45, Environmental Report: General Requirements, Nuclear Regulatory Commission, 1-1-12 Edition, 2012.

10 CFR 51.60, Environmental Reports—Materials Licenses, Nuclear Regulatory Commission, 1-1-12 Edition, 2012.

10 CFR 52, Licenses Certifications, and Approvals for Nuclear Power Plants, Nuclear Regulatory Commission, 1-1-12 Edition, 2012.

10 CFR 54, Requirements for Renewal of Operating License for Nuclear Power Plants, Nuclear Regulatory Commission, 1-1-12 Edition, 2012.

10 CFR 54.21, Requirements for Renewal of Operating Licenses For Nuclear Power Plant: Contents of Application—Technical Information, Nuclear Regulatory Commission, 1-1-12 Edition, 2012.

10 CFR 72, Licensing Requirements for the Independent Storage of Spent Nuclear Fuel, High-Level Radioactive Waste, and Reactor-Related Greater than Class C Waste, Nuclear Regulatory Commission, 1-1-12 Edition, 2012.

10 CFR 72.3, Definitions, Office of the Federal Register, Nuclear Regulatory Commission, 1-1-12 Edition, 2012.

10 CFR 72.13, Applicability, Nuclear Regulatory Commission, 1-1-12 Edition, 2012.

10 CFR 72.24, Contents of Application: Technical Information, Nuclear Regulatory Commission, 1-1-12 Edition, 2012.

10 CFR 72.34, Environmental Report, Nuclear Regulatory Commission, 1-1-12 Edition, 2012.

10 CFR 72.42, Duration of License; Renewal, Nuclear Regulatory Commission, 1-1-12 Edition, 2012.

10 CFR 72.48, Licensing Requirements for the Independent Storage of Spent Nuclear Fuel, High-Level Radioactive Waste, and Reactor-Related Greater than Class C Waste: Changes, Tests, and Experiments, Nuclear Regulatory Commission, 1-1-12 Edition, 2012.

10 CFR 72.70, Safety Analysis Report Updating, Nuclear Regulatory Commission, 1-1-12 Edition, 2012.

10 CFR 72.104, Criteria for Radioactive Materials in Effluents and Direct Radiation from an ISFSI or MRS, Nuclear Regulatory Commission, 1-1-12 Edition, 2012.

10 CFR 72.106, Controlled Area of an ISFSI or MRS, Nuclear Regulatory Commission, 1-1-12 Edition, 2012.

10 CFR 72.120, General Considerations, Nuclear Regulatory Commission, 1-1-12 Edition, 2012.

10 CFR 72.122, Overall Requirements, Nuclear Regulatory Commission, 1-1-12 Edition, 2012.

10 CFR 72.124, Criteria for Nuclear Criticality Safety, Nuclear Regulatory Commission, 1-1-12 Edition, 2012.

10 CFR 72.124(b), Criteria for Nuclear Criticality Safety, Methods of Criticality Control, Nuclear Regulatory Commission, 1-1-12 Edition, 2012.

10 CFR 72.128, Criteria for Spent Fuel, High-Level Radioactive Waste, and Other Radioactive Waste Storage and Handling, Nuclear Regulatory Commission, 1-1-12 Edition, 2012.

10 CFR 72.162, Test Control, Nuclear Regulatory Commission, 1-1-12 Edition, 2012.

10 CFR 72.170, Nonconforming Materials, Parts, or Components, Nuclear Regulatory Commission, 1-1-12 Edition, 2012.

10 CFR 72.236, Specific Requirements for Spent Fuel Storage Cask Approval and Fabrication, Nuclear Regulatory Commission, 1-1-12 Edition, 2012.

10 CFR 72.240, Conditions for Spent Fuel Storage Cask Renewal, Nuclear Regulatory Commission, 1-1-12 Edition, 2012.

10 CFR Part 72, Subpart B, License Application, Form, and Contents, Nuclear Regulatory Commission, 1-1-12 Edition, 2012.

10 CFR Part 72, Subpart C, Issuance and Conditions of License, Nuclear Regulatory Commission, 1-1-12 Edition, 2012.

10 CFR Part 72, Subpart G, Quality Assurance, Nuclear Regulatory Commission, 1-1-12 Edition, 2012.

10 CFR Part 72, Subpart K, General License for Storage of Spent Fuel at Power Reactor Sites, Nuclear Regulatory Commission, 1-1-12 Edition, 2012.

10 CFR Part 72, Subpart L, Approval of Spent Fuel Storage Casks, Nuclear Regulatory Commission, 1-1-12 Edition, 2012.

ACI 318, Building Code Requirements for Reinforced Concrete and Commentary, American Concrete Institute, Farmington Hills, MI, 2008.

ACI 349.3R, Evaluation of Existing Nuclear Safety-Related Concrete Structures, American Concrete Institute, Farmington Hills, MI, 2002.

ASME Boiler and Pressure Vessel Code, Section III, Rules for Construction of Nuclear Power Plant Components, Division 1, Subsection NB, Class 1 Components, American Society of Mechanical Engineers, New York, 2004.

ASME Boiler and Pressure Vessel Code, Section XI, Inservice Inspection of Nuclear Power Plant Components, American Society of Mechanical Engineers, New York, 2004.

Billone, M. C., Burtseva, T.A., Dobrzynski, J.P., McGann, D.P., Byrne, K., Han, Z., and Liu, Y.Y., Phase I Ring Compression Testing of High-Burnup Cladding, FCRD-USED-2012-000039, December 31, 2011.

Billone, M.C., Burtseva, T.A., and Liu, Y.Y., Baseline Studies for Ring Compression Testing of High-Burnup Fuel Cladding, FCRD-USED-2013-000040 (ANL 12/58), November 23, 2012.

Billone, M.C., Burtseva, T.A., and Einziger, R.E., Ductile-to-Brittle Transition Temperature for High-Burnup Cladding Alloys Exposed to Simulated Drying-Storage Conditions, J. Nucl. Mater. 433: 431–448 (2013).

Billone M.C., Burtseva, T.A., and Liu, Y.Y., Baseline Properties and DBTT of High-Burnup PWR Cladding Alloys, Proc. 17th Intl Symp. on Packaging and Transportation of Radioactive Materials, PATRAM 2013, San Francisco, CA, August 18-23, 2013.

Daum, R.S., Majumdar, S., Liu, Y.Y., and Billone, M.C., Radial Hydride Embrittlement of High-Burnup Zircaloy-4 Fuel Cladding, J. Nucl. Sci. Tech. 43(9): 1054–1067 (2006).

Daum, R.S., Majumdar, S., and Billone, M.C., Experimental and Analytical Investigation of the Mechanical Behavior of High-Burnup Zircaloy-4 Fuel Cladding, J. ASTM Intern. 5(4), Paper ID JAI101209 (2008).

Electric Power Research Institute. High Burnup Dry Storage Cask Research and Development Project: Final Test Plan, Contract No.: DE-NE-0000593, Rev. 0, February 27, 2014.

Hansen, B., Alsaed, H., Stockman, C., Enos, D., Meyer, R., and Sorenson, K., Gap Analysis to Support Extended Storage of Used Nuclear Fuel, Rev. 0, FCRD-USED-2011-000136 Rev. 0, U.S. Department of Energy, Office of Nuclear Energy, Used Fuel Disposition Campaign, Washington DC, January 31, 2012.

McConnell, J.W., Jr., Ayers, A.L., Jr., and Tyacke, M.J., Classification of Transportation Packaging and Dry Spent Fuel Storage System Components According to Importance to Safety, NUREG/CR-6407, Idaho National Engineering Laboratory, Idaho Falls, ID, February 1996.

NEI 14-03. Guidance for Operations-Based Aging Management for Dry Cask Storage, Nuclear Energy Institute, September 2014.

NRC ISG-4, Cask Closure Weld Inspections, Revision 1, Interim Staff Guidance, U.S. Nuclear Regulatory Commission, Washington, DC, May 1999.

NRC ISG-24, The Use of a Demonstration Program as Confirmation of Integrity for Continued Storage of High Burnup Fuel Beyond 20 Years, Revision 0, July 11, 2014.

NUREG-1567, Standard Review Plan for Spent Fuel Dry Storage Facilities, Final Report, Nuclear Regulatory Commission, Washington, DC, March 2000.

NUREG-1801, Generic Aging Lessons Learned (GALL) Report, Revision 2, Nuclear Regulatory Commission, Washington, DC, December 2010.

NUREG-1927, Standard Review Plan for Renewal of Spent Fuel Dry Cask Storage System Licenses and Certificates of Compliance—Final Report, U.S. Nuclear Regulatory Commission, Washington, DC, March 2011.

SECY-10-0056, Final Rule: 10 CFR Part 72 License and Certificate of Compliance Terms, Nuclear Regulatory Commission, Washington, DC, October 14, 2010.

Sindelar, R.L., Duncan, A.J., Dupont, M.E., Lam, P.S., Louthan, M.R., Jr., Skidmore, T.E., and Einziger, R.E., Materials Aging Issues and Aging Management for Extended Storage and Transportation of Spent Nuclear Fuel, NUREG/CR-7116, Savannah River National Laboratory, Aiken, SC, November 2011.

Waldrop, K., Electric Power Research Institute, letter to David Pstrak, Nuclear Regulatory Commission, EPRI's R&D Roadmap to Address Potential Stress Corrosion Cracking of Welded Stainless Steel Used Nuclear Fuel Storage Canisters, ADAMS ML13042A140, January 31, 2013.

II. DEFINITIONS AND TERMS FOR STRUCTURES, COMPONENTS, MATERIALS, ENVIRONMENTS, AGING EFFECTS, AND AGING MECHANISMS

The following tables define the terms used in Chapter V of this report, Application of Time-Limited Aging Analyses and Aging Management Programs.

II.1 Structures and Components

This report does not address scoping of structures and components (see Table II.1) for extending the duration or term of storage, i.e., license or CoC renewal. Scoping is canister/cask design and storage facility-specific, and the results depend on the facility design and current licensing basis. The inclusion of a certain structure or component in this report does not mean that this particular structure or component is within the scope of extending storage terms for all facilities. Conversely, the omission of a certain structure or component from this report does not mean that this particular structure or component is not within the scope of extending storage terms for any facilities.

Table II.1 Selected Definitions and Use of Terms for Describing and Standardizing Structures and Components.

Term	Definition as used in this document
Anchor studs	Devices used to attach the DCSS to the ISFSI pad at a site where the postulated seismic event, defined by the three orthogonal zero-period accelerations, exceeds the maximum limit permitted for free-standing installation. The anchor studs are preloaded to a precise axial stress, which is kept below the material yield stress, such that during the seismic event the maximum axial stress remains below the limit prescribed for bolts in the ASME Code, Section III, Subsection NF (for Level D conditions). The preload produces a compressive load, F, at the DCSS/pad interface. This compressive force would generate friction force (μF) at the interface resisting the horizontal (sliding) force exerted on the cask under the postulated design basis earthquake seismic event.
Bolting	Structural bolting, closure bolting, and all other bolting within the scope of license renewal. Closure bolting is necessary for joining the confinement/containment boundaries or where a mechanical seal is required.
Canister	A metal cylinder that is sealed at both ends and is used to perform the function of confinement, while a separate overpack performs the functions of shielding and protecting the canister from the effects of impact loading. *(NUREG-1571)*
Cask	A stand-alone device that performs the functions of confinement, radiological shielding, and physical protection of used fuel during normal, off-normal, and accident conditions. *(NUREG-1571)*
Confinement boundary	For a welded canister, the confinement boundary consists of the shell welded to a solid baseplate, a lid welded around the top circumference of the shell wall, the port cover plates welded to the lid, and the closure ring welded to the lid and MPC shell providing the redundant sealing. For a bolted closure cask, the confinement boundary consists of the cask shell, bottom plate, top lid, shell flange, and associated welds, including vent cover welds and the inner metallic O-ring lid seal.
Confinement systems	Those systems, including ventilation, that act as barriers between areas containing radioactive substances and the environment. *(10 CFR 72.3)*

Table II.1 Selected Definitions and Use of Terms for Describing and Standardizing Structures and Components.

Term	Definition as used in this document
Controlled area	The area immediately surrounding an ISFSI over which the licensee exercises authority and within which it performs ISFSI operations. *(10 CFR 72.3)*
Dry cask storage system (DCSS)	Any system that uses a cask or canister as a component in which to store used nuclear fuel without using water to remove decay heat. A DCSS provides confinement, radiological shielding, physical protection, and inherently passive cooling of its used nuclear fuel during normal, off-normal, and accident conditions. *(NUREG-1571)*
Fuel basket	A honeycombed structural weldment with square openings, which can accept a fuel assembly of the type for which it is designed.
Independent Spent Fuel Storage Installation (ISFSI)	A complex designed and constructed for the interim storage of used nuclear fuel, solid reactor-related greater-than-Class-C (GTCC) waste, and other radioactive materials associated with used fuel and reactor-related GTCC waste storage. *(10 CFR 72.3)*
Multi-Purpose Canister (MPC)	The canister that provides the confinement boundary for the used fuel. The MPC is a welded, all-stainless-steel cylindrical structure with a fixed outer diameter, consisting of baseplate, shell, lid, port covers, and closure ring. It can be used for used fuel storage as well as transportation.
Overpack	A device or structure into which a canister is placed. The overpack provides physical and radiological protection for canisters while allowing passive cooling by natural convection or conduction.
Pad	A reinforced concrete basemat on an engineered fill, serving as a foundation for supporting casks. A pad is typically partially embedded and is designed and constructed as foundation under applicable codes such as ACI 318 or ACI 349.
Radiation shielding	Barriers to radiation that are designed to meet the requirements of 10 CFR 72.104(a), 10 CFR 72.106(b), and 10 CFR 72.128(a)(2).
Spent nuclear fuel or spent fuel; Used nuclear fuel or used fuel (the terms “spent fuel” and “used fuel” are interchangeable)	Fuel that has been withdrawn from a nuclear reactor after irradiation, has undergone at least a 1-year decay process since being used as a source of energy in a power reactor, and has not been chemically separated into its constituent elements by reprocessing. Spent or used fuel includes the special nuclear material, byproduct material, source material, and other radioactive materials associated with fuel assemblies. *(10 CFR 72.3)*
Ventilation system	The ventilation system provides passive convection cooling for DCSS. It typically consists of inlet and outlet vents and related components such as vent screens.
Structures, systems, and components (SSCs) important to safety	Those features of the ISFSI and DCSS designs with one of the following functions: (1) to maintain the conditions required to safely store used fuel, high-level radioactive waste, or reactor-related GTCC waste; (2) to prevent damage to the used fuel, high-level radioactive waste, or reactor-related GTCC waste container during handling and storage; or (3) to provide reasonable assurance that used fuel, high-level radioactive waste, or reactor-related GTCC waste can be received, handled, packaged, stored, and retrieved without undue risk to the health and safety of the public. *(10 CFR 72.3)*

II.2 Materials

Table II.2 defines generalized materials that are listed in Chapter V of this report, Application of Time-Limited Aging Analyses and Aging Management Programs.

Table II.2 Selected Definitions and Use of Terms for Describing and Standardizing Materials.

Term	Definition as used in this document
BISCO NS-3	A borated concrete neutron absorber and shielding material encased in the access door in the early design of the NUHOMS system. In the later design of the NUHOMS system, concrete is used as shielding material in the access door.
NS-4-FR	A borated phenolic resin compound used for neutron absorption and shielding material in the NAC International, Inc., cask systems.
BORAL	A hot rolled composite plate material consisting of a core of mixed aluminum and boron carbide particles with an 1100 series aluminum cladding on both external surfaces. The boron carbide contained in BORAL is a fine granulated powder that conforms to ASTM C-750-80 nuclear grade Type III. *(Holtec International 2010)*
Concrete	Normal concrete (or plain concrete) is a composite construction material composed of Portland cement or any other hydraulic cement, fine aggregate such as sand, coarse aggregate made of gravel or crushed rocks such as limestone or granite, and with or without chemical admixtures. Heavyweight concrete (also known as high-density concrete or shielding concrete), the concrete used for radiation shielding, is made by adding heavy natural aggregates such as barites or magnetite. Typically, the density with barites will be about 45% greater than that of normal concrete, while with magnetite the density will be about 60% greater than normal concrete. Reinforced concrete is concrete to which reinforcements (commonly rebars) are added to strengthen the concrete in tension. Concrete is strong in compression but weak in tension.
Elastomers	Flexible materials such as rubber, EPT, EPDM, PTFE, ETFE, Viton, vitril, neoprene, and silicone elastomer. Hardening and loss of strength of elastomers can be induced by elevated temperature above ≈35°C (95°F) and additional aging factors (e.g., exposure to ozone, oxidation, or radiation). *(Gillen and Clough 1981)*
Galvanized steel	Steel coated with zinc, usually by immersion or electrode deposition. The zinc coating protects the underlying steel because the corrosion rate of the zinc coating in dry, clean air is very low. In the presence of moisture, galvanized steel is classified under the category "steel."
Holtite	Holtite is Holtec's version of a polymer-based neutron shield material.
METAMIC	The trade name for an aluminum/boron carbide composite that is a neutron-absorber material qualified for use in the MPCs for the HI-STORM 100 ISFSIs. *(Holtec International 2010)*
Polymer	A polymer is a synthetic organic plastic or elastomeric material used in various components in DCSS primarily for sealing applications.
RX-277	A cement-like neutron shielding material used in the VSC-24 cask system.
Stainless steel	Products grouped under the term "stainless steel" include wrought or forged austenitic, ferritic, or martensitic, precipitation-hardened steel. Examples of stainless steel designations that comprise this category include SA479-Gr. XM-19, SA564-Gr. 630, SA638-Gr. 660, and Types 304, 304LN, 308, 308L, 309, 309L, 316, and LN. *(ASME 2007; Holtec International 2010)*
Steel	In some environments, carbon steel and high-strength low-alloy steel are vulnerable to

Table II.2 Selected Definitions and Use of Terms for Describing and Standardizing Materials.

Term	Definition as used in this document
	general, pitting, and crevice corrosion, even though the rates of aging may vary. Consequently, these metal types are generally grouped under the broad term "steel." Note that this category does not include stainless steel, which has its own category. However, high-strength low-alloy steel with yield strength varying from 105 to 150 kilopounds per square inch is susceptible to SCC. Therefore, when aging effects are being considered, these materials are specifically identified. Examples of designations for steels for bolts and studs include SA193-Gr. B7; SA194 2H; SA354-Gr. BC; SA540-Grs. B21, B23, and B24; and SA574-Grs. 4142 and 51B37M. Examples of designations for steels for other components include SA515-Gr. 70 and SA516-Gr. 70. *(ASME 2007)*

II.3 Environments

Table II.3 defines the standardized environments that are listed in Chapter V of this report, Application of Time-Limited Aging Analyses and Aging Management Programs.

Table II.3 Selected Definitions and Use of Terms for Describing and Standardizing Environments.

Term	Definition as used in this document
Adverse environment	An environment that is hostile to the component material, thereby leading to potential aging effects. An adverse environment can be due to any of the following: high relative humidity, high temperature, salty air, or radiation.
Aggressive environment (steel in concrete)	An aqueous environment that is aggressive with respect to steel embedded in concrete is one with a pH <5.5 or a chloride concentration >500 ppm or sulfate concentration >1500 ppm. *(NUREG-1557)*
Aggressive groundwater/soil	The DCSS concrete pad is typically partially embedded in ground and may be exposed to aggressive groundwater/soil. An aggressive groundwater/soil (i.e., pH <5.5, chloride concentration >500 ppm, or sulfate concentration >1500 ppm) causes degradation of the concrete.
Air – outdoor	The outdoor environment consists of moist, possibly salt-laden atmospheric air, ambient temperatures and humidity, and exposure to weather, including precipitation and wind. In addition, for marine environments, salt-laden air passing through air ducts may deposit salt on the stainless steel confinement components. Because these components are protected by overpack structure, precipitation does not wash away the deposited salt and the salt accumulates. The accumulated salt may cause SCC if high residual stress, humidity, and temperatures conducive to deliquescence are present.
Air, moist	Air with enough moisture to facilitate the loss of material in steel caused by general, pitting, and crevice corrosion. Moist air in the absence of condensation also is potentially aggressive (e.g., under conditions where hygroscopic surface contaminants are present).
Confinement environment	The confinement environment is the environment inside a sealed storage canister or cask. Normally, this environment includes inert (He) and non-aqueous (dry) atmospheres. During the initial storage period, the confinement environment may include some residual moisture, which is consumed gradually with time.
Chloride-rich environment	A chloride-rich environment is one in which soluble chloride compounds are present in sufficient quantity to potentially contribute to chloride-induced stress corrosion cracking of stainless steel components, particularly welded canisters. The chlorides may be introduced through airborne salts resulting from proximity to marine environments, road salting to remove ice and snow, agricultural activity, or other sources. The deposition of these salts on susceptible surfaces and subsequent deliquescence of moisture from the air can lead to conditions conducive to stress corrosion cracking of susceptible material. A marine environment is a specific type of chloride-rich environment present near a large-body of salt water. The environment is characterized by airborne salts (mainly sodium chloride [99.6%] and a small amount of magnesium chloride) in a humid atmosphere. Its pH and relative humidity may quantify the aggressiveness of the environment. The concentration of chlorides in the environment depends on the distance from the salt water source, altitude above water level, prevailing winds and presence or absence of breaking waves. The effect of sheltering on metal corrosion and SCC resistance also plays an important role. Chlorides that accumulate on an exposed surface can be washed away by precipitation. It has been demonstrated that, for some materials, sheltered exposures facilitate higher corrosion rates than

Table II.3 Selected Definitions and Use of Terms for Describing and Standardizing Environments.

Term	Definition as used in this document
	unsheltered exposures in marine environments. With chloride deposits of 20 to 100 mg/m^2 on the surface of Type 304 stainless steel, cracking has been observed at temperatures as low as 35°C (95°F). Magnesium chloride (compared to sodium chloride) plays a major role in causing SCC because its deliquescence point is lower (it forms a chloride solution at lower relative humidity). (*Gustafsson and Franzén 1996; Meira et al. 2006; Caseres and Mintz 2010; Oberson et al. 2013*).

II.4 Aging Effects

Table II.4 defines the standardized aging effects due to associated aging mechanisms that are listed in Chapter V of this report, Application of Time-Limited Aging Analyses and Aging Management Programs.

Table II.4 Selected Use of Terms for Describing and Standardizing Aging Effects

Term	Usage in this document
Concrete cracking and spalling	Cracking and exfoliation of concrete as the result of freeze-thaw, aggressive chemical attack, and reaction with aggregates.
Cracking	Synonymous with the phrase "crack initiation and growth" in metallic materials. Cracking in concrete is caused by restraint shrinkage, creep, settlement, and aggressive environments.
Cracking, loss of bond, and loss of material (spalling, scaling)	Phenomena caused by corrosion of steel embedded in concrete.
Cracks; distortion; increase in component stress level	Phenomena in concrete structures caused by settlement. Although settlement can occur in a soil environment, the symptoms can also be manifested in either an air-indoor uncontrolled or air-outdoor environment.
Cumulative fatigue damage	Damage due to cyclic loading of (1) metallic components as defined by ASME Boiler and Pressure Vessel Code, Section III, Division 1, Subsection NB; (2) concrete structures and components as given in the American Concrete Institute (ACI) Committee Report ACI 215R-74; and (3) other steel support structures as covered under the American Institute of Steel Construction (AISC) Standards ANSI/AISC N690-06 and ANSI/AISC N360-10, Appendix 3.
Elastomer degradation	Elastomer materials are substances whose elastic properties are similar to those of natural rubber. The term elastomer is sometimes used to technically distinguish synthetic rubbers and rubber-like plastics from natural rubber. Degradation may include mechanisms such as cracking, crazing, fatigue breakdown, abrasion, chemical attacks, and weathering. *(Davis 2000, ASTM 2004)*
Expansion and cracking	Phenomena within concrete structures caused by reaction with aggregates.
Hydride-reorientation-induced embrittlement	Hydride reorientation in PWR high-burnup cladding alloys.
Increase in porosity and permeability, cracking, loss of material (spalling, scaling), loss of strength	Phenomena within concrete structures caused by aggressive chemical attack. In concrete, the loss of material (spalling, scaling) and cracking can also result from freeze-thaw processes, and loss of strength can result from leaching of calcium hydroxide from the concrete.
Loss of material	A phenomenon due to general corrosion, pitting corrosion, galvanic corrosion, crevice corrosion, erosion, and aggressive chemical attack. In concrete structures, loss of material can also be caused by abrasion or cavitation or corrosion of embedded steel.
Loss of material, loss of form	In earthen water-control structures, phenomena resulting from erosion, settlement, sedimentation, frost action, waves, currents, surface runoff, and seepage.
Loss of preload	A phenomenon due to stress relaxation and self-loosening (caused by vibration, joint flexing, and thermal cycles). *(EPRI NP-5067, EPRI TR-104213)*

Table II.4 Selected Use of Terms for Describing and Standardizing Aging Effects

Term	Usage in this document
Polymer degradation	The aging effects for polymeric components include loss of sealing capacity due to loss of material, cracking, shrinkage, or hardening from weathering of polyurethane foam elastomer, rubber, and other similar materials due to temperature and radiation as evidenced by crazing, scuffing, cracking, dimensional and color changes, or loss of suppleness.
Reduction in concrete anchor capacity due to local concrete degradation	A phenomenon resulting from service-induced cracking or other concrete aging mechanisms.
Reduction in foundation strength, cracking, differential settlement	Phenomena that can result from erosion of a porous concrete subfoundation.
Reduction of heat transfer	Reduction in the ability to remove thermal energy from a cask or canister that can result from the blockage of air duct screens by blowing debris, animals, etc.
Reduction of neutron-absorbing capacity (or shielding capacity)	Reduction in the ability of a material to absorb neutrons that can result from any of several time-dependent degradation processes involving the loss of the active neutron-absorbing material (B-10, cadmium, gadolinium, etc.).
Reduction of strength and modulus	In concrete, a phenomenon that can be attributed to elevated temperatures [>65.6°C (150°F) general; > 93.3°C (200°F) local].
Wall thinning	A specific type of loss of material attributed in the AMR line items to general corrosion.

II.5 Significant Aging Mechanisms

An aging mechanism is considered significant when it may result in aging effects that produce a loss of integrity and/or functionality of a component or structure during the current or extended license period, if allowed to continue without mitigation. Table II.5 defines the standardized aging mechanisms that are listed in Chapter V of this report, Application of Time-Limited Aging Analyses and Aging Management Programs.

Table II.5 Selected Definitions and Use of Terms for Describing and Standardizing Aging Mechanisms.

Term	Definition as used in this document
Abrasion	As water migrates over a concrete surface, it may transport material that can abrade the concrete. The passage of water also may create a negative pressure at the water/air-to-concrete interface that can result in abrasion and cavitation degradation of the concrete. This damage may result in pitting or aggregate exposure due to loss of cement paste. *(NUMARC 1991a)*
Aggressive chemical attack	Concrete, being highly alkaline (pH >12.5), is degraded by strong acids. Dissolved chlorides and sulfates may attack concrete, depending on their concentrations in soil/groundwater that comes into contact with the concrete. Exposed surfaces of concrete structures may be subject to sulfur-based acid-rain degradation. The minimum thresholds causing concrete degradation are 500 ppm chlorides and 1500 ppm sulfates. *(NUMARC 1991a)*
Alkali-silica reaction (ASR)	Reactions between the hydroxyl ions in the Portland cement pore solution and reactive forms of silica in the aggregates (e.g., chert, quartzite, opal, and strained quartz crystals), known as "alkali-silica reaction" (ASR), can cause serious expansion and cracking in concrete, resulting in major structural problems and sometimes necessitating demolition. Newly constructed and future ISFSI concrete facilities have increased potential for ASR to occur, because current-generation Portland cements have increased alkali contents that may result in reactivity of aggregates that were not reactive in the past, and the availability of good-quality aggregate materials is becoming limited in many areas of the United States.
Corrosion of carbon steel storage overpack components	Corrosion can occur on carbon steel components including overpack shell, lid studs and nuts, baseplate, sector lugs, covers for concrete shielding blocks, etc.
Corrosion of embedded steel	If the pH of concrete in which steel is embedded is reduced below 11.5 by intrusion of aggressive ions (e.g., chlorides at >500 ppm) in the presence of oxygen, the embedded steel may corrode. The leaching of alkaline products through cracks, entry of acidic materials, or carbonation may also cause a reduction in pH. Chlorides may be present in the constituents of the original concrete mix. The properties and types of cement, aggregates, and moisture content affect the severity of the corrosion. *(NUMARC 1991b)*
Deterioration of seals, gaskets, and moisture barriers (caulking, flashing, and other sealants)	Seals, gaskets, and moisture barriers (caulking, flashing, and other sealants) are subject to loss of sealing capacity due to aging degradation of these materials.
Elevated temperature and radiation	Elevated temperature and radiation are listed as an aging mechanism only in the context of concrete structures. In concrete, reduction in strength and modulus can be attributed to elevated temperatures (66°C or 150°F) and/or gamma dose above 10^{10} rad. (*Fillmore 2004*)
Freeze-thaw, frost action	Repeated freezing and thawing can cause severe degradation of concrete, characterized by scaling, cracking, and spalling. The cause is water freezing within the pores of the concrete, creating hydraulic pressure. If unrelieved, this

Table II.5 Selected Definitions and Use of Terms for Describing and Standardizing Aging Mechanisms.

Term	Definition as used in this document
	pressure will lead to freeze-thaw degradation. If the temperature cannot be controlled, other factors that enhance the resistance of concrete to freeze-thaw degradation are (a) adequate air content (i.e., within ranges specified in ACI 301-84), (b) low permeability, (c) protection until adequate strength has developed, and (d) surface coatings applied to frequently wet-dry surfaces. *(NUMARC 1991b)*
Galvanic corrosion	Galvanic corrosion is accelerated corrosion of a metal because of an electrical contact with a more noble metal or nonmetallic conductor in a corrosive electrolyte.
General, pitting, and crevice corrosion	General corrosion, also known as uniform corrosion, proceeds at approximately the same rate over all parts of a metal surface. Loss of material due to general corrosion is an aging effect requiring management for low-alloy steel, carbon steel, and cast iron in outdoor environments. Some potential for pitting and crevice corrosion may exist even when pitting and crevice corrosion are not explicitly listed in the aging effects/aging mechanism column in NUREG-1801, Rev. 2, AMR line items and when the descriptor may only be loss of material due to general corrosion. This is so because the visual inspection required for detecting the effects of general corrosion acts as a de facto screening for pitting and crevice corrosion, since the symptoms of general corrosion will be noticed first.
Hydride reorientation	A phenomenon unique to high-burnup (>45 GWd/MTU) PWR cladding alloys that could result in potential radial hydride embrittlement during vacuum drying/transfer operations and early stage of dry cask storage. (*Billone et al. 2013*)
Leaching of calcium hydroxide and carbonation	Water passing through cracks, inadequately prepared construction joints, or areas that are not sufficiently consolidated during placing may dissolve some calcium-containing products (of which calcium hydroxide is the most readily soluble, depending on the solution pH) in concrete. Once the calcium hydroxide has been leached away, other cementatious constituents become vulnerable to chemical decomposition, finally leaving only the silica and alumina gels behind with little strength. The water's aggressiveness in the leaching of calcium hydroxide depends on its salt content, pH, and temperature. This leaching action is effective only if the water passes through the concrete. *(NUMARC 1991b)*
Microbiologically induced corrosion	Any of the various forms of corrosion influenced by the presence and activities of such microorganisms as bacteria, fungi, and algae, and/or the products produced in their metabolism. Degradation of material that is accelerated due to conditions under a biofilm or microfouling tubercle, for example, anaerobic bacteria that can set up an electrochemical galvanic reaction or inactivate a passive protective film, or acid-producing bacterial that might produce corrosive metabolites.
Reaction with aggregates	The presence of reactive alkalis in concrete can lead to subsequent reactions with aggregates that may be present. These alkalis are introduced mainly by cement, but also may come from admixtures, salt contamination, seawater penetration, or solutions of deicing salts. These reactions include alkali-silica reactions, cement-aggregate reactions, and aggregate-carbonate reactions. These reactions may lead to expansion and cracking. *(ACI 1982, NUREG-1557)*
Settlement	Settlement of basemat (pad) and approach slab (ramp) may be due to erosion

Table II.5 Selected Definitions and Use of Terms for Describing and Standardizing Aging Mechanisms.

Term	Definition as used in this document
	or changes in the site conditions (e.g., water table). The amount of settlement depends on the foundation materials. *(Gavrilas et al. 2000)*
Stress corrosion cracking (SCC)	The cracking of a metal produced by the combined action of corrosion and tensile stress (applied or residual), especially at elevated temperature. SCC is highly chemically specific in that certain alloys are likely to undergo SCC only when exposed to certain types of chemical environments. SCC may be intergranular or transgranular, and may occur at a temperature as low as 35°C. (*Oberson et al., 2013*)
Thermal effects, gasket creep, and self-loosening	Loss of preload due to gasket creep, thermal effects (including differential expansion and creep or stress relaxation), and self-loosening (which may be due to vibration, joint flexing, cyclic shear loads, or thermal cycles). *(Bickford 1995)*
Thermal fatigue	The progressive and localized structural damage that occurs when a material is subjected to cyclic loading associated with thermal cycling. The maximum stress values are less than the ultimate tensile stress limit, and may be below the yield stress limit of the material. Higher temperatures generally decrease fatigue strength. Thermal fatigue can result from variations in ambient temperature, increase in temperature due to reduction in heat transfer capability, and differential thermal expansion of the adjacent components.
Weathering	The mechanical or chemical degradation of external surfaces of concrete and polymeric materials when exposed to an outside environment.
Wind-induced abrasion	Abrasion that occurs when the fluid carrier of abrading particles is wind rather than water/liquids. (See “abrasion.”)

Page intentionally blank

II.6 References

10 CFR 72.3, Definitions, Nuclear Regulatory Commission, 1-1-12 Edition 2012.

ACI 201.2R 77 Guide to Durable Concrete, American Concrete Institute, Detroit, MI, Reapproved 1982.

ACI 215R-74, Considerations for Design of Concrete Structures Subjected to Fatigue Loading, American Concrete Institute, Farmington Hills, MI, December 1992.

ACI 301-84, Specifications for Structural Concrete for Buildings, American Concrete Institute, Detroit, MI, Revised 1988.

ANSI/AISC N360-10, Specification for Structural Steel Buildings, American Institute of Steel Construction, Chicago, IL, June 22, 2010.

ANSI/AISC N690-06, Specification for Safety-Related Steel Structures for Nuclear Facilities, American Institute of Steel Construction, Chicago, IL, 2007.

ASME Boiler and Pressure Vessel Code, Section III, Rules for Construction of Nuclear Power Plant Components, Division 1, Subsection NB, Class 1 Components, American Society of Mechanical Engineers, New York, 2004.

ASME Boiler and Pressure Vessel Code, Section II: Part A, Ferrous Material Specifications, 2007.

ASTM, 2004 Annual Book of ASTM Standards, Volume 09.01, ASTM International, 2004.

Bickford, J.H., An Introduction to the Design and Behavior of Bolted Joints, 3rd Edition, Marcel Dekker, New York, 1995.

Billone M.C., Burtseva, T.A., and Einziger, R.E., Ductile-to-Brittle Transition Temperature for High-Burnup Cladding Alloys Exposed to Simulated Drying-Storage Conditions, J. Nucl. Mater. 433: 431–448 (2013).

Caseres, L. and Mintz, T.S., Atmospheric Stress Corrosion Cracking Susceptibility of Welded and Unwelded 304, 304L, and 316L Austenitic Stainless Steels Commonly Used for Dry Cask Storage Containers Exposed to Marine Environments, NUREG/CR-7030, Southwest Research Institute, San Antonio, TX, October 2010.

Davis, J.R. (Editor) "Corrosion," ASM International, Materials Park, OH, 2000.

EPRI NP-5067, Good Bolting Practices, A Reference Manual for Nuclear Power Plant Maintenance Personnel, Volume 1: Large Bolt Manual, 1987; Volume 2: Small Bolts and Threaded Fasteners, Electric Power Research Institute, Palo Alto, CA, 1990.

EPRI TR-104213, Bolted Joint Maintenance & Application Guide, Electric Power Research Institute, Palo Alto, CA, December 1995.

Fillmore, D. L., Literature Review of the Effects of Radiation and Temperature on the Aging of Concrete, INEEL/EXT-04-02319, Sept. 2004.

Gavrilas, M.P., Hejzlar, P., Todreas, N.E., Shatilla, Y., Safety Features of Operating Light Water Reactors of Western Design, MIT Center for Advanced Nuclear Energy Systems, Cambridge, MA, 2000.

Gillen, K.T. and Clough, R.L., Occurrence and Implications of Radiation Dose-Rate Effects for Material Aging Studies, Rad. Phys. Chem. 18(3-4): 679-687 (1981).

Gustafsson, M.E.R. and Franzén, L.G., Dry Deposition and Concentration of Marine Aerosols in a Coastal Area, SW Sweden, Atmospheric Environ. 30: 977-989 (1996).

Holtec International, Final Safety Analysis Report for the HI-STORM 100 Cask System, Revision 8, Chapter 1: General Description, Holtec International, Marlton, NJ, 2010.

Meira, G.R., et al., Measurements and Modeling of Marine Salt Transportation and Deposition in a Tropical Region in Brazil, Atmospheric Environ. 40: 5596-5607 (2006).

NUMARC, Class 1 Structures License Renewal Industry Report, NUMARC Report 90-06, Revision 1, Nuclear Utility Management and Resources Council, Washington DC, 1991a (TR-103835).

NUMARC, Pressurized Water Reactors Containment Structures License Renewal Industry Report, NUMARC Report 90-01, Revision 1, Nuclear Utility Management and Resources Council, Washington DC, 1991b (TR-103842).

NUREG-1557, Summary of Technical Information and Agreements from Nuclear Management and Resources Council Industry Reports Addressing License Renewal, Nuclear Regulatory Commission, Washington, DC, 1996. Available at http://www.osti.gov/scitech/biblio/392805.

NUREG-1571, Information Handbook on Independent Spent Fuel Storage Installations, Nuclear Regulatory Commission, Washington, DC, 1995.

NUREG-1801, Generic Aging Lessons Learned (GALL) Report, Rev. 2, Nuclear Regulatory Commission, Washington, DC, December 2010.

Oberson, G., D. Dunn, T. Mintz, X. He, R. Pabalan and L. Miller, "US NRC-Sponsored Research on Stress Corrosion Cracking Susceptibility of Dry Storage Canister Materials in Marine Environments," Paper 13344 presented at the 39th Annual Waste Management WM2013 Conference, Phoenix, AZ, February 24–28, 2013 (available at pbadupws.nrc.gov/docs/ML1302/ML13029A490.pdf, accessed March 14, 2013).

III. TIME-LIMITED AGING ANALYSES

The Standard Review Plan, NUREG-1927, contains guidance for renewal of licenses and Certificates of Compliance (CoCs) for Independent Spent Fuel Storage Installations (ISFSIs) and dry cask storage system (DCSS) for a term not to exceed 40 years. Both the license and the CoC renewal applications must contain updated technical requirements and operating conditions (fuel storage, surveillance and maintenance, and other requirements) for the ISFSI and DCSS that address aging effects that could affect the safe storage of the used fuel. The conditions for spent fuel storage cask renewal are described in 10 CFR 72.240. Subsection 72.240 states, "The application must be accompanied by a safety analysis report (SAR). The SAR must include the following:

(1) Design bases information as documented in the most recently updated final safety analysis report (FSAR) as required by § 72.248;
(2) Time-limited aging analyses that demonstrate that structures, systems, and components important to safety will continue to perform their intended function for the requested period of extended operation; and
(3) A description of the AMP for management of issues associated with aging that could adversely affect structures, systems, and components important to safety."

Section 3.5 of NUREG-1927, "Standard Review Plan for Renewal of Spent Fuel Dry Cask Storage System Licenses and Certificates of Compliance," defines a TLAA as a process to assess SSCs that have a time-dependent operating life. Time dependency may relate to fatigue life (number of cycles to predicted failure), or time-limited design life (number of operating hours until replacement), or time-dependent degradation of mechanical properties of the material (aging effects). Pursuant to the definition of TLAAs in 10 CFR 72.3, TLAAs are those licensee or certificate holder calculations and analyses that:

(i) Involve SSCs important to safety within the scope of the license renewal, as determined in subpart L of this part, or within the scope of the spent fuel storage certificate renewal, as delineated in subpart F of this part, respectively;
(ii) Consider the effects of aging;
(iii) Involve time-limited assumptions defined by the current operating term, for example, 40 years;
(iv) Were determined to be relevant by the licensee or certificate holder in making a safety determination;
(v) Involve conclusions or provide the basis for conclusions related to the capability of SSCs to perform their intended safety functions; and
(vi) Are contained or incorporated by reference in the design bases.

Thus, TLAAs are revalidation of existing calculations or analyses in the design bases of an ISFSI or DCSS. As stated in NUREG-1927 Section 1.4.4, a license or CoC renewal request should not include any changes to the current licensing basis. Pursuant to 10 CFR 72.56, changes to the licensing basis must be requested through a separate license or CoC amendment process. Examples of possible TLAAs are (1) time-dependent degradation of neutron-absorbing material or radiation shielding material, (2) reduction in strength of concrete structures as a function of total radiation dose or due to exposures to elevated temperatures, and (3) thermal fatigue of canister shells or concrete structures. Other time-dependent analyses that are considered significant for aging management of SSCs important to safety, but are not included in the current licensing basis, need to be perform as part of the aging management review to demonstrate that the aging effects on these SSCs are

adequately managed during the term of license renewal. These new analyses should be incorporated in the updated final safety analysis report (FSAR) in accordance with 10 CFR 72.70(b) and (c). Examples of such analyses include stress corrosion cracking (SCC) of canister welds in a marine environment, or embrittlement of high-burnup cladding alloys due to hydride reorientation. These analyses may need to be considered as TLAAs in subsequent license renewals. However, the time dependence of susceptibility to SCC of SS canister welds is at present, not well established. Additional data are required to develop reliable expressions to perform TLAA and determine the SCC susceptibility of SS canister welds.

The information contained in the license and CoC renewal applications is then reviewed to verify that the aging effects on the SSCs in ISFSIs or DCSSs are adequately managed for the requested period of extended operation. Subsequent sub-sections of this chapter describe generic TLAAs that have been developed for managing aging effects on the SSCs that are important to safety in the DCSS designs described in Chapter V.

III.1 Identification of Time-Limited Aging Analyses

Analogous to the requirements of 10 CFR 54.21(c) for the renewal of operating licenses for nuclear power plants, NUREG-1927 states that the applicant for an ISFSI license or DCSS CoC renewal is required to evaluate TLAAs. Section 3.5.1 of NUREG-1927 provides brief guidance on the identification of TLAAs.

III.1.1 Description of the Time-Limited Aging Analyses

Management of aging effects for license renewal must demonstrate that the existing licensing basis remains valid and the intended functions of the SSCs important to safety are maintained during the requested period of extended operation. Therefore, the design basis documents should be reviewed to identify TLAAs, including time-dependent degradation of mechanical properties of materials due to aging effects. The impact of such degradation on the design basis or on the design margins should also be evaluated to demonstrate that the existing licensing basis remains valid and the intended functions of the SSCs important to safety are maintained during the requested period of extended operation. The applicant should ensure that the license renewal application does not omit any TLAAs. The license renewal application should also include a list of site-specific exemptions granted in accordance with 10 CFR 72.7 that are based on TLAAs.

Pursuant to 10 CFR 72.24, a license renewal application to store used fuel in an ISFSI must include the design criteria for the proposed storage installation, which establish the design, fabrication, construction, testing, maintenance, and performance requirements of SSCs important to safety as defined in 10 CFR 72.3. In addition, Subpart F, “General Design Criteria,” of 10 CFR 72 includes the following subsections that may be important in the identification of TLAAs:

10 CFR 72.120(d) *General consideration*: The ISFSI or MRS must be designed, made of materials, and constructed to ensure that there will be no significant chemical, galvanic, or other reactions between or among the storage system components, spent fuel, reactor-related GTCC waste, and/or high level waste including possible reaction with water during wet loading and unloading operations or during storage in a water-pool type ISFSI or MRS. The behavior of materials under irradiation and thermal conditions must be taken into account.

10 CFR 72.122(b) *Protection against environmental conditions and natural phenomena*: SSCs important to safety must be designed to withstand the effects of natural phenomena such as earthquakes, tornadoes, lightning, hurricanes, floods, tsunamis, and seiches without impairing their capability to perform safety functions.

10 CFR 72.122(f) *Testing and maintenance of systems and components*: Systems and components that are important to safety must be designed to permit inspection, maintenance, and testing.

10 CFR 72.122(h) *Confinement barriers and systems*: The monitoring period must be based upon the used-fuel storage cask design requirements.

10 CFR 72.124(b) *Method of criticality control*: When practicable, the design of an ISFSI must be based on favorable geometry, permanently fixed neutron-absorbing materials (poisons), or both. Where solid neutron-absorbing materials are used, the design must provide for positive means of verifying their continued efficacy. For dry used-fuel storage systems, the continued efficacy may be confirmed by a demonstration or analysis before use, showing that significant degradation of the neutron-absorbing materials cannot occur over the life of the facility.

10 CFR 72.128(a) *Criteria for used-fuel and high-level radioactive-waste storage and handling system*: Used-fuel storage must be designed to ensure adequate safety under normal and accident conditions. These systems must be designed with (1) a capability to test and monitor components important to safety, (2) suitable shielding for radioactivity protection under normal and accident conditions, (3) confinement structures and systems, (4) a heat-removal capability having testability and reliability consistent with its importance to safety, and (5) means to minimize the quantity of radioactive wastes generated.

III.1.1.1 Acceptance Criteria

By definition, TLAAs are aging analyses of important-to-safety SSCs within the scope of the license renewal, and are in the design bases of an ISFSI or DCSS. The acceptance criteria for the TLAAs delineate acceptable methods for meeting the requirements in 10 CFR 72. For existing or newly identified SSCs with a time-dependent operating life, the identification of TLAAs should verify that the TLAAs meet the following five criteria listed in Section 3.5.1 of NUREG-1927:

(1) The TLAA should involve time-limited assumptions defined by the current operating term (e.g., 20 years). The defined operating term should be explicit in the analyses. Simply asserting that the SSC is designed for a service life or ISFSI life is not sufficient. Calculations, analyses, or testing that explicitly includes a time limit should support the assertions.

(2) The TLAA should already be contained or incorporated by reference in the design documents. Such documentation includes the (i) Safety Analysis Report (SAR), (ii) Safety Evaluation Report (SER), (iii) technical specifications, (iv) correspondence to and from NRC, (v) Quality Assurance (QA) plan, and (vi) topical reports included as references in the SAR.

(3) The TLAA must address SSCs that are within the scope of license renewal and have a predetermined lifespan.

(4) The TLAA must consider the extended operational lifetime of any SSC materials that have a defined lifetime limit (e.g., due to thermal fatigue condition).

(5) The TLAA should provide conclusions or a basis for conclusions regarding the capability of the SSC to perform its intended function through the license period of extended operation. The TLAA must show either one of the following:

(i) The analyses have been projected to the end of the period of extended operation, or

(ii) The effects of aging on the intended function(s) of the SSC will be adequately managed for the period of extended operation. Component replacement is an acceptable option for managing the TLAA.

III.1.2 Dispositioning the Time-Limited Aging Analyses

The licensee should provide a justification and basis for addressing each SSC that has a predetermined lifespan or is subject to time-dependent aging degradation and is determined to be within the scope of renewal. Information regarding the licensee's methodology used for identifying TLAAs may be helpful in evaluating analyses that meet the five criteria discussed below.

(1) *Have a time-limited assumption defined by the current operating term (e.g., 20 years)*. The defined operating term should be explicit in the analyses. The assertion that the SSC is designed for a specific service life should be supported by a calculation, analysis, or testing that explicitly includes a time limit. The TLAA must consider the extended operational lifetime of any SSC materials that have a defined lifetime limit (e.g., due to thermal fatigue condition).

(2) *Are contained or incorporated by reference in the design documents*. The design documents include the technical specifications in accordance with the requirements of 10 CFR 72.44 and a summary statement of the justification for these technical specifications (as defined in 10 CFR 72.26), or the licensee commitments documented in the site-specific documents contained or incorporated by reference in the design basis analyses, including but not limited to the material license, FSAR, docketed licensing correspondence, NRC SERs, hazard analyses, the QA plans, vendor topical reports incorporated by references in the FSAR, and other NRC communications.

(3) *Address SSCs that are within the scope of license renewal and have a predetermined life span*. Chapter 2 of NUREG-1927, concerning renewal of ISFSI licenses and DCSS CoCs, provides the regulatory requirements and guidance on the scoping and screening methodology for the inclusion of SSCs in the renewal process.

(4) *Consider the extended operational lifetime of any SSC materials that have a defined lifetime limit*. The analyses involve conclusions or provide the basis for conclusions related to the license renewal process. The effects of aging degradation should be incorporated in these analyses. These effects include but are not limited to loss of material, change in dimension, change in material properties, loss of toughness, loss of pre-stress, settlement, cracking, and loss of dielectric properties. Analyses that do not address the intended function of the SSCs are not considered TLAAs.

(5) *Provide conclusions or a basis for conclusions regarding the capability of the SSC to perform its intended function through the license period of extended operation*. An analysis is considered relevant if it can be shown to have a direct bearing on the action taken because of the analysis. Such analyses would have provided the basis for the applicant's initial safety determination, and without these analyses the applicant may have reached a different safety conclusion.

However, TLAAs that need to be included in the renewal application are not necessarily limited to those that have been previously reviewed and approved by the NRC. The following examples illustrate TLAAs that may need to be addressed but which were not previously reviewed and approved by the NRC:

- The FSAR states that the design complies with a certain national code and standard. A review of the code and standard reveals that it calls for an analysis or calculation. Some of these calculations or analyses will be TLAAs. The applicant performed the actual calculation to meet the code and standard, but the specific calculation was not referenced in the FSAR and the NRC has not reviewed the calculation. In addition, some of these TLAAs may not have been relevant for the original licensing period but may be significant for the requested period of extended operation.
- In response to a NRC generic letter, a licensee submitted a letter to the NRC committing to perform a TLAA that would address the concern in the generic letter. The NRC has not documented a review of the applicant's response and has not reviewed the actual analysis.

The following examples illustrate potential TLAAs that are not TLAAs and need not be addressed:

- Analyses with a time-limited assumption less than the current license period of the ISFSI: For example, an analysis of a component based on a service life that would not reach the end of the current license period.
- Analyses that do not involve aging effects. For example, wind speed of 100 mph is expected to occur once every 50 years.

For any analyses that are not identified as TLAAs, the applicant should verify that they do not meet at least one of the five acceptance criteria described in Subsection III.1.1.1.

III.1.3 Final Safety Analysis Report Supplement

The specific criterion for meeting the guidance of NUREG-1927, Section 1.4.4, is that the renewal applications for IFSFI licenses and DCSS CoCs should contain additional information related to the updated FSAR and changes or additions to technical specifications. If the TLAAs have been dispositioned in accordance with NUREG-1927, Section 3.5.1, option 5(ii), the FSAR supplement should include an adequate description of the proposed AMP to manage the aging effects on the intended function of the SSCs during the requested period of extended operation. It should also state that the results of this activity are evaluated relative to the applicable codes, standards, and guidelines. The description should contain sufficient information associated with the TLAAs regarding the basis for determining that the applicant has followed the guidance of NUREG-1927, Sections 1.4.4 and 3.5.1.

The license renewal process requires the applicant to update its FSAR to include this FSAR supplement at the next update required pursuant to 10 CFR 72.70. As part of the license condition, until the FSAR update is complete, the applicant may make changes to the programs described in its FSAR supplement without prior NRC approval, provided that the applicant evaluates each such change pursuant to the criteria set forth in 10 CFR 72.48. If the applicant updates the FSAR to include the FSAR supplement before the license is renewed, no condition will be necessary because they have been incorporated in the updated FSAR and its supplement. However, the applicant

should identify and commit in the license renewal application to any future AMAs, including enhancements and commitments to be completed before the requested period of extended operation begins. The license renewal applicant should commit to completing these activities no later than this specified date, i.e., prior to entering the requested period of extended operation.

The number and type of TLAAs vary depending on the site-specific design basis for the ISFSI or DCSS. All five criteria described in Subsection III.1.2 must be satisfied to conclude that a calculation or analysis is a TLAA. Table III.1 provides examples of how the five criteria may be applied. Table III.2 provides a list of generic TLAAs that may be included in a license application. Table III.3 provides a list of other potential site-specific TLAAs. It is not expected that all license renewal applications would identify all TLAAs in these tables for their facilities. In addition, an applicant may perform specific TLAAs for its facility that are not shown in these tables.

Sections III.2 to III.5 describe typical TLAAs for managing aging effects in used-fuel dry storage facilities. Section III.7 describes other site-specific TLAAs.

Table III.1 Sample Process for Identifying Potential TLAAs and Basis for Disposition.

Example	Disposition
Maximum wind speed of 100 mph is expected to occur once per 50 years.	Not a TLAA because it does not involve an aging effect.
The applicant states that the spacer plate welded to the gamma shielding cross plate in the air inlet of the HI-STORM storage system is certified by the vendor to last for 40 years.	This component was not credited in any safety evaluation, and therefore the analysis is not considered a TLAA. It does not meet criterion (4) of the TLAA definition in Subsection III.1.2.
Fatigue analyses for the used-fuel canister shell, performed in accordance with the criteria in ASME Section III, NB-3222.4, showed that no consideration of fatigue is required for the 50-year service life.	This is a TLAA because it meets all five criteria defined in Subsection III.1.2. The applicant's fatigue design basis relies on assumptions defined by the 50-year service life for this component.
The integrated fluence is estimated for the 60-year service life of the shielding material in horizontal storage module doors.	This is a TLAA because it meets all five criteria defined in Subsection III.1.2. The design basis for the use of the shielding material is currently limited to 60 years, and needs to be reanalyzed for the period of extended operation beyond 60 years.

Table III.2 Examples of Generic TLAAs

Fatigue of Metal and Concrete Structures and Components (Subsection III.2)
Corrosion Analysis of Metal Components (Subsection III.3)
Time-dependent degradation of neutron-absorbing materials (Subsection III.4)
Time-dependent degradation of radiation-shielding materials (Subsection III.5)

Table III.3 Example of Potential Site-Specific TLAA

Flaw growth analyses that demonstrate structure stability for extended service.

III.1.4 References

10 CFR 54.21, Requirements for Renewal of Operating Licenses For Nuclear Power Plant: Contents of Application—Technical Information, Nuclear Regulatory Commission, 1-1-12 Edition, 2012.

10 CFR 72.3, Definitions, Nuclear Regulatory Commission, 1-1-12 Edition, 2012.

10 CFR 72.24, Contents of Application: Technical Information, Nuclear Regulatory Commission, 1-1-12 Edition, 2012.

10 CFR 72.7, Specific Exemptions, Nuclear Regulatory Commission, 1-1-12 Edition, 2012.

10 CFR 72.26, Contents of Application: Technical Specifications, Nuclear Regulatory Commission, 1-1-12 Edition, 2012.

10 CFR 72.44, License Conditions, Nuclear Regulatory Commission, 1-1-12 Edition, 2012.

10 CFR 72.48, Changes, Tests, and Experiments, Nuclear Regulatory Commission, 1-1-12 Edition, 2012.

10 CFR 72.70, Safety Analysis Report Updating, Nuclear Regulatory Commission, 1-1-12 Edition, 2012.

10 CFR 72.120, General Considerations, Nuclear Regulatory Commission, 1-1-12 Edition, 2012.

10 CFR 72.122, Overall Requirements, Nuclear Regulatory Commission, 1-1-12 Edition, 2012.

10 CFR 72.124, Criteria for Nuclear Criticality Safety, Nuclear Regulatory Commission, 1-1-12 Edition, 2012.

10 CFR 72.128, Criteria for Spent Fuel, High-Level Radioactive Waste, and Other Radioactive Waste Storage and Handling, Nuclear Regulatory Commission, 1-1-12 Edition, 2012.

ASME Boiler and Pressure Vessel Code, Section III, Rules for Construction of Nuclear Power Plant Components, Division 1, Subsection NB, Class 1 Components, American Society of Mechanical Engineers, New York, 2004.

NUREG-1927, Standard Review Plan for Renewal of Spent Fuel Dry Cask Storage System Licenses and Certificates of Compliance—Final Report, Nuclear Regulatory Commission, Washington, DC, March 2011.

Page intentionally blank

III.2 Fatigue of Metal and Concrete Structures and Components

III.2.1 Description of the Time-Limited Aging Analysis

Metal and concrete structures and components in Independent Spent Fuel Storage Installations (ISFSIs) and dry cask storage systems (DCSSs) are subject to degradation and failure due to fatigue under cyclic loading conditions, such as may occur under temperature and/or pressure cycling or vibrational loading. Such failures can occur at stress amplitudes significantly below the design static loads. Fatigue in metals typically occurs through a process of crack initiation and subsequent growth through the thickness of the affected component. Reinforced concrete, when subject to repeated loads, may exhibit excessive cracking and may eventually fail after a sufficient number of cycles at load levels less than the static strength of the material. The fatigue analysis of ISFSI and DCSS metallic casks and canisters is covered in ASME Boiler and Pressure Vessel Code Section III, Division 1, Subsection NB; guidance on the design of concrete structures and components is given in the American Concrete Institute (ACI) Committee Report ACI 215R-74; and the fatigue of other steel support structures is covered under the American Institute of Steel Construction (AISC) Standards ANSI/AISC N690-06 and ANSI/AISC 360-10, Appendix 3. The ASME is currently preparing a Section III, Division 3 Code for dry cask transportation and storage systems that includes Subsections WA-general, WB-transportation casks, WC-storage casks, and WD-cask internals.

The ASME Code Section III, Division 1, Subsection NB-3200 requires a fatigue analysis for all Class 1 components unless exempted by the Code under applicable Section III provisions. This analysis considers all cyclic loads based on the anticipated number of loading cycles, and includes calculation of the parameter “cumulative usage factor” (CUF), which is used for estimating the extent of fatigue damage in the component. The ASME Code limits the CUF to a value of less than or equal to one for acceptable fatigue design. A CUF below a value of one provides reasonable assurance that no crack has been formed. A CUF greater than one allows for the possibility that a crack may form, and that if left unmitigated, the crack could propagate under fatigue loading and eventually result in component leakage or structural failure. In cases where fatigue of metallic components has been evaluated on the basis of an assumed number of load cycles, the validity of this analysis must be reviewed for the requested period of extended operation. Similarly, potential flaw growth and fracture mechanics analyses (flaw tolerance analyses) that were included in the original design basis analyses or were needed during the license renewal review to manage the aging effects are evaluated to ensure that they remain valid during the requested period of extended operation.

The fatigue strength of concrete is defined as a fraction of the static strength that it can support repeatedly for a given number of cycles. The curves of fatigue stress vs. cycles (S-N) for concrete represent average behavior (i.e., 50% probability of failure), and are approximately linear between 10^2 and 10^7 cycles. However, the design curve may be based on a lower probability of failure. These curves indicate that concrete does not exhibit an endurance limit up to 10 million cycles. For a life of 10 million cycles of compressive, tensile, or flexure loading, the fatigue strength of concrete is about 55% of its static strength. The ACI Committee Report ACI 215R-74 provides background information and general guidance on the design of concrete structures and components for fatigue. The information is presented in the form of diagrams and algebraic relationships that can be used for design. Typically, for a zero minimum stress level (i.e., a load ratio R = 0), the maximum stress level the concrete can support for one million cycles without failure is taken conservatively as 50% of the static load. The maximum allowable stress increases with increasing load ratio. The effects of different values of maximum stress are estimated from constant-stress fatigue tests using Miner’s

Rule (i.e., $\sum(n_r/N_r) = 1$, where n_r is the number of applied stress cycles, and N_r is the number of cycles that will cause failure at that same stress). In addition, the effects of loading rate and hold periods have little effect on fatigue strength.

The AISC Standard ANSI/AISC N690-06 addresses the design, fabrication, and erection of safety-related steel structures for nuclear facilities. This standard is an extension of ANSI/AISC 360-10, which addresses the same topics for structural steel buildings in general. In particular, the guidance for fatigue design in ANSI/AISC N690-06 refers directly to Appendix 3, "Design for Fatigue," of ANSI/AISC 360-10. This appendix specifically applies to structural steel members and connections subject to high-cycle fatigue stresses within the elastic range but of sufficient magnitude to initiate potential cracking and progressive fatigue failure. Guidance is provided on calculating the maximum allowable stress range under cyclic loading conditions for steel structural elements away from and adjacent to welds, mechanically fastened joints, and welded joints of various geometries. Fabrication guidelines for reducing the susceptibility of fabricated steel structures to fatigue are given in the accompanying "Commentary on the Specification for Structural Steel Buildings," Appendix 3 of ANSI/AISC 360-10.

To ensure that fatigue or flaw growth/tolerance evaluations are valid for the requested period of extended operation, the fatigue analyses should include the following:

1. CUF calculations for ASME Code Class 1 components designed to ASME Section III requirements or to other codes that are based on a CUF calculation.

2. Maximum stress range values and associated numbers of loading cycles, as well as fabrication procedures and techniques employed to reduce susceptibility to fatigue failure for concrete components designed in accordance with the general guidance given in ACI 215R-74.

3. Maximum stress range values and associated numbers of loading cycles, as well as fabrication procedures and techniques employed to reduce susceptibility to fatigue failure for other steel support structures designed in conformance with Appendix 3 of ANSI/AISC 360-10.

III.2.2 Dispositioning the Time-Limited Aging Analysis

The acceptance criteria for the TLAAs associated with fatigue of metal and concrete structures and components should delineate acceptable methods by following the U.S. Nuclear Regulatory Commission's guidelines stated in NUREG-1927, Section 3.5.1(5), and listed in Subsection III.1.2.

III.2.2.1 ASME Section III Design

For components designed or analyzed to ASME Code Section III requirements for Class I components or other codes that require a CUF calculation, the acceptance criteria depend upon the choice of the criteria in NUREG-1927, Section 3.5.1(5):

> The TLAA should provide conclusions or a basis for conclusions regarding the capability of the SSC to perform its intended function through the license period of extended operation. The TLAA must show either one of the following:

(i) The analyses have been projected to the end of the period of extended operation, or

(ii) The effects of aging on the intended function(s) of the SSC will be adequately managed for the period of extended operation. Component replacement is an acceptable option for managing the TLAA.

For option (i), the analyses are projected to the end of the requested period of extended operation. This is achieved by either (a) demonstrating that the existing CUF calculations would remain valid for the requested period of extended operation because the actual number of accumulated cycles would not exceed the design basis cycles used in the original analysis, or (b) updating the CUF calculations by projecting the cumulative number of design basis cycles through the requested period of extended operation, and ensuring the resultant CUF values do not exceed the design limit of 1.0.

For option (ii), a site-specific AMP should be developed to ensure that the effects of cumulative fatigue damage of the SSCs will be adequately managed during the requested period of extended operation. Monitoring and tracking the number of fatigue cycles for the fatigue-sensitive locations and components is an acceptable AMP. Fatigue cycles may be incurred, for example, through thermal cycling of used fuel storage canisters or concrete overpack structures. An AMP for managing TLAAs has been developed for the license renewal of nuclear power plants and is described in the GALL Report NUREG-1801, Rev. 2, Section X.M1 ("Fatigue Monitoring").

Although the GALL AMP Section X.M1 does not endorse a program on a generic basis that allows for ASME Section XI inspections in lieu of meeting the fatigue usage criterion, such an approach may be acceptable for managing potential effects of fatigue damage for DCSSs. If future inspections or examinations are to be used as option 3.5.1(5)(ii), then the adequacy of the program must be demonstrated by identifying the fatigue-sensitive locations and their accessibility for inspection, and by defining an acceptable inspection interval. Alternatively, as stated in NUREG-1927, Section 3.5, the component can be replaced and the allowable stresses for the replacement will be as specified by the applicable codes during the requested period of extended operation.

III.2.2.2 Design of Concrete Structures—ACI-215

For concrete structures and components designed in accordance with the guidance provided in ACI 215R-74, one may either choose option (i) and project the analyses to the end of the requested period of extended operation, or choose option (ii) and develop a site-specific AMP to ensure that the effects of cumulative fatigue damage on the intended safety functions of the concrete structures will be adequately managed during the requested period of extended operation. Under option (i), one needs to demonstrate that (a) the current fatigue TLAA remains valid because the severity (i.e., maximum stress) and the number of design cycles will not be exceeded during the requested period of extended operation, or (b) if either one of these is exceeded, the new set of maximum stress values and the corresponding allowable number of cycles are reevaluated to ensure that the design basis value remains acceptable during the requested period of extended operation.

Under option (ii), the licensee needs to (a) develop an AMP that monitors and tracks the severity and number of load cycles to ensure that they remain below the design limit during the requested period of extended operation, or (b) if the AMP includes future inspections or examinations to manage potential effects of fatigue damage, the adequacy of the program must be demonstrated. For the latter option, one should identify the fatigue-sensitive locations and their accessibility for

inspection, and demonstrate the adequacy of the sample size of the DCSSs that will be inspected during the requested period of extended operation as well as the adequacy of the inspection interval.

III.2.2.3 ANSI/AISC N690 and ANSI/AISC 360 Design

For other steel support structures designed to ANSI/AISC N690-06 and ANSI/AISC 360-10 Appendix 3 standards, since the analyses in these standards apply only to high-cycle fatigue loading stresses within the elastic range, under option (i) the licensee needs to demonstrate that the structures in question (a) have not been and will not be subjected to loading in excess of the elastic limit during the requested period of extended operation, and (b) have not been subject to aging degradation processes, such as loss of material due to corrosion and wear or SCC, that could degrade their structural integrity. If either of these recommendations cannot be met, a site-specific AMP for managing this fatigue TLAA should be developed to ensure that the effects of aging degradation on the intended function(s) of the structures and components will be adequately managed for the requested period of extended operation.

III.2.3 Final Safety Analysis Report Supplement

Information should be included in the FSAR supplement that provides a summary description of the evaluation of the TLAA on fatigue of metal and concrete structures and components. Additional information is given in Subsection III.1.3.

III.2.4 References

ACI 215R-74, Considerations for Design of Concrete Structures Subjected to Fatigue Loading, American Concrete Institute, Farmington Hills, MI, December 1992.

ANSI/AISC 360-10, Specification for Structural Steel Buildings, American Institute of Steel Construction, Chicago, IL, June 22, 2010.

ANSI/AISC N690-06, Specification for Safety-Related Steel Structures for Nuclear Facilities, American Institute of Steel Construction, Chicago, IL, 2007.

ASME Boiler and Pressure Vessel Code, Section III, Rules for Construction of Nuclear Power Plant Components, Division 1, Subsection NB, Class 1 Components, American Society of Mechanical Engineers, New York, 2004.

NUREG-1801, Generic Aging Lessons Learned (GALL) Report, Revision 2, Nuclear Regulatory Commission, Washington, DC, December 2010.

NUREG-1927, Standard Review Plan for Renewal of Spent Fuel Dry Cask Storage System Licenses and Certificates of Compliance—Final Report, Nuclear Regulatory Commission, Washington, DC, March 2011.

III.3 Corrosion Analysis of Metal Components

III.3.1 Description of the Time-Limited Aging Analysis

Table III.2 of this report lists corrosion analysis of metal components (or metal corrosion allowance) as a generic time-limited aging analysis (TLAA). The Standard Review Plan for the design of used-fuel dry storage facilities (NUREG-1567) also refers to the provision of appropriate corrosion allowances for materials susceptible to corrosion. Accordingly, the loss of material due to general corrosion is treated here as a time-dependent aging effect requiring management for low-alloy steel, carbon steel, and cast iron components in outdoor environments. Examples of such components include anchoring dowels between concrete storage modules and concrete pads, anchors in concrete walls to support canisters inside storage modules, steel liners, and carbon steel heat-shielding plates. For such components and structures that are subject to loss of material due to general corrosion in outdoor or uncontrolled indoor environments, the applicant must ensure that these corrosion analyses are valid for the requested period of extended operation.

III.3.2 Dispositioning the Time-Limited Aging Analysis

The acceptance criteria for the TLAAs associated with corrosion analysis of metal components should delineate acceptable methods for meeting the U.S. Nuclear Regulatory Commission's (NRC's) guidelines stated in NUREG-1927, Section 3.5.1(5) (i) and (ii).

III.3.2.1 Corrosion Allowances

NUREG-1567 states in Section 5.4.1.3 that, in the design criteria for confinement structures in used-fuel dry storage facilities, "appropriate corrosion allowances should be established and used in the structural analyses." In addition, Section 5.5.1.3 of NUREG-1567 states that for confinement structures, systems, and components (SSCs), the applicant should evaluate the potential for corrosion to ensure that adequate corrosion allowances for materials susceptible to corrosion have been provided in these analyses. These same considerations carry over to the evaluation of applications for license renewal for such facilities. The acceptance criteria for the TLAAs associated with corrosion analysis of metal components should delineate acceptable methods for meeting the U. S. Nuclear Regulatory Commission's (NRC's) guidelines stated in NUREG-1927 Section 3.5.1 criterion: 5(i) The analyses have been projected to the end of the period of extended operation, or 5(ii) The effects of aging on the intended function(s) of the SCC will be adequately managed for the period of extended operation. Component replacement is an acceptable option for managing the TLAA.

III.3.2.2 Corrosion Effects Management

The management of corrosion effects, as described in NUREG-1927, Section 3.5.1(5) criterion (ii), may be used for managing this TLAA for SSCs where insufficient corrosion allowance is available to satisfy criterion (i). The most direct approach to such corrosion management is replacement of the SSC in question, but the applicant may propose alternative site-specific approaches such as inspection or surveillance of corrosion management to satisfy criterion (ii). The applicant may propose periodic surface and volumetric inspections of those SSCs subject to loss of material due to corrosion during the requested period of extended operation, using techniques and procedures similar to those described in the Section IV.M3 "Welded Canister Seal and Leakage Monitoring

Program." Such inspections are subject to the general requirements of the ASME Boiler and Pressure Vessel Code, Section XI, Subsections IWB-1100, IWC-1100, and IWD-1100 for Class 1, 2, and 3 components, respectively. If volumetric examination of those SSCs subject to loss of material due to corrosion during the requested period of extended operation is not feasible because of high dose, accessibility, or ALARA considerations, the licensee has to demonstrate continued service (i.e., intended functions of those SSCs would continue to be maintained during the requested period of extended operation).

NUREG-1927, Appendix E, discusses the specific example of periodic inspections of the steel support structure in a facility for horizontal storage module canister support steel. This discussion states that such inspections are "especially pertinent for ISFSIs located at coastal marine sites where atmospheric corrosion is known to be more severe. Support structure inspection may be done on a sampling basis. Selection of one or more support structures to be inspected should be based on longest service time, material, and/or environmental conditions. Normally, carbon steel is specified for this support structure. Some locations may have employed protective coatings on the support structure. Other ISFSI locations may have employed 0.2% copper-bearing steel. Differences in materials and environmental conditions at various sites could make comparisons between different ISFSI sites invalid. The licensee should specify the re-inspection interval for the support structure on the basis of the findings of the initial license renewal inspection."

Some components, such as anchoring dowels between concrete storage modules and concrete pads, are inaccessible for inspection. In this situation, a site-specific AMP will be required if the TLAA cannot demonstrate that failure is not expected.

III.3.3 Final Safety Analysis Report Supplement

Information should be included in the FSAR supplement that provides a summary description of the evaluation of the TLAA on corrosion analysis of metal components. Further details are given in Section III.1.3.

III.3.4 References

ASME Boiler and Pressure Code, Section XI, Rules for Inservice Inspection of Nuclear Power Plant Components, ASME Boiler and Pressure Vessel Code, 2004 edition as approved in 10 CFR 50.55a, American Society of Mechanical Engineers, New York, 2004.

NUREG-1567, Standard Review Plan for Spent Fuel Dry Storage Facilities, Nuclear Regulatory Commission, Washington, DC, March 2000.

NUREG-1927, Standard Review Plan for Renewal of Spent Fuel Dry Cask Storage System Licenses and Certificates of Compliance—Final Report, Nuclear Regulatory Commission, Washington, DC, March 2011.

III.4 Time-Dependent Degradation of Neutron-Absorbing Materials

III.4.1 Description of the Time-Limited Aging Analysis

Dry cask storage systems (DCSSs) commonly incorporate neutron-absorbing materials into their design to provide neutron absorption and, during the short period of time when the cask is flooded with water during fuel loading and unloading, to provide criticality control. Once the canister/cask has been drained, dried, and inerted, the absence of the moderating effect of the hydrogen atoms in the water renders the fuel subcritical by a substantial margin (Sindelar et al. 2011). The specific neutron absorber most commonly used in neutron-absorbing materials is boron in a chemically stable form such as B_4C, or less commonly AlB_2, TiB_2, or CrB_2. The isotope B-10, which comprises approximately 20% of naturally occurring B, has a large thermal neutron absorption cross section. The B_4C is incorporated into a suitable matrix, which may be metallic, polymeric, or cementitious, to provide the mechanical, physical, and fabrication characteristics required during use.

A distinction is made between neutron-absorbing materials, which are covered under this time-limited aging analysis (TLAA), and gamma and neutron radiation-shielding materials, which are covered under Section III.5 (described in the next section). For the purposes of this distinction, the "neutron-absorbing materials" discussed here are those materials that are positioned in and immediately around the fuel basket inside the canister (or cask) for the primary purpose of criticality control. These materials incorporate boron (or, less commonly, cadmium or gadolinium) in some chemical form as a neutron absorber or neutron "poison." Some of these same materials, as well as polymer resins, polyethylene, and other low-Z materials that do not contain neutron poisons, are also positioned outside the canister to attenuate or absorb neutrons, primarily for biological shielding. Even though some of the materials are the same, the operating environment and functional requirements are different, and the biological shielding application is treated in the subsequent Section III.5 on radiation-shielding materials.

Specific examples of commercial neutron-absorbing materials, some of which are used in DCSSs, are listed below. All use B_4C as the neutron absorber, except as indicated:

<u>Aluminum alloy/boron carbide metal matrix composites</u>
Metamic, BORTEC

<u>Aluminum alloy/boron carbide cermets</u>
BORAL (Al clad)

<u>Borated aluminum alloys</u>
BorAluminum (AlB_2/TiB_2 absorber)

<u>Borated stainless steels</u>
NeutroSorb Plus, Neutronit

<u>Silicone rubber/boron carbide composites</u>
NS-1, Boro-Silicon, Boraflex, Bocarsil

<u>Borated phenolic resin compounds</u>
NS-4-FR, Holtite-A, Carborundum B_4C

<u>Borated concrete</u>
BISCO NS-3

III.4.1.1 Degradation of Neutron-Absorbing Materials

Neutron-absorbing materials in spent-fuel storage pools have been found to be subject to several forms of time-dependent degradation. Although water exposure is not a factor in dry storage (except for the brief periods during fuel loading and unloading), high radiation fields are present and temperatures are higher in dry cask storage than in pool storage. Similar degradation of these materials in DCSSs has not been reported to date, but service times in DCSS applications have not been as long as in spent-fuel storage pools. In addition, unlike spent-fuel storage pools, the neutron-absorbing materials in DCSSs are not accessible for periodic examination. Examples of the degradation of specific neutron-absorbing materials in spent-fuel storage pools, as well as some potential degradation modes that have not been observed in service, are summarized below.

III.4.1.1.1 BORAL

BORAL has been found to be subject to degradation due to localized corrosion and blister formation in the aluminum alloy cladding. In a boiling water reactor (BWR) pool environment, localized corrosion can occur at weak spots in the passivation oxide film. In a borated pressurized water reactor (PWR) pool environment, localized corrosion can occur at sites of surface imperfections and/or residual surface contaminants left from the manufacturing process. This localized corrosion can take the form of pitting, crevice corrosion, galvanic corrosion, intergranular corrosion, or exfoliation. Some of the most extensive localized corrosion has been observed in PWR surveillance coupons clad in stainless steel capsules (EPRI 1019110). It should be noted that, to date, no instances of decrease in B-10 areal density in BORAL neutron absorbers in spent-fuel storage pool service have been observed as a result of localized corrosion of the cladding. In addition, localized corrosion processes appear to be much less likely in the dry, inert conditions that are present in DCSS service except during loading and unloading. However, localized corrosion cannot be ruled out without additional site-specific information concerning DCSS design parameters and operating conditions.

Blistering of the BORAL Al cladding was first observed at Yankee Rowe in 1964. Blisters have been observed in both surveillance coupons and spent-fuel storage racks containing BORAL, including more recent occurrences at Beaver Valley and Susquehanna (NRC IN 2009-26). The blisters are characterized by a local area where the Al cladding separates from the underlying B_4C-Al composite, and the cladding is physically deformed outward. While this blistering has not been observed to alter the neutron-absorption properties of the material, it does lead to concerns about fuel removal in storage pools and potential increases in the reactivity state of the fuel/rack configuration due to geometry changes (EPRI 1019110). Fuel retrievability in DCSS casks and canisters could also be negatively impacted by such blistering.

In 1998, Vogtle installed additional spent-fuel racks in the Unit 1 pool that used BORAL as the neutron absorber. Aluminum concentrations in the spent-fuel pool water have increased since the introduction of these racks, but the resulting concentrations have not resulted in any significant problems. Nonetheless, this situation bears continued monitoring (Vogtle, 2007).

For dry cask storage, the NRC has noted that water can penetrate into the porous BORAL neutron-absorber inner layer during fuel loading and may lead to blistering of the cladding, physical degradation ("crumbling") of the underlying composite material, or deformation ("relocation") of the BORAL during the elevated-temperature storage period. In addition, physical damage to the BORAL is considered possible when the cask is quenched by reflooding during subsequent fuel

unloading. This possibility leads to concerns about inadvertent criticality during unloading because of the re-introduction of water, which serves as a neutron moderator (Sindelar, 2011). Maintaining the integrity of the BORAL neutron-absorber material throughout the life of the cask is, therefore, important. As possible solutions, the NRC has proposed testing of BORAL under simulated conditions to determine if crumbling or relocation occurs, and, if it does, repairing the susceptible casks under dry conditions or introducing water with a soluble neutron absorber during unloading (NRC ISG-23).

III.4.1.1.2 Carborundum Borated Phenolic Resin Plates

In July 2008, Palisades discovered that the spent-fuel pool storage racks contained less neutron-absorbing material than assumed in their criticality analysis and that they were in noncompliance with the applicable technical specification. An inspection of selected fuel racks revealed that the B-10 areal density was, at a minimum, approximately one-third of its original design value. The exact degradation mechanism or mechanisms are not clearly understood, but it has been suggested that the swelling is due to hydrogen off-gas generated when the Carborundum neutron absorber is exposed to gamma radiation and/or dimensional changes of the neutron absorbing plates in the spent fuel pool service environment (EPRI 1019110, 2009). A subsequent analysis determined that criticality requirements were met even for a complete loss of boron in the Carborundum plates (ANP-2858-001, 2009). The degradation manifests itself in the form of absorber plate swelling and deformation and loss of B-10 areal density (NRC IN 2009-26). Other neutron-absorbing materials utilizing a phenolic resin base should be carefully evaluated for similar aging-related degradation, on the basis of the experience described here.

III.4.1.1.3 Aluminum Matrix Absorber Materials

Metallic materials are generally considered to be subject to creep under conditions of extended exposure to stress and temperature in excess of a homologous temperature of $0.4T_m$, where T_m is melting point in degree Kelvin. For aluminum (Al) alloys, this translates to a temperature of approximately 100°C (212°F). Extended times at temperatures in excess of this value are anticipated for many cask designs, and the potential for creep deformation of Al-alloy and Al-matrix neutron-absorber materials must be considered. Such deformation and loss of dimensional stability could adversely impact both criticality control and fuel retrievability. No operating experience on the exposure of these materials to temperatures in excess of 100°C (212°F) for tens of years is available, and the variability in basket and cask designs requires that any such creep analysis be performed on a design-specific basis.

The potential long-term oxidation of Al-alloy and Al-matrix neutron-absorber materials must also be considered. Limited corrosion associated with residual moisture within the canister (or cask) as a result of incomplete drying or waterlogged fuel rods may occur immediately after fuel loading. This residual water would be consumed very early in the storage period through corrosion processes, and the corrosion would cease. However, air ingress into a breached confinement boundary of canister/cask could lead to continued oxidation of the basket and neutron-absorber materials. This process could result in a loss of structural strength and dimensional stability. Again, the variability in basket and cask designs requires that the analysis of any long-term oxidation effects be performed on a design-specific basis.

III.4.2 Dispositioning the Time-Limited Aging Analysis

The aging-related degradation of neutron-absorbing materials in the spent-fuel racks of nuclear power plants is treated by two Aging Management Programs (AMPs) in NUREG-1801, Rev. 2, namely, XI.M22 ("Boraflex Monitoring") and XI.M40 ("Monitoring of Neutron-Absorbing Materials Other Than Boraflex"). Both of these are condition-monitoring programs that include no preventive actions. However, the neutron-absorbing material in a spent-fuel storage canister/cask is not accessible for direct condition monitoring. Thus, an AMP based on condition monitoring is not appropriate for managing possible aging effects. For this reason, NUREG-1927 cites depletion of neutron-absorber material as an example of a situation requiring a TLAA. Because of the variety of DCSSs in use and the wide range of associated operating parameters and conditions, no universal guidelines can be provided for meeting the NRC's TLAA review guidance stated in NUREG-1927, Section 3.5.1(5) (i) and (ii). Therefore, this TLAA must be performed on a cask- or canister-specific basis using a suitable methodology that conforms to the general guidance summarized here.

III.4.2.1 10 CFR 72.124(b) Requirements

All applicable requirements in 10 CFR Part 72.124(b) regarding methods of criticality control for the licensing of an Independent Spent Fuel Storage Installation (ISFSI) also apply to license renewal for that facility, as well as for monitored retrievable storage (MRS). Specifically, 10 CFR 72.124(b) states the following:

> Methods of criticality control. When practicable, the design of an ISFSI or MRS must be based on favorable geometry, permanently fixed neutron absorbing materials (poisons), or both. Where solid neutron absorbing materials are used, the design must provide for positive means of verifying their continued efficacy. For dry spent fuel storage systems, the continued efficacy may be confirmed by a demonstration or analysis before use, showing that significant degradation of the neutron absorbing materials cannot occur over the life of the facility.

As stated above, the demonstration or analysis showing that significant degradation of the neutron-absorbing materials cannot occur over the extended life of the facility must be performed on a site-specific basis.

III.4.2.2 NRC ISG-23

ASTM Standard Practice C1671-07 addresses issues related to this TLAA. NRC ISG-23 provides guidance on the application of this standard practice when performing technical reviews of spent-fuel storage and transportation packaging licensing actions. This guidance is also applicable to the license renewal process for DCSSs.

ISG-23 basically states that ASTM Standard Practice C1671-07 provides acceptable guidance for performing technical reviews of spent-fuel storage and transportation packaging licensing actions with the additions, clarifications, and exceptions noted. With respect to the requalification of neutron absorbing material (as when process changes are made), ISG-23 states the following:

> Clarification regarding use of Section 5.2.1.3 of ASTM C1671-07. If the supplier has shown that process changes do not cause changes in the density, open porosity, composition, surface finish, or cladding (if applicable) of the neutron absorber material, the supplier

should not need to re-qualify the material with regard to thermal properties or resistance to degradation by corrosion and elevated temperatures.

ISG-23 also states that when a change in supplier is made, "the supplier should do a review of key process and controls and perform qualification testing demonstrating that the neutron absorbing material has the specified mechanical properties, density, porosity, and (if applicable) resistance to blistering as discussed in the technical specifications."

III.4.2.3 NRC ISG-15

NRC ISG-15, Section X.5.2.7, provides guidance and review procedures for neutron-absorbing/poison materials for control of criticality. This guidance states the following:

> For all boron-containing materials, the reviewer should verify that the SAR and its supporting documentation describe the material's chemical composition, physical and mechanical properties, fabrication process, and minimum poison content. This description should be detailed enough to verify the adequacy and reproducibility of properties important to performance as required in the SAR. For plates, the minimum poison content should be specified as an areal density (e.g., milligrams of B-10 per cm^2). For rods, the mass per unit length should be specified.
>
> In heterogeneous absorber materials, the neutron poisons may take the form of particles dispersed or precipitated in a matrix material. Materials with large poison particles (e.g., 80-micrometer particles of unenriched boron carbide) have been shown to absorb significantly fewer neutrons than homogeneous materials with the same poison loading. The reduced neutron absorption in heterogeneous materials results from particle self-shielding effects, streaming and channeling of neutrons between poison particles. Therefore, the reviewer should verify that the absorber material's heterogeneity parameters (e.g., particle composition, size, dispersion) are adequately characterized and controlled, and that the criticality calculations employ appropriate corrections (e.g., reduced poison content) when modeling the heterogeneous material as an idealized homogeneous mixture.

III.4.3 Final Safety Analysis Report Supplement

Information should be included in the FSAR supplement that provides a summary description of the evaluation of the TLAA associated with the degradation of neutron-absorbing materials. Further details are given in Section III.1.3.

III.4.4 References

10 CFR 72.124(b), Criteria for Nuclear Criticality Safety, Methods of Criticality Control, Nuclear Regulatory Commission, 1-1-12 Edition, 2012.

ANP-2858-001, Attachment 4, Palisades SPF Region 1 Criticality Evaluation with Burnup Credit, AREVA NP, Inc., August 2009 (ML092450684).

ASTM C1671-07, Standard Practice for Qualification and Acceptance of Boron Based Metallic Neutron Absorbers for Nuclear Criticality Control for Dry Cask Storage Systems and

Transportation Packaging, American Society for Testing and Materials, West Conshohocken, PA, 2007.

EPRI 1019110, Handbook of Neutron Absorber Materials for Spent Nuclear Fuel Transportation and Storage Applications—2009 Edition, Electric Power Research Institute, Palo Alto, CA, November 2009.

NRC IN 2009-26, Degradation of Neutron-Absorbing Materials in the Spent Fuel Pool, Information Notice, Nuclear Regulatory Commission, Washington, DC, October 28, 2009.

NRC ISG-15, Materials Evaluation, Interim Staff Guidance, Nuclear Regulatory Commission, Washington, DC, January 2001.

NRC ISG-23, Application of ASTM Standard Practice C1671-07 When Performing Technical Reviews of Spent Fuel Storage and Transportation Packaging Licensing Actions, Interim Staff Guidance, Nuclear Regulatory Commission, Washington, DC, January 2011.

NUREG-1801, Generic Aging Lessons Learned (GALL) Report, Revision 2, Nuclear Regulatory Commission, Washington, DC, December 2010.

NUREG-1927, Standard Review Plan for Renewal of Spent Fuel Dry Cask Storage System Licenses and Certificates of Compliance—Final Report, Nuclear Regulatory Commission, Washington, DC, March 2011.

Sindelar, R.L., Duncan, A.J., Dupont, M.E., Lam, P.S., Louthan, M. R., Jr., Skidmore, T.E., Einziger, R.E., Materials Aging Issues and Aging Management for Extended Storage and Transportation of Spent Nuclear Fuel, NUREG/CR-7116, Savannah River National Laboratory, Aiken, SC, November 2011.

Vogtle Electric Generating Plant Units 1 and 2, License Renewal Application, Southern Nuclear Operating Company, Inc., June 30, 2007 (ML071840360).

III.5 Time-Dependent Degradation of Radiation-Shielding Materials

III.5.1 Description of the Time-Limited Aging Analysis

Dry cask storage systems (DCSSs) commonly incorporate radiation (from neutron and gamma)-shielding materials into their design to provide radiation protection. Concrete, steel, depleted uranium, and lead typically serve as gamma shields, while hydrogenous materials such as polymer resins and polyethylene, as well as other low-Z materials, are often used for neutron shielding. These shielding materials may be subjected to time-dependent degradation due to various factors.

As stated in Section III.4 ("Time-Dependent Degradation of Neutron-Absorbing Materials"), materials containing boron or some other neutron poison, which are commonly installed inside the spent-fuel canister (or cask) as neutron absorbers, are also sometimes used for neutron shielding outside the canister. Because the operating environment and functional requirements are different for the two applications, the use of these shielding materials outside the canister (or cask) is addressed in this time-limited aging analysis (TLAA).

A TLAA may consist of calculation of a bounding dose based on a bounding dose rate of the source term or a bounding acceptable dose of the structures, systems, and components (SSCs) under consideration over the requested period of extended operation, supplemented in some cases (e.g., in reasonably accessible locations/environments) by periodic inspection/monitoring. NRC ISG-15 provides guidance on gamma- and neutron-shielding materials and their possible degradation processes.

III.5.2 Degradation of Radiation-Shielding Materials

Radiation-shielding materials in DCSSs may be subject to several forms of time-dependent degradation. Examples of the degradation of specific radiation-shielding materials in DSCC environments are provided in NRC ISG-15 and summarized below.

The properties and performance of these shielding materials are temperature-sensitive, and one must ensure that these shielding materials will not be subject to temperatures above their design limits during either normal or accident conditions. The potential for shielding materials to experience changes in material densities at temperature extremes at some time during their usage needs to be taken into account. Higher temperatures may reduce hydrogen content through loss of water in concrete or other hydrogenous shielding materials.

For externally deployed polymer-based neutron-shielding materials, the thermal stability of the resin over the design life at the higher end of the design operating temperature regime needs to be verified. Reasonable assurance may be provided through testing programs. Polymers generally have a relatively large coefficient of thermal expansion when compared to metals. Therefore, the neutron shield design needs to include elements to ensure that excessive neutron streaming will not occur as a result of shrinkage under conditions of extreme cold. Differently formulated shielding materials would require new testing regarding neutron shielding, thermal stability, and handling properties during mixing and pouring or casting. It also should be verified that any filled channels used on production casks did not have significant voids or defects that could lead to greater than calculated dose rates.

III.5.3 Dispositioning the Time-Limited Aging Analysis

NUREG-1927, Section 3.5.1, provides guidance and criteria for the review of TLAAs contained in applications for Independent Spent Fuel Storage Installation (ISFSI) license renewal. However, because of the variety of DCSSs in use and the wide range of associated operating parameters and conditions, no universal guidelines can be provided for meeting the guidance stated in NUREG-1927, Section 3.5.1(5) (i) and (ii). Therefore, this TLAA must be performed on a site-specific basis using a suitable methodology that conforms to the general guidance summarized here.

III.5.3.1 10 CFR 72.42(a)(1), 72.126(a), and 72.128(a) Requirements

All applicable requirements in 10 CFR Part 72.126 and 72.128 for criteria for radiological protection for the licensing of an ISFSI also apply to license renewal for that facility. Specifically, 10 CFR 72.126(a)(6) states the following:

> Exposure Control: Radiation protection systems must be provided for all areas and operations where on-site personnel may be exposed to radiation or airborne radioactive materials. Structures, systems, and components for which operation, maintenance, and required inspections may involve occupational exposure must be designed, fabricated, located, shielded, controlled, and tested so as to control external and internal radiation exposures to personnel. The design must include means to . . . shield personnel from radiation exposure.

10 CFR 72.128(a)(2) states the following:

> Spent fuel and high-level radioactive waste storage and handling systems: Spent fuel storage, high-level radioactive waste storage, reactor-related GTCC waste storage and other systems that might contain or handle radioactive materials associated with spent fuel, high-level radioactive waste, or reactor-related GTCC waste, must be designed to ensure adequate safety under normal and accident conditions. These systems must be designed with . . . suitable shielding for radioactive protection under normal and accident conditions.
>
> The demonstration or analysis that significant degradation of the shielding capabilities of radiation-shielding materials cannot occur over the extended life of the facility may be satisfied by a TLAA. This is in accordance with the requirements of 10 CFR 72.42 ("Duration of License Renewal"), which states that "application for ISFSI license renewals must include the following: (1) TLAAs that demonstrate that structures, systems, and components important to safety will continue to perform their intended function for the requested period of extended operation . . .

III.5.3.2 NRC ISG-15

NRC ISG-15 provides guidance on a number of material-related issues identified for DCSS design and field implementation. There is a need for specific guidance for the review of materials selected by the applicant for its DCSS or transportation package. This guidance is also applicable to the license renewal process for DCSSs. The principal purpose of the materials review in ISG-15 is to obtain reasonable assurance that materials selected for each component are adequate for performance of the safety function(s) required of that component.

Of specific relevance to this TLAA is the guidance/review provided by ISG-15 for gamma- and neutron-shielding materials. The possible effect of degradation of shielding capabilities of the radiation-shielding materials over the requested period of extended operation described in ISG-15 should be identified and a TLAA performed to evaluate the potential degradation and its impact on the intended function of shielding material. Section X.5.2.6 ("Gamma and Neutron Shielding Materials") of ISG-15 states the following:

> Concrete, steel, depleted uranium, and lead typically serve as gamma shields, while filled polymers are often used for neutron shielding materials. The reviewer should confirm that temperature-sensitive shielding materials will not be subject to temperatures at or above their design limits during both normal and accident conditions. The reviewer should determine whether the applicant properly examined the potential for shielding material to experience changes in material densities at temperature extremes. (For example, elevated temperatures may reduce hydrogen content through loss of water in concrete or other hydrogenous shielding materials.)
>
> With respect to external polymer neutron shields, the reviewer should verify that the application
>
> - Describes the test(s) demonstrating the neutron absorbing ability of the shield material.
> - Describes the testing program and provides data and evaluations that demonstrate the thermal stability of the resin over its design life while at the upper end of the design temperature range. It should also describe the nature of any temperature-induced degradation and its effect(s) on neutron shield performance.
> - Describes what provisions exist in the neutron shield design to assure that excessive neutron streaming will not occur as a result of shrinkage under conditions of extreme cold. This description is required because polymers generally have a relatively large coefficient of thermal expansion when compared to metals.
> - Describes any changes or substitutions made to the shield material formulation. For such changes, describes how they were tested and how that data correlated with the original test data regarding neutron absorption, thermal stability, and handling properties during mixing and pouring or casting.
> - Describes the acceptance tests that were conducted to verify that any filled channels used on production casks did not have significant voids or defects that could lead to greater than calculated dose rates.

III.5.3.3 Oconee Site-Specific ISFSI License Renewal

Experience gained from site- or design-specific DCSS and transportation package application reviews and field implementation may provide reasonable site-specific or design-specific guidelines for a TLAA program. An example is the review of the application for a renewal of the Oconee Nuclear Station Site-Specific ISFSI, Nuclear Material License No. SNM-2503, for a total period of 40 years. The total 40-year renewal period includes a renewal period of 20 years, per 10 CFR 72.42 prior to 2010 before the rule change, with an exemption request to permit operation for an additional 20 years. The safety evaluation report SER 72-04 states the following:

> The ONS Site-Specific ISFSI uses the NUHOMS-24P horizontal storage module design. Each HSM contains one dry storage canister (DSC), and each DSC contains 24 irradiated fuel assemblies (IFAs). This design employs a stainless steel, all-welded, DSC that is placed horizontally into a concrete shielding structure called the HSM. The HSM functions as the primary radiation shield, . . .

Two SSCs are relevant for consideration of radiation-shielding effects. They are the horizontal storage modules (HSMs) and the transfer cask. The neutron-shielding materials in the HSM doors are BISCO NS-3 and concrete. The gamma energy flux deposited in the HSM concrete is 6.8 x 10^{10} MeV/cm^2-sec. The accumulated fluence for the HSM is 1.44 x 10^{14} neutron/cm^2 for 60 years.

As stated in the Oconee safety evaluation report SER 72-04, the licensee did not identify any aging effects on BISCO NS-3 shielding material in the HSM doors that require management during the renewed license period, since the material is fully encapsulated and exposure temperature would not cause degradation. However, degradation due to radiation exposure was considered to be manageable by a TLAA program through the renewed license period. The licensee did not provide any information on changes to the shielding capability of concrete material density at temperature extremes. However, the licensee's monthly dose rate measurement of the exterior of HSMs provides a trending of any adverse condition that can be addressed by Duke's Problem Investigation Process. The assumptions in the analyses are conservative, given that the licensee assumed a constant dose rate. The actual dose rate will decrease significantly during the 60-year service life.

The transfer cask provides radiological shielding during the DSC drying operation and during the transfer to the HSM. Since the fuel canister does not contain sufficient shielding materials by itself, a separate, heavily shielded transfer cask is used to transport the loaded fuel canisters from the loading building to the HSM.

The SER describes the BISCO NS-3 and concrete radiation exposure TLAA as follows:

> The materials that provide radiation shielding during the service life of ONS [Oconee Nuclear Station] Site-Specific ISFSI are BISCO NS-3 and the HSM concrete. Concrete typically serves as gamma and neutron shielding, while the polymers are usually only used for neutron shielding. BISCO NS-3 neutron shielding material is used at phase 1 HSM doors and between the cask outer shell and the neutron shield jacket of the transfer cask.
>
> HSM Doors**:** The licensee calculated the gamma dose rate to be 330 mrem/hr to the door cavity of the HSM. This results in an integrated gamma dose of approximately 1.8 x 10^5 Rads for a service life of 60 years. This is well below the service limit of 1.5 x 10^{10} Rads for the BISCO NS-3 material.
>
> Transfer Cask**:** The licensee estimated gamma and neutron dose rates at the inner surface of BISCO NS-3 in the cask are 250 mrem/hr and 959 mrem/hr, respectively. The licensee conservatively assumed that the transfer cask neutron shielding was exposed to the same neutron fluence as the HSM interior concrete surface. The integrated neutron fluence is 1.44 x 10^{14} neutrons/cm^2, and is less than the service limit for the BISCO NS-3 material for both fast and thermal neutron exposure.

HSM Concrete: The integrated neutron fluence in the HSM concrete for 60 years is 1.44×10^{14} neutron/cm^2. This is below the service limits for the material for fast and thermal neutron exposure, 1.6×10^{17} neutron/cm^2 and 1.5×10^{19} neutron/cm^2, respectively. The staff finds that the assumptions in the analyses above are conservative because the licensee assumed a constant dose rate while the actual dose rate decreases significantly during the 60-year service life. Furthermore, the licensee is committed to perform monthly dose rate measurement of the exterior of the HSMs. The staff finds that the licensee's TLAAs provide reasonable assurance that the BISCO NS-3 and HSM concrete materials will perform their intended function for the term of the license renewal period, require no further action and meet the requirements for license renewal.

III.5.4 Final Safety Analysis Report Supplement

Information should be included in the FSAR supplement that provides a summary description of the evaluation of the TLAA associated with the radiation-shielding materials. Further details are given in Section III.1.3.

III.5.5 References

10 CFR 72.42, Duration of license renewal, Nuclear Regulatory Commission, 1-1-12 Edition, 2012.

10 CFR 72.126(a), Criteria for Radiological Protection, Nuclear Regulatory Commission, 1-1-12 Edition, 2012.

10 CFR 72.128, Criteria for Spent Fuel, High-Level Radioactive Waste, and Other Radioactive Waste Storage and Handling, Nuclear Regulatory Commission, 1-1-12 Edition, 2012.

NRC ISG-15, Materials Evaluation, Interim Staff Guidance, Nuclear Regulatory Commission, Washington, DC, January 2001.

NUREG-1927, Standard Review Plan for Renewal of Spent Fuel Dry Cask Storage System Licenses and Certificates of Compliance—Final Report, Nuclear Regulatory Commission, Washington, DC, March 2011

SER 72-04, Safety Evaluation Report, Docket No. 72-04, Duke Power Company, LLC Oconee Nuclear Station Independent Spent Fuel Storage Installation, License No. SNM-2503 License Renewal (ML 091520159), December 2010.

Page intentionally blank

III.6 Environmental Qualification of Electrical Equipment

The GALL report includes TLAA X.E1 ("Environmental Qualification of Electric Components") to demonstrate that certain electrical components located in harsh plant environments (that is, those areas of the plant that could be subject to the harsh environmental effects of a loss of coolant accident (LOCA), high energy line breaks, or post-LOCA environment) are qualified to perform their safety function in those harsh environments even after taking into account the effects of in-service aging. There are no analogous environments or electrical control systems in dry cask storage systems, and the aging-related degradation of electrical monitoring equipment in these systems can be adequately managed by plant maintenance procedures. A TLAA for the environmental qualification of electrical equipment in dry cask storage systems is therefore not required.

Page intentionally blank

III.7 Other Site-Specific Time-Limited Aging Analyses

III.7.1 Description of the Time-Limited Aging Analyses

Certain site-specific safety analyses may have been performed for structures, systems, and components (SSCs) on the basis of an explicitly assumed 40- to 60-year life (for example, aspects of the cask or canister design). The concern with respect to license renewal is that these analyses may not have properly considered the length of the requested period of extended operation, which may change conclusions with regard to safety and the capability of SSCs within the scope of the license renewal requirement to perform one or more safety functions. The review of these TLAAs provides assurance that the aging effect is properly addressed through the requested period of extended operation. Analogous to the requirements of 10 CFR 54.21(c) for the renewal of operating licenses for nuclear power plants, NUREG-1927 states that the applicant for renewal of an Independent Spent Fuel Storage Installation (ISFSI) license or dry cask storage system (DCSS) Certificate of Compliance (CoC) is required to evaluate TLAAs to verify that the analyses remain valid during the requested period of extended operation. In addition, site-specific TLAAs may have evolved since issuance of the initial operating license or CoC. Section 3.5.1 of NUREG-1927 provides the guidance on identification of TLAAs.

As stated in NUREG-1927, an applicant must provide a listing of applicable TLAAs in the renewal application, and these TLAAs are identified following the guidance in Section III.1 of this report. On the basis of lessons learned in the review of the initial license renewal applications, evaluations of several commonly encountered TLAAs have been developed and are described in Sections III.2 to III.5. Other site-specific TLAAs that are identified by the applicant are evaluated following the generic guidance recommended in this section.

III.7.2 Dispositioning the Time-Limited Aging Analyses

The acceptance criteria for the TLAAs identified in Subsection III.7.1 should delineate acceptable methods by meeting the following five criteria, listed in Section 3.5.1 of NUREG-1927:

(1) The TLAA should involve time-limited assumptions defined by the current operating term (e.g., 20 or 40 years). The defined operating term should be explicit in the analyses. Simply asserting that the SSC is designed for a service life or ISFSI life is not sufficient. Calculations, analyses, or testing that explicitly includes a time limit should support the assertions.

(2) The TLAA should already be contained or incorporated by reference in the design documents. Such documentation includes the (a) Safety Analysis Report, (b) Safety Evaluation Report, (c) technical specifications, (d) correspondence to and from the Nuclear Regulatory Commission, (e) QA plan, and (f) topical reports included as references in the SAR.

(3) The TLAA must address SSCs that are within the scope of license renewal and have a predetermined lifespan.

(4) The TLAA must consider the extended operational lifetime of any SSC materials that have a defined lifetime limit (e.g., thermal fatigue condition).

(5) The TLAA should provide conclusions or a basis for conclusions regarding the capability of the SSC to perform its intended function through the license period of extended operation. The TLAA must show either one of the following:

(i) The analyses have been projected to the end of the period of extended operation.

(ii) The effects of aging on the intended function(s) of the SSC will be adequately managed for the period of extended operation. Component replacement is an acceptable option for managing the TLAA.

III.7.2.1 NUREG-1927 Section 3.5.1(5)(i)

The applicant should demonstrate that the analyses have been projected to the end of the requested period of extended operation. Either the analyses are shown to be bounding even during the requested period of extended operation, or the analyses are revised for the period of extended operation to show that the TLAA acceptance criteria continue to be satisfied for the period of extended operation.

The applicant should describe the TLAA with respect to the objectives of the analysis, assumptions used in the analysis, conditions, acceptance criteria, relevant aging effects, and intended function(s). The applicant should demonstrate that (a) conditions and assumptions used in the analysis already address the relevant aging effects for the period of extended operation, and (b) acceptance criteria are maintained to provide reasonable assurance that the intended function(s) is maintained for the period of extended operation. Thus, no reanalysis would be necessary for license renewal.

In some instances, the applicant may identify activities to be performed to verify the assumption basis of the calculation, such as cycle counting. The applicant should provide an evaluation of that activity. It should be verified that the applicant's activity is sufficient to confirm the calculation assumptions for the initial license term plus the requested period of extended operation. If necessary, the TLAA may require modification or recalculation to extend the period of evaluation to include the period of extended operation.

III.7.2.2 NUREG-1927 Section 3.5.1(5)(ii)

The applicant may propose an aging management program (AMP) to manage the aging effects associated with the TLAA using inspections or examinations. The AMP should ensure that the effects of aging on the intended function(s) of the SSCs important to safety are adequately managed in a manner consistent with the original licensing basis for the period of extended operation.

Under this option, the applicant identifies the SSCs associated with the TLAA, and demonstrates the adequacy of the inspection interval of the AMP. If a mitigation or inspection program is proposed, the applicant should use the guidance provided in Section 3.5 of NUREG-1927 to ensure that the effects of aging on the intended function(s) of the structures and components are adequately managed for the period of extended operation.

III.7.3 Final Safety Analysis Report Supplement

Information should be included in the FSAR supplement that provides a summary description of the evaluation of the site-specific TLAAs. Additional information is given in Subsection III.1.3.

III.7.4 References

10 CFR 54.21, Requirements for Renewal of Operating Licenses For Nuclear Power Plant: Contents of Application—Technical Information, Office of the Federal Register, National Archives and Records Administration, 2011.

NUREG-1927, Standard Review Plan for Renewal of Spent Fuel Dry Cask Storage System Licenses and Certificates of Compliance—Final Report, Nuclear Regulatory Commission, Washington, DC, March 2011.

Page intentionally blank

IV. DESCRIPTION OF AGING MANAGEMENT PROGRAMS

The purpose of the aging management programs (AMPs) is to ensure that the aging effects do not result in a loss of the intended safety functions of the structure, systems, and components (SSCs) that are within the scope of the original license agreements, or in the case of license renewal, for the term of the renewal. Managing aging effects on SSCs in dry cask storage systems (DCSSs) and Independent Spent Fuel Storage Installations (ISFSIs) during extended long-term storage of used fuel includes identification of the materials of construction and the environments to which these materials are exposed. Service conditions, such as temperature, wind, humidity, rain/snow/water, marine salt, radiation field, and gaseous environment (e.g., external air environment and internal inert-gas environment such as helium), have to be known in order to assess and manage the potential aging effects due to the environmental degradation of materials. Examples of the aging effects/mechanisms for metallic structures and components include loss of material due to corrosion; loss of strength and modulus due to elevated temperature; loss of fracture toughness due to irradiation; loss of preload due to stress relaxation; and cracking due to SCC. Examples of the aging effects/mechanisms for concrete structures and components include scaling, cracking, and spalling due to freeze-thaw; leaching of calcium hydroxide; aggressive chemical attack; reaction with aggregates; shrinkage; settlement; loss of material due to corrosion or abrasion and cavitation; and loss of strength and modulus due to elevated temperature or radiation.

Since DCSSs or ISFSIs consist primarily of passive structures and components, their degradation may not be readily apparent and may, therefore, require one or more of four types of aging management activities: prevention (e.g., coatings), mitigation (e.g., cathodic protection), condition monitoring (e.g., visual inspection), and performance monitoring (e.g., pressure monitoring). While the types and the details of an AMP may vary depending on the specific structure or component, the ten elements of an AMP (see Table I.1) are used to describe the methodology and its implementation in managing the aging effects on DCSSs or ISFSIs structures and components for extended long-term storage. Furthermore, the original design of the dry storage facility may not permit the types of conditions and/or performance monitoring and inspections that are required for extended long-term storage. Therefore, an existing AMP may need to be augmented, or a site-specific AMP may need to be developed, to ensure that the functional and structural integrity of the storage system is maintained during the requested period of extended operation. Though not explicitly stated in the individual AMPs, all aging management activities that involve personnel exposure to ionizing radiation are expected to be carried out in accordance with the principle of ALARA: “as low as reasonably achievable.”

Chapter IV includes seven AMPs, two are related to structural components and five deal with mechanical components in the DCSSs/ISFSIs. These AMPs are described in the following sections.

IV.S1 Concrete Structures Monitoring Program

IV.S1.1 Program Description

The objective of this program is to manage, for reinforced concrete structures of used fuel DCSSs and the reinforced concrete foundation pad, the aging effects of cracking due to freeze-thaw, aggressive chemical attack, loss of bond, and expansion from reaction with aggregates; loss of material and loss of bond due to aggressive chemical attack and corrosion of embedded steel; increase in porosity and permeability and loss of strength due to aggressive chemical attack and

leaching of calcium hydroxide and carbonation or elevated temperature; and reduction of foundation strength from cracking due to differential settlement and erosion of the porous concrete subfoundation. The program includes (a) periodic inspections of exterior and interior surfaces of DCSS concrete structures and components and concrete foundation pad to detect evidence of aging degradation, (b) periodic sampling and testing of groundwater chemistry to monitor any changes in groundwater chemistry, and (c) if applicable, monitoring the effectiveness of cathodic protection systems embedded in concrete structures.

For canister-based DCSSs, the reinforced concrete structures and components [e.g., horizontal storage modules (HSMs) for NUHOMS systems or vertical concrete casks (VCCs) for VSC-24 or NAC-MPC, NAC-UMS, or stand-alone NAC-I28 systems] not only provide radiation shielding but also ensure the stability of the canister (particularly for upright canisters), anchoring, ventilation, and physical protection against severe weather events and other postulated accidents. The reinforced concrete foundation pad is designed to withstand site-specific seismic motions and lateral loading moments, and to maintain adequate bearing capacity. 10 CFR 72.122(b) requires that these structures and components be designed to accommodate the effects of, and to be compatible with, site characteristics and environmental conditions associated with normal operation, maintenance, and testing of these storage facilities and to withstand postulated accidents. These structures and components must also withstand the effects of natural phenomena such as earthquakes, tornados, lightning, hurricanes, floods, tsunamis, and seiches (i.e., a standing wave in a body of water), which must not impair their capability to perform their intended design functions. In addition, 10 CFR 72.122(f) requires that systems and components that are important to safety be designed to permit inspection, maintenance, and testing. Furthermore, 10 CFR 72.236, item (g), requires that the spent fuel storage cask be designed to store the spent fuel safely for at least 20 years and permit maintenance as required. Paragraph (a)(1) of 10 CFR 72.128 requires that used-fuel storage systems be designed to provide the capability to test and monitor components important to safety.

The Concrete Structures Monitoring Program consists of periodic visual inspections of the accessible exterior surfaces of used fuel DCSS concrete structures and structural components that are important to safety, as well as the concrete foundation pads, for evidence of degradation to ensure that aging effects are adequately managed during the requested period of extended operation. The concrete around the anchorage is also inspected for potential loss of concrete anchor capacity due to local concrete degradation such as cracking of concrete due to freeze-thaw at anchor bolt blockouts (Lawler and Krauss, 2009). Identified aging effects are evaluated by qualified personnel using criteria derived from industry codes and standards contained in the facility current licensing bases, including ACI 349.3R, ACI 318, ASCE 11-99, and the American Institute of Steel Construction (AISC) specifications, as applicable.

The program also includes the inspection of interior surfaces of a few selected concrete HSMs or VCCs for evidence of aging degradation or other unanticipated degradation. This inspection is performed by remote means such as a video camera and/or fiber optic technology through the openings of the storage system, such as air inlets or outlets and access doors, provided the sensitivity and effectiveness of the technique is first demonstrated on a site-specific basis. The sample size should be based on the length of time in service, design configuration, site environmental conditions, decay heat load during normal operation, abnormal service conditions, and site maintenance records. The same HSMs or VCCs should be examined during subsequent inspections (for trending considerations). Additional HSMs and VCCs may be added, if deemed necessary.

The program also includes (1) if applicable, periodic sampling and testing of groundwater chemistry to monitor potential seasonal variations due to factors such as winter salting, (2) assessment of the impact of any changes in groundwater chemistry on below-grade concrete structures (e.g., concrete pad), (3) supplemental destructive testing (e.g., petrographic examinations and chemical analyses) of sample material where degradation is indicated or suspected and samples can be taken without compromising structural integrity, and, if applicable, (4) monitoring the effectiveness of cathodic protection systems embedded in concrete structures. The inspection interval should be established on the basis of the site-specific environmental conditions.

IV.S1.1.1 Program Interfaces

The aging degradation effects of metal support structures such as DCSS overpacks, metal liners, bolting, access doors, vents, or sealing materials (polyurethane foam or other materials), as well as lightning protection system (if applicable), are managed by the AMP in Section IV.M1, "External Surfaces Monitoring of Mechanical Components," and aging degradation effects on protective coatings applied to the external surfaces of carbon steel structures are managed by the AMP in Section IV.S2, "Monitoring of Protective Coating on Carbon Steel Structures." Furthermore, the designs of DCSS concrete structures, such as the HSMs for NUHOMS systems or VCCs for VSC-24 or NAC-MPC, NAC-UMS, or stand-alone NAC-I28 systems, include a fatigue analysis and other time-limited aging analyses (TLAAs), such as degradation of shielding materials. If these analyses meet the five criteria of Section 3.5.1 of NUREG-1927, their validity should be verified for the requested period of extended operation in accordance with the TLAAs described in Sections III.2, "Fatigue of Metal and Concrete Structures and Components," and III.5, "Time-Dependent Degradation of Radiation Shielding Materials." If they do not meet the Section 3.5.1 criteria and are not included in the original design basis analysis, the applicant should demonstrate compliance with the applicable design standards and requirements.

IV.S1.2 Evaluation and Technical Basis

1. **Scope of Program:** The scope of the program includes visual inspection of all concrete surfaces of HSMs and VCCs (walls, roofs, slabs, and pads), including areas around anchor bolts and embedments. The program also includes supplemental destructive testing (e.g., petrographic examinations and chemical analyses) of sample material where degradation is indicated or suspected and samples can be taken without compromising structural integrity, as well as periodic sampling and testing of groundwater.

   For DCSSs with a roof and penetration in the roof (e.g., HSMs), this program monitors the structural integrity of the ceiling, air-outlet shielding blocks, and penetrations (drains, vents, etc.), and signs of water infiltration, cracks, ponding, and flashing degradation. The structural integrity of the concrete around anchorages is also monitored.

2. **Preventive Action:** The Concrete Structures Monitoring Program is primarily a condition-monitoring program. However, as a preventive action, the use of embedded aluminum components without protective insulating coating, in combination with steel embedded in concrete, should be avoided (Jana and Tepke 2010). Otherwise, an enhanced site-specific inspection program should be developed.

3. **Parameters Monitored or Inspected:** For each structure/aging effect combination, the specific parameters monitored or inspected depend on the particular concrete structure and structural component, or commodity. Parameters monitored or inspected are commensurate with industry codes, standards, and guidelines and should consider industry and site-specific operating experience. ACI 349.3R and ASCE 11-99 provide an acceptable basis for selection of parameters to be monitored or inspected for concrete structural elements.

   For concrete structures, parameters monitored include (1) cracking, loss of bond, and loss of material (spalling and scaling) due to corrosion of embedded steel, freeze-thaw, or aggressive chemical attack; (2) cracking due to expansion from reaction with aggregates or increased stress levels from soil settlement; (3) increase in porosity and permeability due to leaching of calcium hydroxide and carbonation or aggressive chemical attack [e.g., formation of stalactites in HSM ceilings due to ingress of rainwater from outlet air vents (Gellrich 2012); (4) reduction of concrete strength and modulus due to elevated temperature [>66°C (150°F) general; >93°C (200°F) local]; (5) reduction of foundation strength from cracking due to differential settlement and erosion of the porous concrete subfoundation; and (6) reduction of concrete anchor capacity due to freeze-thaw and other local concrete degradation.

   Groundwater chemistry (pH, chlorides, and sulfates) should be monitored quarterly to assess its potential to promote aggressive chemical attack on below-grade concrete structures. The monitoring period may be relaxed for non-aggressive conditions. However, if aggressive conditions are detected the monitoring period should be decreased and groundwater samples taken from below ground concrete structures (e.g., basemat) should be examined for evidence of calcium-containing corrosion products. If a site de-watering system is necessary for managing settlement and erosion of porous concrete sub-foundations, its continued functionality should be monitored. The site-specific concrete structures monitoring program should contain sufficient detail on parameters monitored or inspected to verify that this program attribute is satisfied.

4. **Detection of Aging Effects:** The accessible exterior surfaces of concrete structures and structural components are monitored under this program using periodic visual inspection of each structure/aging effect combination by a qualified inspector to ensure that aging degradation will be detected and quantified before there is loss of intended functions. The interior surfaces of concrete structures are inspected by remote means such as a video camera and/or fiber optic technology through the openings of the storage system, such as air inlets, air outlets, and access doors. However, the sensitivity and effectiveness of the technique should first be demonstrated on a site-specific basis. For example, the resolution of the remote inspection to detect signs of aging effects such as water infiltration, cracking, spalling, scaling, leaching, flashing degradation, etc., should be specified. Surfaces of concrete pads are inspected for indications of sliding of the vertical free-standing canister and overpack. Visual inspection of the exterior surfaces of DCSS structures should be performed at least annually (Virginia Electric and Power Company 2002; Calvert Cliffs Nuclear Power Plant 2010). The inspection intervals for the interior surfaces of DCSS structures and external surfaces subject to degradation due to freeze-thaw, as well as for groundwater quality, are based on the site-specific

environmental conditions. Inspector qualifications should be consistent with industry guidelines and standards. Qualifications of inspection and evaluation personnel specified in ACI 349.3R are acceptable for license renewal, as prescribed in 10 CFR 72.158.

For facilities with non-aggressive groundwater/soil (pH >5.5, chlorides <500 ppm, and sulfates <1500 ppm), the program recommends (a) evaluating the acceptability of inaccessible areas when conditions exist in accessible areas that could indicate the presence of, or result in, degradation in such inaccessible areas, and (b) examining representative samples of the exposed portions of the below-grade concrete, when excavated for some other reason.

Where visual inspections indicate possible degradation, sample material should be removed for follow-on destructive petrographic examinations and chemical analyses, provided such material can be removed without compromising structural integrity. This sampling and analyses should be performed according to the guidance provided in ASTM Standards C 823-12 and C 856.

5. **Monitoring and Trending:** For all structures and components important to safety, the relevant parameters are monitored in a manner sufficient to provide reasonable assurance that these structures and components are capable of fulfilling their intended functions. These parameters should be established to be commensurate with safety and, where practical, to take into account industry-wide operating experience. A baseline inspection of the concrete structures should be performed for trending purposes.

6. **Acceptance Criteria:** The Concrete Structures Monitoring Program calls for inspection results to be evaluated by qualified engineering personnel on the basis of acceptance criteria selected for each structure/aging effect to ensure that the need for corrective actions is identified before loss of intended functions occurs. These acceptance criteria are derived from design basis codes and standards that include ACI 349.3R, ACI 318, ASCE 11-99, American Society of Mechanical Engineers (ASME) Code, or the relevant AISC specifications, as applicable, and they consider industry and plant operating experience. The criteria are directed at the identification and evaluation of degradation that may affect the ability of the concrete structures to perform their intended functions. Applicants who are not committed to ACI 349.3R and elect to use site-specific criteria for concrete structures should describe the criteria and provide a technical basis for deviations from those in ACI 349.3R.

7. **Corrective Actions:** Evaluations are performed for any inspection results that do not satisfy established criteria. Corrective actions are initiated in accordance with the corrective-action process if the evaluation results indicate that there is a need for repair or replacement. The requirements of 10 CFR Part 72, Appendix G, are acceptable to address the corrective actions.

   Cracking in concrete has many possible causes. The root cause of the cracking should be evaluated to ensure that the condition of the concrete will not accelerate structural degradation during the requested period of extended operation. In concrete structures,

appropriate crack repair techniques depend upon understanding the causes of cracking and selecting appropriate repair procedures. Guidance on the causes of concrete cracking, crack evaluation, and repair of concrete structures is given in ACI 224.1R. Guidance on controlling the corrosion of embedded reinforcing steel and the repair and rehabilitation of concrete structures with corroded reinforcing steel is given in ACI 222R.

8. **Confirmation Process:** Site QA procedures, review and approval processes, and administrative controls are implemented according to the requirements of 10 CFR Part 72, Appendix G. As discussed in the appendix to this report, the requirements of 10 CFR Part 72, Appendix G, are acceptable to address the corrective actions, confirmation process, and administrative controls.

9. **Administrative Controls:** See element 8, above.

10. **Operating Experience:** Monitoring programs for concrete structures have been implemented for managing aging effects during the extended period of license renewal of the operating nuclear power plants. NUREG-1522 documents the results of a survey in 1992 to obtain information on the types of distress in the concrete structures and components, the types of repairs performed, and the durability of the repairs. Licensees who responded to the survey reported cracking, scaling, and leaching of concrete structures. The degradation was attributed to drying shrinkage, freeze-thaw, and abrasion. The degradation also included corrosion of anchor bolts and groundwater leakage and seepage. The degradations at coastal plants were more severe than those observed in inland plants as a result of contact with brackish water and seawater. The license renewal applicants reported similar degradation and corrective actions taken through their structures monitoring program. There is reasonable assurance that implementation of the Concrete Structures Monitoring Program described here will be effective in managing the aging of the in-scope concrete structures and components of used fuel DCSSs through the requested period of extended operation.

    A letter from TransNuclear submitted to the Nuclear Regulatory Commission (NRC), dated March 1, 2012 (TransNuclear 2012), identified five NUHOMS HSMs (INL/TMI-2, Millstone, Davis Besse, Oyster Creek, and Rancho Seco) as potentially susceptible to concrete cracks because of water entering through hole penetrations in the roof, which subsequently could undergo freeze/thaw cycles. In the INL/TMI-2 HSM (NRC 2011), the cracks due to freeze-thaw were repaired, the through-hole penetrations were filled with polyurethane foam to inhibit water intrusion, and each hole was covered with a stainless steel cap. In the Millstone HSM, cracking was observed around one through-thickness hole in the roof. The cracks were repaired, and the holes were sealed or grouted. The roof holes of Davis Besse, Oyster Creek, and Rancho Seco were grouted, and no cracks due to freeze-thaw have been observed. In addition, concrete stalactites due to dissolution of aggregate were observed on the ceilings of the HSMs at Calvert Cliffs with 15-20 years of service as a result of intrusion of rainwater into the HSM through the outlet vent stacks. Broken stalactite debris was observed on the surface of the heat shields beneath the ceiling. Stalactites are formed when water leaches calcium oxide (CaO) out of the concrete ceiling through hydrolysis to form soluble calcium hydroxide [$Ca(OH)_2$], which reacts with carbon dioxide (CO_2) in the air to form calcium carbonate ($CaCO_3$) stalactites on concrete surfaces. Water was observed to flow inward

along concrete surface cracks, though water had not penetrated to the rebar, and the pure white color of the stalactites was present on the concrete surface. Therefore, concrete leaching could also occur in these surface cracks.

On Aug. 23, 2011, the North Anna ISFSI suffered minor damage from a 5.8 magnitude earthquake (NRC 2010 and 2011). An evaluation of the response of the ISFSI to earthquake indicated:

(i) Twenty five of the twenty seven TN-32 casks slid up to 4.5 in. on the concrete pad during the quake. Six cask sets were closer than the 16-ft separation distance specified in the FSAR. There were no crack indications observed in the concrete pad or casks, no damage to the pressure monitors, and no pressure monitoring system alarms during or after the earthquake.

(ii) Some slight damage was identified in the TN-NUHOMS modules around the outlet vents and some surface cracking indications were noted. In addition, some modules showed gaps between them of approximately 1.5 in. versus the required 1.0 in. maximum gap.

Preliminary determination of the safety significance indicated that as expected, the casks withstood the earthquake at North Anna. The spent fuel continues to be surrounded by several tons of steel and concrete, and sealed in an inert He environment. Damage to concrete components appear to be cosmetic, and does not impact structural integrity or radiation shielding capability. Thermal performance measurements for all loaded casks found no abnormal temperature differences.

IV.S1.3 References

10 CFR Part 72, Appendix G, Quality Assurance Criteria for the Independent Storage of Spent Nuclear Fuel, High-Level Radioactive Waste, and Reactor Related Greater Than Class C Waste, Nuclear Regulatory Commission, 1–1–12 Edition, 2012.

10 CFR 72.122(b), Protection against Environmental Conditions and Natural Phenomena, Nuclear Regulatory Commission, 1–1–12 Edition, 2012.

10 CFR 72.122(f), Testing and Maintenance of Systems and Components, Nuclear Regulatory Commission, 1–1–12 Edition, 2012.

10 CFR 72.128, Criteria for Spent Fuel, High-Level Radioactive Waste, and Other Radioactive Waste Storage and Handling, Nuclear Regulatory Commission, 1–1–12 Edition, 2012.

10 CFR 72.158, Control of Special Processes, Nuclear Regulatory Commission, 1–1–12 Edition, 2012.

10 CFR 72.236, Specific Requirements for Spent Fuel Storage Cask Approval and Fabrication, Nuclear Regulatory Commission, 1–1–12 Edition, 2012.

ACI 222R, Protection of Metals in Concrete Against Corrosion, American Concrete Institute, Farmington Hills, MI, 2001.

ACI 224.1R, Causes, Evaluation, and Repair of Cracks in Concrete Structures, American Concrete Institute, Farmington Hills, MI, 2007.

ACI 318, Building Code Requirements for Reinforced Concrete and Commentary, American Concrete Institute, Farmington Hills, MI, 2008.

ACI 349.3R, Evaluation of Existing Nuclear Safety-Related Concrete Structures, American Concrete Institute, Farmington Hills, MI, 2002

ASCE 11–99, Guideline for Structural Condition Assessment of Existing Buildings, American Society of Civil Engineers, Reston, VA, 2000.

ASTM 823-12, Practice for Examination and Sampling of Hardened Concrete in Constructions, American Society for Testing and Materials, West Conshohocken, PA, 2012.

ASTM 856-13, Practice for Petrographic Examination of Hardened Concrete, American Society for Testing and Materials, West Conshohocken, PA, 2013.

Calvert Cliffs Nuclear Power Plant, Independent Spent Fuel Storage Installation Material License No. SNM–2505, Docket No. 72–8, Site-Specific Independent Spent Fuel Storage Installation (ISFSI) License Renewal Application, ADAMS ML102650247, September 2010.

Gellrich, G., Calvert Cliffs Nuclear Power Plant, letter to Nuclear Regulatory Commission, Response to Request for Supplemental Information, RE: Calvert Cliffs Independent Spent Fuel Storage Installation License Renewal Application (TAC No. L24475), ADAMS ML12212A216, July 27, 2012.

Jana, D. and Tepke, D., Corrosion of Aluminum Metal in Concrete – A Case Study, Proceedings of the 32nd Conference on Cement Microscopy, ICMA, New Orleans, Louisiana, March 2010. Retrieved from http://www.cmc-concrete.com/ publication link on February 28, 2013.

Lawler, J. S. and Krauss, P. D., Three Mile Island Facility CPP-1774 Structural Inspection of Horizontal Storage Modules and Pad, Wiss, Janney, Elstner Associates, Idaho Falls, ID, July 31, 2009.

NRC, North Anna Earthquake Summary, NRC Fact Sheets and Information, Nuclear Regulatory Commission, Washington, DC, Sept. 17, 2010.

NRC, North Anna Independent Spent Fuel Storage Installation Response to Earthquake, NRC Fact Sheets and Information, Nuclear Regulatory Commission, Washington, DC, Nov. 2011.

NRC, Three Mile Island Unit-2 ISFSI - NRC Inspection Report, Nuclear Regulatory Commission, Washington, DC, ADAMS ML11097A028, April 2011.

NUREG-1522, Assessment of Inservice Condition of Safety-Related Nuclear Power Plant Structures, Nuclear Regulatory Commission, Washington, DC, June 1995.

NUREG-1922, Computational Fluid Dynamics Analysis of Natural Circulation Flows in a Pressurized-Water Reactor Loop under Severe Accident Conditions, Nuclear Regulatory Commission, Washington, DC, Feb. 28, 2010.

TransNuclear, Inc., Identification of Sites Using Horizontal Storage Modules with Thru Hole Penetrations, ADAMS ML12065A184, March 1, 2012.

Virginia Electric and Power Company, Surry Independent Spent Fuel Storage Installation (ISFSI) License Renewal Application, Docket No. 72–2, April 29, 2002.

Page intentionally blank

IV.S2 Monitoring of Protective Coatings on Carbon Steel Structures

IV.S2.1 Program Description

The objective of the program is to manage the effects of aging on the protective coating on carbon steel structures used in dry cask storage systems. The program consists of implementation of the American Society for Testing and Materials (ASTM) D7167–05 guidelines and additional information in EPRI 1019157 ["Guidelines on Nuclear Safety-related Coatings, Revision 2 (Formerly TR-109937 and 1003102)"] for establishing procedures for monitoring the performance of Service Level III coatings in nuclear power plants.

Protective coatings are used in various designs of used fuel dry storage systems for corrosion protection and in some cases to facilitate decontamination. For example, the exterior surface of most dry cask storage system (DCSS) overpacks is coated with some weather resistant coating such as epoxy resin. The internal cavity of direct loaded carbon steel casks (e.g., TN-32, TN-40, or TN-68, CASTOR V/21 or X/33, MC-10, or NAC-C28 S/T or NAC-I28 S/T) is coated either with galvanically applied Ni or Ni-base alloy or thermally sprayed Al. For carbon or low-alloy steel canisters (e.g., VSC-24, or W150 systems), the surfaces are also coated with Ni or Al for corrosion protection. Similarly, the inner surface of carbon steel liner in overpack of air-cooled systems is protected with temperature- and radiation-resistant coating.

These coating are classified as Service Level II or III coatings as defined by ASTM Committee D-33 and described in NRC RG-1.54, Rev. 2. Service Level II coatings are used in areas where coating failure could impair, but not prevent, normal operating performance. The functions of Service Level II coatings are to provide corrosion protection and decontaminability in those areas outside the reactor containment that are subject to radiation exposure and radionuclide contamination. Service Level III coatings are used in areas outside the reactor containment where failure could adversely affect the safety function of a safety-related SSC. Service Level III coatings are safety related but Service Level II coating are not.

Proper maintenance of protective coatings on the external surfaces of carbon steel overpack structures exposed to outdoor air is essential to provide protection to the exposed metal surfaces of the Independent Spent Fuel Storage Installation (ISFSI) overpack. Therefore, most of the coatings used in DCSSs (e.g., coatings on the external surfaces of DCSS overpacks) would be considered as Service Level II coatings. However, for air-cooled systems, debris from degraded coatings on the steel liner inside the overpack could clog the annulus between the canister and the overpack, thereby reducing airflow through the system. Such clogging could significantly reduce the heat transfer capacity of the system and cause an unacceptable increase in temperature of the confinement and adversely affect the function of the overpack. For this reason, the coatings for the ISFSI overpack liner may be treated as Service Level III coatings.

Maintenance of coatings applied to carbon steel surfaces of the overpack liner and the canister, prevents or minimizes loss of material due to corrosion of carbon steel components. ASTM D5144-08 provides guidance for application and maintenance of protective coatings. Regulatory Position C4 in NRC RG 1.54, Rev. 2, states that ASTM D 7167–05 provides guidelines that the Nuclear Regulatory Commission (NRC) staff finds acceptable for establishing procedures to monitor the performance of Service Level III coatings in nuclear power plant applications. These same guidelines may be applied

to Service Level III coatings in ISFSI applications as a part of an aging management program (AMP) for these coatings. EPRI 1019157 provides additional information on the ASTM Standard guidelines.

There are no specific testing or qualification requirements included in ASTM D5144-08 for Service Level II coatings. The guidance in Section 4.5 "Coatings Service Level II Coatings" of D5144-08 may be used for specifying, inspecting, and evaluating Service Level II coatings as defined by ASTM Committee D-33 and described in NRC RG-1.54, Rev. 2.

IV.S2.1.1 Program Interface

The aging effects of loss of material due to corrosion and wear and to cracking of ventilation system components are managed under the AMP in Section IV.M1, "External Surfaces Monitoring of Mechanical Components."

IV.S2.2 Evaluation and Technical Basis

1. ***Scope of Program:*** The scope of this program includes coatings applied to steel surfaces of the overpack that are exposed to the outside environment. It also includes any other coatings that are credited by the licensee for preventing loss of material due to corrosion.

2. ***Preventive Action:*** The program is a condition-monitoring program and does not recommend any preventive actions. However, for applicants that credit coatings for minimizing loss of material, maintenance of these coatings constitutes a preventive action.

3. ***Parameters Monitored or Inspected:*** For components with coatings, coating deterioration is an indicator or precursor of possible underlying degradation. ASTM D 7167–05 provides guidelines for establishing procedures to monitor the performance of Service Level III coatings. It also refers to other ASTM standards, such as test methods for estimating dry film thickness and adhesion strength of coatings that are determined to be deficient or degraded, which may be used, as appropriate, for monitoring the performance of ISFSI overpack coatings.

4. ***Detection of Aging Effects:*** For coated surfaces, confirmation of the integrity of the paint or coating is an effective method for managing the effects of corrosion on the metallic surface. For metallic components under a protective cover, confirmation of the absence of any leakage of rainwater is an effective method for managing corrosion of the metallic components under the coating. ASTM D 7167–05, Paragraph 6, provides guidelines for determining the inspection frequency of the coatings on the ISFSI overpack, and Paragraph 10 provides guidelines for developing an inspection plan and selecting the test methods to be used. Subparagraph 10.2 states, "Condition assessment shall include a visual inspection of the designated lined surfaces to identify defects, such as blistering, cracking, flaking/peeling/delamination, rusting, and physical damage." Field documentation of inspection results is addressed in Subparagraph 10.3 and Paragraph 11.

5. ***Monitoring and Trending:*** Subparagraph 7.2 of ASTM D 7167–05 identifies monitoring and trending activities and specifies a pre-inspection review of the previous two or more monitoring reports. Paragraph 12 specifies that the inspection report should prioritize repair areas as needing either immediate repair or repair at a later date, and should state that they are under surveillance in the interim period.

6. ***Acceptance Criteria:*** ASTM D 7167–05, Subparagraphs 10.2.1 through 10.2.6, 10.3, and 10.4, contain one acceptable method for the characterization, documentation, and testing of defective or deficient coating surfaces that exhibit blistering, cracking, flaking, peeling, delamination, and rusting. Paragraph 12 addresses evaluation and specifies that the inspection report is to be evaluated by the responsible evaluation personnel, who prepare a summary of findings and recommendations for future surveillance or repair, including an analysis of reasons or suspected reasons for failure. Areas requiring repair work are prioritized as major or minor defective areas. Additional ASTM standards and other recognized test methods are available for use in characterizing the severity of observed defects and deficiencies.

7. ***Corrective Actions:*** A site-specific corrective action plan should be defined for timely repair of major defective areas. As discussed in Appendix A to this report, the requirements of 10 CFR Part 72, Appendix G, are acceptable to address the corrective actions.

8. ***Confirmation Process:*** Site QA procedures, review and approval processes, and administrative controls are implemented according to the requirements of 10 CFR Part 72, Subpart G. As discussed in Appendix A to this report, the requirements of 10 CFR Part 72, Subpart G, are acceptable to address the confirmation process and administrative controls.

9. ***Administrative Controls:*** See element 8 above.

10. ***Operating Experience:*** Operating experience with Service Level III coatings on ISFSI overpack is limited. However, the experience with Service Level I coatings at nuclear power plants can provide some useful insight. NRC IN 88–82, NRC IN 97–13, NRC Bulletin 96–03, NRC GL 2004–02, and NRC GL 98–04 describe industry experience pertaining to coatings degradation inside nuclear power plant containments and the consequential potential clogging of sump strainers. NRC RG 1.54, Rev. 2, was issued in 2010. Monitoring and maintenance of Service Level III coatings conducted in accordance with RG 1.54 Regulatory Position C4 is considered to be an effective program for managing degradation of Service Level III coatings on ISFSI overpacks.

IV.S2.3 References

10 CFR Part 72, Appendix G, Quality Assurance Criteria for the Independent Storage of Spent Nuclear Fuel, High-Level Radioactive Waste, and Reactor Related Greater Than Class C Waste, Nuclear Regulatory Commission, 1–1–12 Edition, 2012.

ASTM D 5144–08, Standard Guide for Use of Protective Coating Standards in Nuclear Power Plants, American Society for Testing and Materials, West Conshohocken, PA, 2005.

ASTM D 7167–05, Standard Guide for Establishing Procedures to Monitor the Performance of Safety-Related Coating Service Level III Lining Systems in an Operating Nuclear Power Plant, American Society for Testing and Materials, West Conshohocken, PA, 2005.

EPRI 1019157, Guideline on Nuclear Safety-Related Coatings, Revision 2 (formerly TR-109937 and 1003102), Electric Power Research Institute, Palo Alto, CA, December 2009.

NRC Bulletin 96–03, Potential Plugging of Emergency Core Cooling Suction Strainers by Debris in Boiling-Water Reactors, Nuclear Regulatory Commission, Washington, DC, May 6, 1996.

NRC GL 98–04, Potential for Degradation of the Emergency Core Cooling System and the Containment Spray System After a Loss-Of-Coolant Accident Because of Construction and Protective Coating Deficiencies and Foreign Material in Containment, Generic Letter, Nuclear Regulatory Commission, Washington, DC, 1998.

NRC GL 2004–02, Potential Impact of Debris Blockage on Emergency Recirculation during Design Basis Accidents at Pressurized-Water Reactors, Generic Letter, Nuclear Regulatory Commission, Washington, DC, September 13, 2004.

NRC IN 88–82, Torus Shells with Corrosion and Degraded Coatings in BWR Containments, Information Notice, Nuclear Regulatory Commission, Washington, DC, November 14, 1988.

NRC IN 97–13, Deficient Conditions Associated With Protective Coatings at Nuclear Power Plants, Information Notice, Nuclear Regulatory Commission, Washington, DC, March 24, 1997.

NRC RG 1.54, Rev. 2, Service Level I, II, and III Protective Coatings Applied to Nuclear Power Plants, Regulatory Guide, Nuclear Regulatory Commission, Washington, DC, October 2010.

IV.M1 External Surfaces Monitoring of Mechanical Components

IV.M1.1 Program Description

The objective of this program is to manage the aging effects on the external surfaces of metallic and polymeric components such as used-fuel dry cask storage system (DCSS) overpacks, metal liners for vertical concrete casks, heat shields, used-fuel assembly canisters or casks, support structures, bolting, access doors, vents, and other components important to safety that require aging management during the requested period of extended operation. The aging effects for metallic components include loss of material due to general, pitting, and crevice corrosion and wear; cracking due to stress corrosion cracking (SCC) or fatigue; and loss of preload due to stress relaxation. The aging effects for polymeric components include loss of sealing capacity due to loss of material, cracking, shrinkage, or hardening from weathering of polyurethane foam elastomer, rubber, and other similar materials due to temperature and radiation as evidenced by crazing, scuffing, cracking, dimensional and color changes, or loss of suppleness. The program consists of periodic visual inspections of external surfaces of components for evidence of aging effects such as loss of material, cracking, and loss of preload for bolting, and shrinkage, hardening, dimensional and color changes, and loss of suppleness for polymeric materials. Inspection of surfaces in narrow spaces or annuli and in areas with limited access may be performed using a camera and/or fiber optic technology introduced through the openings of the storage system, such as air inlet/outlet vents or access doors. However, the sensitivity and effectiveness of the technique should be first demonstrated on a site-specific basis.

Most vertical casks are free-standing. For casks located in areas with frequent seismic events, vertical casks such as the HI-STORM 100A design are equipped with sector lugs to anchor them to the foundation pad to prevent sliding and tip-over of the cask. The anchor studs are preloaded to produce a compressive load at the storage system/foundation pad interface, which generates a large frictional force at the interface that resists the sliding force exerted on the cask during seismic events. Structural bolting, foundation pad anchors, and all other bolting within the scope of license renewal are monitored in this program to ensure that no unacceptable degradation of bolting such as loss of preload or SCC has occurred. The External Surfaces Monitoring of Mechanical Components Program also includes preventive actions delineated in NUREG-1339 and EPRI NP-5067 for bolting.

The aging degradation effects on lightning rods and associated mounting structures and ground connections due to wear, corrosion, or weathering are managed in accordance with the guidance of NFPA-780, or a licensee's existing program that is comparable to the guidance of NFPA-780, to ensure the continuity of intended function.

IV.M1.1.1 Program Interfaces

The aging degradation effects on the concrete structures, including the foundation pads, are managed by the aging management program (AMP) in Section IV.S1, "Concrete Structures Monitoring Program." The aging degradation effects on protective coatings on the external surfaces of carbon steel structures are managed by the AMP in Section IV.S2, "Monitoring of Protective Coating on Carbon Steel Structures." The aging degradation effects on the ventilation systems of Independent Spent Fuel Storage Installations (ISFSIs), including blockage, are managed by the AMP in Section IV.M2, "Ventilation System Surveillance Program." Furthermore, the design of DCSS overpack structures or canister support structures includes a fatigue analysis for either high-cycle

fatigue or thermal fatigue, and a time-limited aging analysis (TLAA) for loss of material due to corrosion. If these analyses meet the five criteria in Section 3.5.1 of NUREG-1927, their validity should be verified for the requested period of extended operation in accordance with the TLAAs described in Sections III.2, "Fatigue of Metal and Concrete Structures and Components," and III.3, "Corrosion Analysis of Metal Components." If they do not meet the Section 3.5.1 criteria and are not included in the original design basis analysis, the applicant should demonstrate compliance with the applicable design standards and requirements.

IV.M1.2 Evaluation and Technical Basis

1. ***Scope of Program:*** This program visually inspects and monitors the external surfaces of mechanical components in used-fuel DCSSs that are subject to loss of materials, cracking, change in mechanical properties, and weathering or degradation due to ingress of water, from rain or nearby sources such as cooling towers, into the DCSSs. The program scope includes surfaces of metallic components such as used-fuel overpacks, metal liners for vertical concrete casks, heat shields, used-fuel assembly canisters, support structures, bolting, access doors, vents, and other components that are within the scope of the license renewal. In addition, this program visually inspects and monitors the external surfaces of sealing materials (polyurethane foam or other materials) and through-hole penetration covers in DCSS walls and roof (e.g., stainless steel cap), seismic anchoring bolts and all other structural bolting, moisture barriers, and caulking and sealing materials that prevent water and moisture from entering the DCSSs. Cracking of steel components exposed to periodic or intermittent wetting, particularly in the presence of chlorides or sulfates, is also managed under this program. An exception is the seal weld regions in welded canisters, which are managed under the AMP in Section IV.M3, "Welded Canister Seal and Leakage Monitoring Program."

   The program also includes lightning protection system components such as lightning rods and associated mounting structures and ground connections.

2. ***Preventive Actions:*** The program is primarily a condition-monitoring program. However, the program includes preventive actions delineated in NUREG-1339 and EPRI NP-5769 to ensure structural bolting integrity. These actions emphasize proper selection of bolting material, lubricants, and installation torque or tension to prevent or minimize loss of bolting preload and cracking of high-strength bolting. If the structural bolting consists of ASTM A325, ASTM F1852, and/or ASTM A490 bolts, the preventive actions for storage, lubricants, and SCC potential discussed in Section 2 of the RCSC (Research Council for Structural Connections) publication "Specification for Structural Joints Using ASTM A325 or A490 Bolts" (RCSC 2004) should be used.

3. ***Parameters Monitored or Inspected:*** The program provides visual inspections to monitor for material degradation of the DCSS overpacks, canisters, and other mechanical components. Inspection can reveal cracking due to SCC or fatigue; loss of material due to corrosion; and indications of degradation due to wear, such as verification of clearances, settings, loose or missing parts, debris, loss of integrity at bolted or welded connections, or indication of rainwater leakage.

   Examples of inspection parameters for metallic components include the following:

- Corrosion and material wastage (loss of material);
- Corrosion stains on adjacent components and structures (loss of material);
- Surface cracks (cracking); and
- Stains caused by leaking rainwater.

Examples of inspection parameters for polymeric components include the following:

- Surface cracking, crazing, scuffing, and dimensional change (ballooning and necking);
- Discoloration;
- Hardening, as evidenced by a loss of suppleness during manipulation where the component and material are amenable to manipulation; and
- Exposure of internal reinforcement for reinforced elastomers.

Structural bolting is monitored for loss of preload due to self-loosening, missing or loose nuts, and conditions indicative of loss of preload. High-strength (actual measured yield strength ≥150 ksi or 1,034 MPa) structural bolts greater than 1 in. (25 mm) in diameter are monitored for SCC. Other structural bolting (ASTM A-325, ASTM F1852, and ASTM A490 bolts) and anchor bolts are monitored for loss of material and loose or missing nuts.

The lightning protection system is monitored periodically, in accordance with the guidelines of NFPA-780 or the licensee's existing program, to ascertain that corrosion or weathering has not (a) caused degradation of any component of the system, such as lightning rods and associated mounting structures and ground connections, or (b) resulted in high resistance of joints.

4. ***Detection of Aging Effects:*** Using visual inspection, this program manages the aging effects of loss of material due to corrosion, cracking due to SCC or cyclic load, and changes in properties of sealing materials due to temperature and radiation. The visual inspections of component external surfaces are performed by approved site-specific procedures and personnel qualification standards. These inspections should be performed at a frequency of at least once in 20 years (NUREG-1927). More-frequent inspections are required for bolting and polymeric components. These inspection intervals should be based upon site-specific service condition, and should be capable of detecting age-related degradation, such as loss of material due to corrosion, and cracking of metallic components and welds. Remote inspection using a camera and/or fiber optic technology, introduced through openings such as air inlets and outlets, is acceptable. Where possible, access doors or environmental covers should be removed for inspection of the canister and support structure for signs of aging degradation.

   The visual inspection should be capable of identifying indirect indicators of flexible-polymer hardening and loss of strength as evidenced by surface cracking, crazing, discoloration, and for elastomers with internal reinforcement, the exposure of reinforcing fibers, mesh, or underlying metal. Visual inspection should cover

100 percent of the accessible component surfaces. Visual inspection will identify direct indicators of loss of material due to wear, dimensional change, scuffing, and for flexible polymeric materials with internal reinforcement, the exposure of reinforcing fibers, mesh, or underlying metal. Manual or physical manipulation can be used to augment visual inspection to confirm the absence of hardening and loss of strength for flexible polymeric materials where appropriate. For flexible polymeric materials, hardening and loss of strength or material due to wear are expected to be detectable prior to any loss of intended function.

Inspection of lightning rods, mounting structures, and ground connections is conducted to verify that the lightning protection system is fully functional. Inspection results are considered acceptable if there is no apparent damage to these components. Any degradation observed during inspections is evaluated for additional actions as part of the licensee's corrective-action program. Section D.1.1.2 of NFPA-780 recommends that lightning protection systems be visually inspected at least annually and complete in-depth inspections conducted every 3 to 5 years.

5. ***Monitoring and Trending:*** Visual inspections are performed at intervals not to exceed 20 years (NUREG-1927). The inspections are to be performed by qualified personnel using qualified procedures in accordance with applicable codes, standards, specifications, criteria, and other special requirements, as specified in 10 CFR 72.158. Standardized monitoring and trending activities are used to track degradation, such as performing a baseline inspection for subsequent trending.

6. ***Acceptance Criteria:*** For each component/aging-effect combination, the acceptance criteria are defined to ensure that the need for corrective actions will be identified before loss of intended functions. For examinations performed in accordance with ASME Code Section XI, the acceptance criteria of Subsection IWB-3500 apply. Any indications of degradation exceeding the component design specifications should be evaluated for continued service in the corrective-action program. For example, for carbon steel components, general and pitting corrosion, galvanic corrosion, or microbiologically induced corrosion (MIC) that does not meet the design specifications is not acceptable for continued service. For stainless steels components, no surface discoloration is expected; the appearance of discoloration may indicate corrosive attack on the surface. For aluminum and copper alloy components exposed to marine or industrial environments, any indications of relevant degradation that could impact their intended function are evaluated. Loose bolts and nuts and cracked high-strength bolts are not acceptable. Based on the results of visual examination, if additional uncertainties exist and the condition of the canister/cask cannot be verified as acceptable, the surfaces of the canister/cask would require cleaning and volumetric examination, as necessary. Such site-specific enhanced inspections should be developed.

   For flexible polymers, a uniform surface texture and uniform color with no unanticipated dimensional change are expected. Any abnormal surface condition may be an indication of an aging effect for metals and for polymers. For these materials, changes in physical properties (e.g., the hardness, flexibility, physical dimensions, and color of the material relative to when the material was new) should be evaluated for

continued service in the corrective-action program. Cracks should be absent within the material. For rigid polymers, surface changes affecting performance, such as erosion, cracking, crazing, checking, and chalking, are subject to further investigation. Acceptance criteria include design standards, plant procedural requirements, licensing basis, industry codes or standards, and engineering evaluation.

Structural sealants are acceptable if the observed loss of material, cracking, and hardening will not result in loss of sealing. The acceptance criteria for visual inspection of the lightning system are in accordance with NFPA-780 or the licensee's existing program.

7. ***Corrective Actions**:* Site QA procedures, review and approval processes, and administrative controls are implemented according to the requirements of 10 CFR Part 72, Appendix G. As discussed in Appendix A to this report, the requirements of 10 CFR Part 72, Subpart G, are acceptable to address the corrective actions, confirmation process, and administrative controls.

8. ***Confirmation Process:*** See element 7, above.

9. ***Administrative Controls:*** See element 7, above.

10. ***Operating Experience:*** External surface inspections as a part of system inspections have been, in effect, at many nuclear utilities since the mid-1990s in support of the maintenance rule (10 CFR 50.65) and have proven effective in maintaining the material condition of plant systems. The elements that comprise these inspections (e.g., the scope of the inspections and inspection techniques) are consistent with industry practice.

    The inspection report for the Calvert Cliffs ISFSI (Gellrich 2012) provides an indication of the capabilities and limitations of visual inspection techniques for evaluating the condition of ISFSI components. Calvert Cliffs performed an inspection of the interior of two horizontal storage modules (HSMs) and the exterior of the dry shielded canisters (DSCs) they contained. The visual inspection was conducted using a remote-controlled, high-definition pan-tilt-zoom camera system with a 100-mm (3.94 in.) head. A remote inspection was performed by lowering the camera through the rear outlet vent, which allowed for viewing of the majority portion of the DSC, its support structure, and the interior surfaces of the HSM. A direct inspection was performed through the partially open door by mounting the camera on a pole. This allowed for views of the bottom end of the DSC, the seismic restraint, the HSM doorway opening, and the back side of the HSM door. The resolution of the images obtained was not stated. On the upper shell of both casks**,** a thick coat of dust and small clumps of unknown material were observed. Near the outlet vent, there was evidence of water coming in contact with the DSC, apparently from wind-driven rainwater entering the module via the rear outlet vent. The center circumferential weld and longitudinal welds were found to be in good condition, but the bottom shield plug circumferential weld was not accessible. A few small surface rust spots were noted on the DSC shell base metal, and this rust was attributed to contamination with free iron during fabrication or handling prior to placement of the DSC in service.

IV.M1.3 References

10 CFR 50.65, Requirements for Monitoring the Effectiveness of Maintenance at Nuclear Power Plants, Nuclear Regulatory Commission, 1–1–12 Edition 2012.

10 CFR Part 72, Appendix G, Quality Assurance Criteria for the Independent Storage of Spent Nuclear Fuel, High-Level Radioactive Waste, and Reactor Related Greater Than Class C Waste, Nuclear Regulatory Commission, 1–1–12 Edition 2012.

10 CFR 72.158, Control of Special Processes, Nuclear Regulatory Commission, 1–1–12 Edition 2012.

ASME Boiler and Pressure Vessel Code, Section XI, Inservice Inspection of Nuclear Power Plant Components, American Society of Mechanical Engineers, New York, 2004.

ASTM A 325, Standard Specification for Structural Bolts, Steel, Heat Treated, 120/105 ksi Minimum Tensile Strength, American Society for Testing and Materials, West Conshohocken, PA.

ASTM A 490, Standard Specification for Structural Bolts, Alloy Steel, Heat Treated, 150 ksi Minimum Tensile Strength, American Society for Testing and Materials, West Conshohocken, PA.

ASTM F 1852, Standard Specification for "Twist Off" Type Tension Control Structural Bolt/Nut/Washer Assemblies, Steel, Heat Treated, 120/105 ksi Minimum Tensile Strength, American Society for Testing and Materials, West Conshohocken, PA.

EPRI NP-5067, Good Bolting Practices, A Reference Manual for Nuclear Power Plant Maintenance Personnel, Electric Power Research Institute, Palo Alto, CA, Volume 1: "Large Bolt Manual," 1987, and Volume 2: "Small Bolts and Threaded Fasteners," 1990.

EPRI NP-5769, Degradation and Failure of Bolting in Nuclear Power Plants, Volumes 1 and 2, Electric Power Research Institute, Palo Alto, CA, April 1988.

Gellrich, G., Calvert Cliffs Nuclear Power Plant, letter to U.S. Nuclear Regulatory Commission, Response to Request for Supplemental Information, RE: Calvert Cliffs Independent Spent Fuel Storage Installation License Renewal Application (TAC No.-L24475), ADAMS ML12212A216, July 27, 2012.

NFPA-780, Standard for the Installation of Lightning Protection Systems, National Fire Protection Association, Quincy, MA, August 5, 2004.

NUREG-1339, Resolution of Generic Safety Issue 29: Bolting Degradation or Failure in Nuclear Power Plants, Nuclear Regulatory Commission, Washington, DC, June 1990.

NUREG-1927, Rev. 1, Standard Review Plan for Renewal of Spent Fuel Dry Cask Storage System Licenses and Certificates of Compliance, Nuclear Regulatory Commission, Washington, DC, March 2011.

RCSC (Research Council on Structural Connections), Specification for Structural Joints Using ASTM A325 or A490 Bolts, Chicago, IL, 2004.

IV.M2 Ventilation System Surveillance Program

IV.M2.1 Program Description

The objective of this program is to manage the loss of cooling capabilities of the passive ventilation systems of the dry cask storage system (DCSS) designs due to obstructions. The Ventilation System Surveillance Program is based on temperature monitoring of the system inlet and outlet air and/or system inspections and walkdowns.

The design criteria contained in the DCSS final Safety Analysis Report establish the design, fabrication, construction, testing, maintenance, and performance requirements for structures, systems, and components important to safety. The criteria for used-fuel storage and handling in 10 CFR 72.128(a) specify that the storage facilities must be designed to ensure adequate safety under normal and accident conditions, and must include, among other things, a heat-removal capability having testability and reliability consistent with its importance to safety. Furthermore, the specific requirements in 10 CFR 72.236(f) specify that the spent-fuel storage cask must be designed to provide adequate heat removal capacity without active cooling systems. In addition, 10 CFR 72.122 requirements specify that spent-fuel cladding must be protected during storage against degradation that leads to gross rupture, or the fuel must be otherwise confined such that its degradation during storage will not pose operational safety problems with respect to its removal from storage. It is also well established that maintaining the cladding temperature below a prescribed limit is important for preventing and/or minimizing cladding embrittlement due to radial hydride formation during drying, transfer, and early stages of storage (Billone et al. 2011, 2012, and 2013). The possibility of hydride reprecipitation diminishes only after the cladding temperature has dropped below 200°C because of the decrease of fission-product decay heat during prolonged cooling, which may occur 20–25 years after the high-burnup used-fuel assemblies are placed in dry storage. Therefore, adequate heat-removal capacity of the dry storage system is important to maintain the configuration of the used fuel in the dry canister/cask and ensure retrievability of the used fuel and its transportability after extended long-term storage.

This program consists of daily visual inspections of various components of the ventilation systems, including air inlets, air outlets, and related components such as vent screens. The program manages aging effects through visual inspection of external surfaces of the ventilation system to ensure that the air inlets and outlets are intact and free from blockage. As an alternative, the temperature of air flowing through the DCSS is monitored continuously to detect if there are any anomalous change in air temperature (e.g., increase in outlet temperature) indicating potential blockage of airflow through the system. Visual inspections of the ventilation system are performed when temperature changes are observed or there is a natural phenomenon event such as a snowstorm.

IV.M2.1.1 Program Interfaces

The aging effects of loss of material due to corrosion and wear, and cracking of ventilation system components are managed under the aging management program (AMP) in Section IV.M1, “External Surfaces Monitoring of Mechanical Components.” The aging degradation of protective coatings on the external surfaces of the ventilation system components (e.g., cracking, flaking, and blistering) is managed by the AMP in Section IV.S2, “Monitoring of Protective Coatings on Carbon Steel Structures.”

IV.M2.2 Evaluation and Technical Basis

1. ***Scope of Program:*** The program visually inspects and monitors the external surfaces of the components in the ventilation system, such as air inlets and outlets and other components, to ensure they are free from blockage. The inspection covers all accessible external surfaces of all the storage units at a site. As an alternative, the program continuously monitors the temperatures at the inlet and outlet vents of all storage systems to detect anomalous changes in the system temperature. Visual inspections of the ventilation system are performed when temperature changes are observed or there is a natural phenomenon such as snowstorm.

2. ***Preventive Actions:*** The continuous monitoring of temperatures at the inlet and outlet vents or daily visual inspections and walkdowns verify that the inlet and outlet vents are free from obstruction and other aging effects, thereby ensuring that temperatures do not exceed the maximum allowable values defined in the facility's technical specifications. This measure prevents thermally induced damage to concrete components and overheating of the canister and fuel cladding.

3. ***Parameters Monitored or Inspected:*** The Ventilation System Surveillance Program utilizes continuous temperature monitoring of the inlet and outlet vents or daily system inspections and walkdowns to monitor blockage of the ventilation system.

   To ensure that the temperature monitoring devices will remain accurate during long-term storage at the ISFSI, the electronic circuitry associated with the temperature monitoring devices should be periodically calibrated in accordance with plant quality assurance (QA) requirements, as specified in 10 CFR 72.44(c)(3)(ii). In addition, the calibration data are periodically evaluated to identify anomalous trends that could indicate degraded instrumentation or degradation in ventilation system. All external components in the temperature measurement devices should be periodically inspected and calibrated to ensure that no degradation due to corrosion, wear, or cracking has occurred.

4. ***Detection of Aging Effects:*** Using air vent temperature monitoring and/or visual inspections of the ventilation system, the program manages aging effects, including reduction of heat transfer capability due to blockage of air inlet and outlet openings.

   Visual inspections should be conducted daily and be capable of detecting blockage to ensure that the cooling capability of the ventilation system is maintained. Inspection frequencies other than daily should be justified to ensure that elevated temperatures are not occurring within the inspection period, thereby causing damage to concrete components and overheating of the canister and fuel cladding.

   The inlet and outlet air temperatures are monitored continuously for each DCSS. To ensure that the temperature monitoring devices will remain accurate during long-term storage, the devices should be periodically calibrated in accordance with plant quality assurance (QA) requirements.

5. ***Monitoring and Trending:*** Visual inspections are performed daily, except as noted in program element 4 above, and associated personnel are qualified in accordance with site-controlled procedures and processes as prescribed in 10 CFR 72.158. Deficiencies are documented by approved processes and procedures, such that results can be trended.

   The temperature measurement data should be compared to baseline or predicted data trends and appropriate actions should be taken if any abnormal readings are noted. A review of temperature trends should detect an instrument problem before there is an actual temperature problem involving blockage of the ventilation system.

6. ***Acceptance Criteria:*** For each component/aging-effect combination, the acceptance criteria are defined to ensure that the need for corrective actions will be identified before loss of intended functions. Any indications of relevant degradation detected should be evaluated for continued service in the corrective-action program.

7. ***Corrective Actions:*** Site QA procedures, review and approval processes, and administrative controls are implemented according to the requirements of 10 CFR Part 72, Subpart G. As discussed in Appendix A to this report, the requirements of 10 CFR Part 72, Appendix G, are acceptable to address the corrective actions, confirmation process, and administrative controls.

8. ***Confirmation Process***: See element 7, above.

9. ***Administrative Controls***: See element 7, above.

10. ***Operating Experience:*** Visual inspections of the ventilation systems by means of system inspections and walkdowns or temperature measurements of the inlet and outlet air have been in effect at ISFSIs and have been proven effective in maintaining the cooling capabilities of the DCSS designs with ventilation systems (Duke Energy LLC 2008).

IV.M2.3 References

10 CFR Part 72, Appendix G, Quality Assurance Criteria for the Independent Storage of Spent Nuclear Fuel, High-Level Radioactive Waste, and Reactor Related Greater Than Class C Waste, Nuclear Regulatory Commission, 1–1–12 Edition, 2012.

10 CFR 72.44, License Conditions, Nuclear Regulatory Commission, 1–1–12 Edition, 2012.

10 CFR 72.122, Overall Requirements, Nuclear Regulatory Commission, 1–1–12 Edition, 2012.

10 CFR 72.128, Criteria for Spent Fuel, High-Level Radioactive Waste, and Other Radioactive Waste Storage and Handling, Nuclear Regulatory Commission, 1–1–12 Edition, 2012.

10 CFR 72.158, Control of Special Processes, Nuclear Regulatory Commission, 1–1–12 Edition, 2012.

10 CFR 72.236, Specific Requirements for Spent Fuel Storage Cask Approval and Fabrication, Nuclear Regulatory Commission, 1–1–12 Edition, 2012.

Billone, M.C., Burtseva, T.A., Dobrzynski, J.P., McGann, D.P., Byrne, K., Han, Z., and Liu, Y.Y., Phase I Ring Compression Testing of High-Burnup Cladding, FCRD-USED-2012–000039, December 31, 2011.

Billone, M.C., Burtseva, T.A., and Liu, Y.Y., Baseline Studies for Ring Compression Testing of High-Burnup Fuel Cladding, FCRD-USED-2013–000040 (ANL 12/58), Nov. 23, 2012.

Billone, M.C., Burtseva, T.A., and Einziger, R.E., Ductile-to-Brittle Transition Temperature for High-Burnup Cladding Alloys Exposed to Simulated Drying-Storage Conditions, J. Nucl. Mater. 433: 431–448 (2013).

Duke Energy LLC, Oconee Nuclear Station Site-Specific Independent Spent Fuel Storage Installation Application for Renewed Site-Specific Material License, ADAMS ML081280084, January 30, 2008.

IV.M3 Welded Canister Seal and Leakage Monitoring Program

IV.M3.1 Program Description

The objective of this program is to manage the aging effects on the integrity of the confinement boundary of welded used-fuel storage canisters for NUHOMS, HI-STORM, HI-STAR, NAC-MPC, NAC–UMS, VSC-24 and W-150 systems. The aging effects include cracking due to stress corrosion or fatigue/cyclic loading, loss of material due to general corrosion or pitting, or other aging degradation processes that occur during exposure to moisture and aggressive chemicals in the environment (e.g., marine environment). The program is credited for a site-specific assessment of the used-fuel storage canisters to establish (a) the material and fabrication conditions, (b) the stress state, and (c) the environmental conditions, such as temperature and deposits (e.g., chlorides) on the surface of the used-fuel canister welds. An acceptable site-specific program to manage the effects of cracking or leakage is then developed and implemented on the basis of the material, stress, and environmental conditions. However, because of the limited accessibility of the weld surface, managing the effects of cracking by inspection may not be practical for most dry cask storage system (DCSS) designs without the additional effort of retrieving the canister from the storage module or overpack. An alternative activity to inspection relies on monitoring of leakage to ensure timely detection of a potential breach of the canister confinement boundary to prevent degradation of the contents of the storage canisters.

One of the safety objectives of used-fuel DCSSs is to ensure that there is adequate confinement of the used fuel under all credible conditions of storage. Code of Federal Regulations 10 CFR 72.236(l) requires that the DCSSs be evaluated to ensure that the confinement of the radioactive material is reasonably maintained under normal, off-normal, and credible accident conditions. Furthermore, 10 CFR 72.122(h)(5) requires that the used fuel be packaged in a manner that allows handling and retrievability without the release of radioactive materials to the environment. One aspect of retrievability is the ability to remove the used fuel assemblies from the DCSS and repackage them in a new container without releasing radioactive materials. Used fuel is likely to be retrievable if the fuel rods as well as the assemblies are not warped, the cladding is intact, and the confinement boundary has not been breached. Any ingress of air and moisture into the DCSS can lead to degradation of the used fuel assemblies due to oxidation, particularly if fuel temperatures are sufficiently high. To ensure the integrity of used-fuel canister confinement boundaries, 10 CFR 72.122(h)(4) specifies that storage confinement systems must have the capability for continuous monitoring, such that the licensee is able to determine when corrective action needs to be taken to maintain safe storage conditions. However, this regulation goes on to state that periodic monitoring is sufficient for dry spent-fuel storage provided periodic monitoring is consistent with the DCSS design requirements. In addition, 10 CFR 72.128(a)(1) specifies that used-fuel storage systems must be designed with a capability to test and monitor components important to safety, and 10 CFR 72.122(i) specifies that instrumentation systems for dry storage casks must be provided in accordance with cask design requirements to monitor conditions that are important to safety over anticipated ranges for normal and off-normal conditions. Finally, 10 CFR 71.55 describes the general requirements for packaging used for the shipment of fissile materials, including spent nuclear fuel.

NRC Interim Staff Guidance (ISG) document ISG-5, Rev. 1, “Confinement Evaluation,” provides guidance for evaluating the design and analysis of the proposed cask confinement system for normal, off-normal, and accident conditions, and NRC ISG-25, “Pressure and Helium Leakage Testing of the Confinement Boundary of Spent Fuel Dry Storage Systems,” provides supplemental guidance

for evaluating the helium leakage testing and American Society of Mechanical Engineers (ASME) Code provides guidance for required pressure (hydrostatic/ pneumatic) testing that is specified for the DCSS confinement boundary.

The confinement boundary is relied upon to (1) confine radioactive materials to a degree sufficient to meet Part 72 dose limits and (2) maintain a pressurized helium environment to ensure an inert atmosphere and, in some designs, to ensure adequate cooling of the spent nuclear fuel. The DCSS confinement boundary for welded canisters consists of the top lid, canister shell, bottom plate, top lid-to-shell inner weld, and other associated welds, including the vent cover welds. The canister cylindrical shell is fabricated from rolled stainless steel plate that is joined by a full-penetration butt weld, which is 100% radiographed. The top and bottom cover plates are sealed by separate, redundant closure welds. For canisters loaded after the issuance of ISG-15 and ISG-18, the cover plate-to-shell welds are performed in accordance with guidance in these ISG documents. Typically, the shell-to-bottom-plate and shell seam welds are performed in the fabrication shop, while the lid-to-shell weld is performed in the field after fuel loading. Furthermore, the top and bottom end closure welds are multiple-pass welds, which consist of three or more layers of weld metal. Each layer may be composed of a single weld bead or several adjacent weld beads of common thickness. A minimum of three layers will minimize the probability of a weld flaw's propagating through the weld layers, resulting in a leakage path. Consequently, the probability is very low for a pinhole leak that might occur in a single-layer weld, since the chance of pinholes being in alignment in successive weld layers is not credible. Furthermore, all the canister confinement boundary welds are inspected according to the appropriate articles of the ASME Code, Section III, Division 1, Subsection NB, and the acceptance criteria are in accordance with NB-5300. Therefore, any fabrication flaw would be detected during the in-process and post-weld examinations.

The Welded Canister Seal and Leakage Monitoring Program is an aging management program (AMP) that consists of the following activities:

(a) A site-specific assessment of the used-fuel storage canisters to achieve the following:

(i) Determine the criteria by which the canister top lid and vent cover welds and the canister cylindrical shell longitudinal and circumferential welds were designed, fabricated, erected, and tested. On the basis of the design and fabrication records, establish the stress conditions of the canister welds.

(ii) Examine the environmental conditions of the used-fuel storage canisters to establish the surface temperature and deposits (e.g., chlorides) on the storage canister welds. If the surface temperatures are below 85°C (185°F), indicating that deliquescence of dry salt deposits and subsequent stress corrosion cracking (SCC) can occur, establish the humidity at the canister surface to determine the likelihood of wet surface conditions for the canister welds. The possibility of moisture introduction from other sources (e.g., rainwater or cooling tower water intrusion) should also be considered. Evaluate the susceptibility of the storage canister welds to SCC under the environmental conditions at the used-fuel storage site. Surface temperature measurement may not be necessary if the temperature is assumed to be in the susceptible range for chloride-induced SCC.

(iii) On the basis of the combination of material and fabrication conditions, applied and residual stress, and wet or moist surface conditions, identify the canister locations prone to potential SCC cracking. Alternatively, the applicant may choose to use the ongoing EPRI program to define SCC susceptibility criteria per NEI/NRC RIRP-N-10-01.

(b) On the basis of the information established in the assessment of canister welds, develop a site-specific condition monitoring (i.e., inspection) program to manage the aging effects of cracking of the canister closure welds and canister shell longitudinal and circumferential welds due to SCC or other degradation processes in an aggressive environment. Dust is likely to accumulate on canister surfaces, particularly on the top surface of horizontal storage system. Therefore, the site-specific program should include surface preparation (cleaning) to enable detection of cracks, and may also require volumetric examination to verify acceptance for continued service. Define the method, extent, and frequency of the inspection program, as well as the sample size and the basis for selection. Also, specify whether access to the weld surface would require retrieval of the canister from the storage module or overpack. If remote inspection using a camera and/or fiber optic technology introduced through openings, such as air inlets and outlets, is proposed, the access path from the vents to the weld surface and the sensitivity and effectiveness of this technique should first be demonstrated on a site-specific basis. However, if managing the effects of cracking is not feasible without significant additional effort, an alternative activity to inspection may rely on monitoring of leakage to ensure timely detection of a potential breach of the canister confinement boundary to prevent degradation of the contents of the storage canisters. Licensees may choose to participate in industry programs for developing inspection and monitoring techniques to ensure that a helium cover gas is maintained inside the canisters during the requested period of extended operation.

IV.M3.1.1 Program Interfaces

The aging degradation effects on canister support structures in NUHOMS, HI-STORM, HI-STAR, NAC-MPC, NAC-UMS and VSC-24 systems or mechanical components in the DCSS designs, such as metal liners, bolting, access doors, vents, or sealing materials (polyurethane foam or other materials), as well as lightning protection system (if applicable), are managed by the AMP in Section IV.M1, “External Surfaces Monitoring of Mechanical Components,” and aging degradation effects on plain and reinforced concrete structures of DCSSs and foundation pads are managed by the AMP in Section IV.S1, “Concrete Structures Monitoring Program.” The aging effects on the structural and functional integrity of the canister internal components are managed by the AMP in Section IV.M5, “Canister/Cask Internals Structural and Functional Integrity Monitoring Program.” Furthermore, the design of welded canisters includes a fatigue analysis and other time-limited aging analyses (TLAAs), such as degradation of neutron-absorbing materials. If the analysis meets the five criteria in Section 3.5.1 of NUREG-1927, their validity should be verified for the requested period of extended operation in accordance with the TLAAs described in Sections III.2, “Fatigue of Metal and Concrete Structures and Components;” III.3, “Corrosion Analysis of Metal Components;” III.4, “Time-Dependent Degradation of Neutron-Absorbing Materials.” If they do not meet the Section 3.5.1 criteria and are not included in the original design basis analysis, the applicant should demonstrate compliance with the applicable design standards and requirements.

IV.M3.2 Evaluation and Technical Basis

1. ***Scope of Program:*** The program consists of examination and/or monitoring of the top lid and vent cover welds as well as canister shell longitudinal and circumferential welds of the used-fuel storage canister confinement boundary to ensure that timely and appropriate corrective actions can be taken to maintain safe storage conditions of the canister. The types of welded canister designs covered by the program include MPC-24, -32, and -68 for the HI-STORM system; MPC-68 and -80 for the HI-STAR system; MPC-26 and -36 for the NAC-MPC system; UMS-24 for the NAC-UMS system; the multi-assembly sealed basket for the VSC-24 system; W21 and W74 for the W-150 system; and 7P, 12T, 24P, 32P, 52B, 61BT, 61BTH, 24PT, 24PTH, 24PHB, 32PT, and 32PTH for the NUHOMS system or other canisters with equivalent configurations and design.

2. ***Preventive Actions:*** The preventive actions for this program include monitoring of the confinement weld surface conditions such as temperature, surface deposits (e.g., chlorides), and, if deemed necessary, humidity, to identify conditions that may cause deliquescence of dry salt deposits and result in SCC of austenitic stainless steels.

   Preventive actions also include following the guidance of NRC ISG documents on the materials selection and fabrication, design, and testing of canisters, as described in NRC ISG-5, ISG-15, ISG-18, and ISG-25. ISG-15, "Materials Evaluation," provides specific guidance for evaluating material-related issues for used-fuel storage canisters under normal, off-normal, and accident conditions. For continued confinement effectiveness during storage, the welded closure canisters rely on weld integrity. Preparation and examination of welds in accordance with ISG-15 provide reasonable assurance that no flaw of significant size exists such that it could impair the structural strength or confinement capability of the weld. Therefore, helium leakage testing of such welds is unnecessary, provided the weld is also in compliance with the guidance of NRC ISG-18.

   NRC ISG-18, "The Design and Testing of Lid Welds on Austenitic Stainless Steel Canisters as the Confinement Boundary for Spent Fuel Storage," addresses the design and testing of the various closure welds, or "lid welds," associated with the redundant closure of all-welded austenitic stainless steel canisters. 10 CFR 72.236(e) states that "the spent-fuel storage cask must be designed to provide redundant sealing of confinement systems." For a welded canister design, the Nuclear Regulatory Commission (NRC) staff has accepted closure designs employing redundant lids or covers, each with independent field welds. Thus, a potential leak path would have to sequentially breach two independent welds before the confinement system at the lid would be compromised. The shell longitudinal and circumferential welds are the only locations where the breach of a single weld would result in leakage. However, as discussed above, the shell weld is a full-penetration butt weld prepared in the shop and the entire length of the weld is radiographed. Consequently, the probability of a pinhole leak is extremely low.

   NRC ISG-5, "Confinement Evaluation," provides guidance for evaluating the design and analysis of the proposed cask confinement system for normal, off-normal, and accident conditions. To meet the regulatory requirements for radiation dose limits prescribed in 10 CFR 72, the confinement evaluation should ensure that the DCSS design satisfies the following acceptance criteria:

(a) The cask design must provide redundant sealing of the confinement boundary. Typically, this means that field closure of the confinement boundary must have either two seal welds or two metallic O-ring seals.

(b) To meet the regulatory requirements and general design criteria of Chapter 2 of the Standard Review Plan (NUREG-1536), the design and construction of the confinement boundary should be in accordance with ASME Code Section III, Subsection NB or NC, which defines the standards for all aspects of construction, including materials, design, fabrication, examination, testing, inspection, and certification of the components.

(c) The applicant should specify the maximum allowed leakage rates for the total primary confinement boundary and redundant seals. However, this is unnecessary for storage casks having closure lids that are designed and tested to be "leak tight" as defined in "American National Standard for Leakage Tests on Packages for Shipment of Radioactive Materials," ANSI N14.5. The applicant's leakage analysis should demonstrate that an inert atmosphere will be maintained within the cask during the storage lifetime.

(d) The applicant should describe the proposed monitoring capability and/or surveillance plans for mechanical closure seals. However, for casks with welded closures, the NRC staff has determined that no closure monitoring system is required. To show compliance with 10 CFR 72.122(h)(4), cask vendors have proposed, and the staff has accepted, routine surveillance programs and active instrumentation to meet the continuous monitoring requirements.

(e) The canister should be provided with a non-reactive environment to protect fuel assemblies against fuel cladding degradation, which might otherwise lead to gross rupture. A non-reactive environment is typically achieved by drying, evacuating air and water vapor, and backfilling with a non-reactive cover gas (such as helium).

In addition, the discussion section of NRC ISG-25 states that if the entire confinement boundary is tested to be "leak tight" in accordance with ANSI-N14.5 (1.0×10^{-7} ref. cm^3/sec) and the canister lid-to-shell weld conforms to the criteria of NRC ISG-18, then the probability of leakage is very low. However, these ISG documents provide guidance for the design, fabrication, and loading of the dry storage canisters, but do not address aging-related degradation effects (e.g., breach of the canister confinement boundary) that may occur during extended long-term storage. These aging effects need to be adequately managed such that the intended functions of all important-to-safety components and structures are maintained during the requested period of extended operation. Whether the canister closure welds were performed in accordance with ISG-25 is an important consideration in establishing the details of the aging management program such as inspection interval and the sample size of storage canisters to be inspected.

3. ***Parameters Monitored or Inspected:*** The program monitors and inspects imperfections such as cracking due to SCC or fatigue/cyclic loading, loss of material due to general corrosion or pitting, or other aging degradation processes in the canister confinement

welds that could significantly reduce their structural integrity and confinement effectiveness. The program manages aging degradation due to cracking by monitoring for evidence of surface-breaking linear discontinuities or pinholes. The program also manages loss of material by monitoring for gross or abnormal surface conditions, such as corrosion products or pitting, on the surface of the welds and heat-affected zone (HAZ) adjacent to the weld. If additional uncertainties exist and the condition of the welds cannot be verified as acceptable through visual examination, the inspection program may require surface preparation, increase in sample size, and volumetric examination, as necessary.

Where the surface deposition of aggressive species such as chlorides is possible, the environmental conditions near the confinement welds, such as temperature, humidity, and surface deposits (e.g., chlorides), are monitored to identify conditions that cause deliquescence of dry salt deposits, which may lead to SCC of the welds or HAZ adjacent to the welds (cracking typically occurs in the HAZ of the weld). This can be accomplished by continuous or periodic monitoring of the surface temperatures in the vicinity of the seal welds to verify that they remain above 85°C (185°F) —the temperature above which deliquescence at any surface salt deposits and consequent SCC are considered unlikely (Caseres and Mintz 2010). However, as stated above under "Program Description," the possibility of moisture introduction from other sources (e.g., rainwater or cooling tower water intrusion) should also be considered. Surface temperature measurement may not be necessary if it is assumed to be in the susceptible range for chloride-induced SCC.

For situations where limited access to the canister seal welds or limited sensitivity and resolution of the inspection technique employed do not permit an effective direct inspection program, the licensee may choose to participate in industry programs for developing inspection and monitoring techniques to ensure that a helium cover gas is maintained inside the canisters during extended dry cask storage. The following techniques may be considered to ensure timely detection of a potential breach of the canister confinement boundary:

(a) Continuous or periodic monitoring of canister surface temperatures at multiple locations and/or the atmosphere surrounding the canisters using a mass spectrometer system for helium leak detection or similar technique to verify that there is no leakage of the helium backfill in the canisters. The sensitivity and effectiveness of this technique should be demonstrated on a site-specific basis.

(b) Continuous or periodic monitoring of the atmosphere surrounding the canisters to verify the absence of radioisotopes that would indicate leakage from the canisters. Again, the sensitivity and effectiveness of this technique should be demonstrated on a site-specific basis.

4. ***Detection of Aging Effects:*** This program manages aging effects of cracking due to SCC or fatigue/cyclic loading and loss of material due to corrosion or other degradation processes, using visual inspection, surface environmental condition monitoring, and detection of helium leakage and/or radioactive species release. When using the ASME Code, visual inspections should be conducted in accordance with the applicable code

requirements. In the absence of applicable code requirements, visual inspections of metallic component surfaces should be performed using approved site-specific procedures. Remote inspection using a camera and/or fiber optic technology introduced through openings, such as air inlets and outlets, is acceptable, provided the access path from the vents to the weld surface and the sensitivity and effectiveness of this technique are first demonstrated on a site-specific basis. The technique should demonstrate detection capability to the specified resolution. These methods include various visual examinations for detecting aging-related degradation, such as inspecting general surface condition to detect and size surface-breaking discontinuities. For example visual EVT-1 examination with a resolution of 12.5 μm (0.0005 in.) is being used for inspection of reactor core internals (BWRVIP-03, 2005). To enable crack detection, surface preparation (cleaning) may be required.

The sample size of storage canisters to be inspected should be based on whether the welds were performed in accordance with the guidance of NRC ISG-15 and ISG-18, environment, estimated stress state of the weld, length of time in service, design configuration, decay heat load during normal operation, abnormal conditions during service, and operating experience. Canisters that were loaded before the publication of the NRC ISG-5, ISG-15, ISG-18, and ISG-25 should be included in the sample. The sample should also consider the canisters that may have had design modifications made without prior NRC approval in accordance with 10 CFR 72.48. For Independent Spent Fuel Storage Installations (ISFSIs) in marine environments (i.e., salty air), a larger sample size should be considered to ensure that the sample size is representative of the site environmental and DCSS material, design, and fabrication conditions. This is particularly important if surface conditions are such that salt deposition (a function of surface location and orientation) and deliquescence (T < 85°C [185°F]) are possible at or near the welds. The inspection interval and the number of canisters inspected should be based on an engineering assessment of possible crack growth rates for the specific condition of that canister, not to exceed 20 years (NUREG-1927).

The inspection of the weld should be performed by qualified personnel who meet the requirements of ASME Code Section XI, IWA-2300, "Qualification of Nondestructive Examination Personnel," as prescribed in 10 CFR 72.158. As stated under element 3 ("Parameters Monitored or Inspected"), weld surface temperature monitoring, detection of leakage of the helium from the canisters, or detection of the release of radioactive species from the stored fuel should be considered as alternatives to visual surface inspection.

5. ***Monitoring and Trending:*** The methods for monitoring, recording, evaluating, and trending the results from the inspection program are in accordance with approved site-specific procedures. New capabilities for detection of aging effects and monitoring and trending should be evaluated and implemented to ensure timely detection and accurate prediction of aging effects. The operations-based aging management concept of analysis and assessments (toll gates), described in NEI 14-03, should provide periodic assessments of new aggregated information as they become available. The sources of information include industry efforts related to research and development, monitoring and inspection, High Burnup Dry Storage Cask Research and Development Project, and chloride-induced SCC.

6. ***Acceptance Criteria:*** The program provides specific examination acceptance criteria for the direct or remote visual inspections of the canister confinement welds. For examinations performed in accordance with ASME Code Section XI, the acceptance criteria of Subsection IWB-3500 apply. If there is significant uncertainty in the results of surface examination performed by either direct or remote techniques and volumetric examination is not feasible, then the licensee should develop an alternative plan to demonstrate continued service. If corrective action includes reexamination of the component, then an acceptable inspection interval and its technical justification should be established. The maximum allowable levels of helium or radioactive species in the air outlet should be specified in the licensed facility technical specifications, if the indirect monitoring techniques listed under program element 3 are employed.

7. ***Corrective Actions:*** Any detected conditions that do not satisfy the examination acceptance criteria are required to be dispositioned through the approved site corrective-action program, which may require repackaging, or volumetric examination to determine the flaw size and analytical evaluation in accordance with a methodology comparable to ASME Code, Section XI IWA-4422.1, to determine whether the flaw is acceptable for continued service until the next inspection. If volumetric examination is not feasible, the licensee should develop an alternative plan to demonstrate continued service. Licensees may choose to participate in industry programs (Waldrop 2013) for developing a susceptibility assessment of SCC of stainless steel welds under marine environments to predict crack initiation and perform assessment of flaw growth and flaw tolerance. Corrective actions may include repair, if it can be shown that the weld repair would not degrade the structural integrity of the confinement boundary and the contents of the welded canister.

8. ***Confirmation Process*****:** Site QA procedures, review and approval processes, and administrative controls are implemented according to the requirements of 10 CFR Part 72, Subpart G. As discussed in Appendix A to this report, the requirements of 10 CFR Part 72, Appendix G, are acceptable to address the corrective actions, confirmation process, and administrative controls.

9. ***Administrative Controls*****:** See element 8, above.

10. ***Operating Experience:*** Studies on the susceptibility to SCC of Type 304, 304L, and 316L austenitic stainless steels and their welds in marine environments indicate that chloride-induced SCC is strongly dependent on the concentration of salt deposits, residual stress, cask temperature, and the relative humidity of the surrounding environment (Caseres and Mintz 2010). The results of salt fog tests, although considered conservative because of the high absolute humidity used in these tests, demonstrate that the deliquescence of dry salt deposits can lead to SCC of austenitic stainless steels at temperatures that are only slightly greater than ambient temperatures (e.g., 43°C [109°F]). Isolated corrosion pits and general corrosion are also observed at these temperatures, particularly in the HAZ, because of chromium depletion from the matrix. Cracking is primarily transgranular with sections of intergranular branching, and occurs in regions where tensile stresses are the greatest or near the pits in the HAZ of the welds. None of the specimens exposed to the salt fog at 85°C and 120°C (185°F and 248°F) exhibited

cracking, because of the inability of salt deposits to deliquesce at high temperatures. Subsequent research has indicated that the deliquescence relative humidity for sea salt is close to that of $MgCl_2$ pure salt. SCC is observed between 35°C (95°F) and 80°C (176°F) when the ambient relative humidity is close to or higher than this level, even for surface salt concentrations as low as 0.1 g/m^2 (Oberson et al. 2013). NRC IN 2012-20 cites several other examples of chloride-induced SCC of austenitic stainless steel components in nuclear applications.

The inspection report for the Calvert Cliffs ISFSI (Gellrich 2012) provides an indication of the capabilities and limitations of visual inspection techniques for evaluating the condition of ISFSI components. Calvert Cliffs performed an inspection of the interior of two horizontal storage modules (HSMs) and the exterior of the dry shielded canisters (DSCs) they contained. The visual inspection was conducted using a remote-controlled, high-definition pan-tilt-zoom camera system with a 100-mm (3.94 in.) head. A remote inspection was performed by lowering the camera through the rear outlet vent, which allowed for viewing of the majority portion of the DSC, its support structure, and the interior surfaces of the HSM. A direct inspection was performed through the partially open door by mounting the camera on a pole. This method allowed for views of the bottom end of the DSC, the seismic restraint, the HSM doorway opening, and the back side of the HSM door. The resolution of the images obtained was not stated. On the upper shell of both casks**,** a thick coat of dust and small clumps of unknown material were observed. Near the outlet vent, there was evidence of water coming in contact with the DSC, apparently from wind-driven rainwater entering the module via the rear outlet vent. The center circumferential weld and longitudinal welds were found to be in good condition, but the bottom shield plug circumferential weld was not accessible. A few small surface rust spots were noted on the DSC shell base metal, and this rust was attributed to contamination with free iron during fabrication or handling prior to placement of the DSC in service.

Palisades VSC-24 lead cask Number 15 was also inspected in May 2012 (SFD/NRC 13-003). The components inspected included the exterior walls and bottom surface of the concrete cask, the cask internal steel liner and air ducts, the cask lid, the underlying pad surface, and the steel canister structural lid and closure weld. The inspections were carried out using direct visual inspection, boroscopic equipment with video recording, and remote cameras. In general, the components inspected were found to be in very good condition, with some dust and debris accumulation. Minor defects in the concrete cask exterior surfaces were repaired with grout, bolts associated with the cask lid that had undergone moderate corrosion were replaced, and minor coating degradation on the canister structural lid was repaired. In addition, the concrete cask lid gasket was replaced with a new gasket upon final closure, even though the original gasket was found to be in good condition with no evidence of leakage due to weather.

IV.M3.3 References

10 CFR 71.55. General Requirements for Fissile Material Packages, Nuclear Regulatory Commission, 1–1–12 Edition, 2012.

10 CFR Part 72, Appendix G, Quality Assurance Criteria for the Independent Storage of Spent Nuclear Fuel, High-Level Radioactive Waste, and Reactor Related Greater Than Class C Waste, Nuclear Regulatory Commission, 1–1–12 Edition, 2012.

10 CFR 72.48, Changes, Tests, and Experiments, Nuclear Regulatory Commission, 1–1–12 Edition, 2012.

10 CFR 72.122(h), Confinement Barriers and Systems, Nuclear Regulatory Commission, 1–1–12 Edition, 2012.

10 CFR 72.128, Criteria for Spent Fuel, High-Level Radioactive Waste, and Other Radioactive Waste Storage and Handling, Nuclear Regulatory Commission, 1–1–12 Edition, 2012.

10 FCR 72.158, Control of Special Processes, Nuclear Regulatory Commission, 1–1–12 Edition, 2012.

10 CFR 72.236, Specific Requirements for Spent Fuel Storage Cask Approval and Fabrication, Nuclear Regulatory Commission, 1–1–12 Edition, 2012.

ANSI-N14.5, Radioactive Materials – Leakage Tests on Packages for Shipment, American National Standards Institute, 1997.

ASME Boiler and Pressure Vessel Code, Section III, Rules for Construction of Nuclear Power Plant Components, Division 1, Subsection NB, Class 1 Components, American Society of Mechanical Engineers, New York, 2004.

BWRVIP-03, TR-105696-R13, Rev. 13, BWR Vessel and Internals Project: Reactor Pressure Vessel and Internals Examination Guidelines, EPRI Report No. 1021007NP, Electric Power Research Institute, Palo Alto, CA, Dec. 2010.

Caseres, L., and Mintz, T.S., Atmospheric Stress Corrosion Cracking Susceptibility of Welded and Unwelded 304, 304L, and 316L Austenitic Stainless Steels Commonly Used for Dry Cask Storage Containers Exposed to Marine Environments, NUREG/CR-7030, Nuclear Regulatory Commission, Washington, DC, October 2010.

Electric Power Research Institute, High Burnup Dry Storage Cask Research and Development Project: Final Test Plan, Contract No.: DE-NE-0000593, Rev. 0, February 27, 2014.

Gellrich, G., Calvert Cliffs Nuclear Power Plant, letter to Nuclear Regulatory Commission, Response to Request for Supplemental Information, RE: Calvert Cliffs Independent Spent Fuel Storage Installation License Renewal Application (TAC No.-L24475), ADAMS ML12212A216, July 27, 2012.

NEI 14-03, Industry Guidance for Operations-Based Aging Management for Dry Cask Storage, Nuclear Energy Institute, September, 2014.

NEI/NRC RIRP-N-10-01, Regulatory Issue Resolution Protocol Screening Form and Resolution Plan for Chloride-Induced Stress Corrosion Cracking, Nuclear Energy Institute, Washington, DC, ADAMS ML14052A015, May 28, 2013.

NRC IN 2012–20, Potential Chloride-Induced Stress Corrosion Cracking of Austenitic Stainless Steel and Maintenance of Dry Cask Storage System Canisters, Information Notice, U.S. Nuclear Regulatory Commission, Washington, DC, November 14, 2012.

NRC ISG-5, Confinement Evaluation, Revision 1, Interim Staff Guidance, Nuclear Regulatory Commission, Washington, DC, May 1999.

NRC ISG-15, Materials Evaluation, Revision 1, Interim Staff Guidance, Nuclear Regulatory Commission, Washington, DC, January 2001.

NRC ISG-18, The Design and Testing of Lid Welds on Austenitic Stainless Steel Canisters as the Confinement Boundary for Spent Fuel Storage, Interim Staff Guidance, Revision 1, Nuclear Regulatory Commission, Washington, DC, October 2008.

NRC ISG-25, Pressure and Helium Leakage Testing of the Confinement Boundary of Spent Fuel Dry Storage Systems, Interim Staff Guidance, Nuclear Regulatory Commission, Washington, DC, August 2010.

NUREG-1536, Standard Review Plan for Spent Fuel Dry Storage Systems at a General License Facility—Final Report, Revision 1, Nuclear Regulatory Commission, Washington, DC, July 2010.

NUREG-1927, Rev. 1, Standard Review Plan for Renewal of Spent Fuel Dry Cask Storage System Licenses and Certificates of Compliance, Nuclear Regulatory Commission, Washington, DC, March 2011.

Oberson, G., Dunn, D., Mintz, T., He, X., Pabalan, R., and Miller, L., US NRC-Sponsored Research on Stress Corrosion Cracking Susceptibility of Dry Storage Canister Materials in Marine Environments, Paper 13344 presented at the 39th Annual Waste Management WM2013 Conference, Phoenix, AZ, February 24–28, 2013 (available at pbadupws.nrc.gov/docs/ML1302/ML13029A490.pdf, accessed March 14, 2013).

SFD/NRC 13–003, VSC-24 Lead Cask Inspection Report, VSC-24 CoC Renewal Project, Rev. 1, Enclosure 1, Responses to Request for Supplemental Information, Palisades ISFSI, ADAMS ML13050A323, February 10, 2013.

Waldrop, K., Electric Power Research Institute, letter to David Pstrak, Nuclear Regulatory Commission, EPRI's R&D Roadmap to Address Potential Stress Corrosion Cracking of Welded Stainless Steel Used Nuclear Fuel Storage Canisters, ADAMS ML13042A140, January 31, 2013.

Page intentionally blank

IV.M4 Bolted Cask Seal and Leakage Monitoring Program

IV.M4.1 Program Description

The objective of this program is to manage the aging effects on the integrity of the confinement boundary of bolted used-fuel storage casks of the following types: Transnuclear (TN) metal cask, MC-10 metal cask, NAC-I28 stand-alone cask, and CASTOR V/21 and X/33 systems. The aging effects include loss of material due to corrosion, loss of sealing forces due to stress relaxation and creep of the metallic O-rings, corrosion and loss of preload of the closure bolts, and stress corrosion cracking (SCC) of welded plugs used for sealing the drilled "inter-seal" passageway between the various vent seals and main lid seal of the TN casks. The program includes a continuous overpressure leakage monitoring system and a low-pressure alarm that is triggered when the pressure reaches a predetermined threshold. The continuous pressure monitoring ensures timely detection of aging effects in the confinement boundary so that appropriate corrective actions can be taken to maintain safe storage conditions of the dry cask storage systems (DCSSs). The program also includes periodic visual inspection of the closure seal components that are accessible and inspection and maintenance of the overpressure leakage monitoring system and the associated instrumentation per the site technical specifications to meet requirements of 10 CFR 72.122(h)(4), 10 CFR 72.122(i), and 10 CFR 72.128(a)(1).

One of the safety objectives of used-fuel DCSSs is to ensure that there is adequate confinement of the used fuel under all credible conditions of storage. Code of Federal Regulations 10 CFR 72.236(l) requires that the DCSSs be evaluated to ensure that the confinement of the radioactive material is maintained under normal, off-normal, and credible accident conditions. Furthermore, 10 CFR 72.122(h)(5) requires that the used fuel be packaged in a manner that allows handling and retrievability without the release of radioactive materials to the environment. One aspect of retrievability is the ability to remove the used fuel assemblies from the DCSS and repackage them in a new container without releasing radioactive materials. Used fuel is likely to be retrievable if the fuel rods as well as the assemblies are not warped, the cladding is intact, and the confinement boundary has not been breached. Any ingress of air and moisture into the dry cask storage canister can lead to degradation of the used-fuel assemblies due to oxidation, particularly if fuel temperatures are sufficiently high. To ensure the integrity of the used-fuel canister confinement boundary, 10 CFR 72.122(h)(4) requires that storage confinement systems must have the capability for continuous monitoring, such that the licensee is able to determine when corrective action needs to be taken to maintain safe storage conditions. However, this regulation goes on to state that periodic monitoring is sufficient for dry spent-fuel storage provided the periodic monitoring is consistent with the DCSS design requirements. In addition, 10 CFR 72.128(a)(1) requires that used-fuel storage systems must be designed with a capability to test and monitor components important to safety, and 10 CFR 72.122(i) specifies that instrumentation systems for dry storage casks must be provided in accordance with cask design requirements to monitor conditions that are important to safety over anticipated ranges for normal and off-normal conditions. Finally, 10 CFR 71.55 describes the general requirements for packaging used for the shipment of fissile materials, including spent nuclear fuel.

NRC ISG-5, Rev.1, "Confinement Evaluation," provides guidance for evaluating the design and analysis of the proposed cask confinement system for normal, off-normal, and accident conditions; NRC ISG-15, "Materials Evaluation," provides guidance on material-related issues; and NRC ISG-25, "Pressure and Helium Leakage Testing of the Confinement Boundary of Spent Fuel Dry Storage

Systems," provides supplemental guidance for evaluating the helium leakage testing and American Society of Mechanical Engineers (ASME) Code provides guidance for the required pressure (hydrostatic/pneumatic) testing that is specified for the DCSS confinement boundary.

The confinement boundary is relied upon to (1) confine radioactive materials to a degree sufficient to meet Part 72 dose limits and (2) maintain a pressurized helium environment to ensure an inert atmosphere and, in some designs, to ensure adequate cooling of the spent nuclear fuel. The DCSS confinement boundary for bolted casks consists of the cask shell, bottom plate, top lid, shell flange, and associated welds, including vent cover welds and the inner metallic O-ring lid seal. The cask cylindrical shell is fabricated from rolled stainless steel plate that is joined by a full-penetration butt weld, which is 100% radiographed. In addition, the bottom end closure welds are multiple-pass welds consisting of three or more layers of weld metal, which minimize the probability of a weld flaw propagating through the weld layers. Furthermore, these welds are inspected according to the appropriate articles of the ASME Code, Section III, Division 1, Subsection NB. Therefore, any fabrication flaw would be detected during the in-process and post-weld examinations.

The Bolted Cask Seal and Leakage Monitoring Program is an aging management program (AMP) that consists of the following activities:

(a) An overpressure leakage monitoring system for continuous monitoring of the pressure between the two seal assemblies in some cask designs or inside the cask cavity for other cask designs. In the TN, NAC-I28, and CASTOR metal casks, an overpressure leakage monitoring system provides continuous monitoring of pressure in the region between the redundant metallic seal assemblies, which is pressurized with a non-reactive gas to a pressure greater than the helium pressure in the cask cavity. Therefore, for these casks, the licensee does not have to specify the maximum allowed leakage rate because leakage of radioactive contents through the seals is not a credible event. An overpressure leakage monitoring system in the MC-10 casks provides continuous monitoring of pressure inside the cask cavity, and a decrease in pressure indicates a leakage from the cask cavity through both of the O-ring lid seals or through the vent lid welds. For this cask design, the applicant should specify the maximum allowed leakage rate, as recommended by NRC ISG-5, Rev. 1. Furthermore, as discussed above, the breach of the cask confinement boundary from causes other than degradation of the inner metallic seal or the vent lid seals is not considered credible.

(b) Periodic visual inspection of the closure seal components and maintenance of the overpressure leakage monitoring system and associated instrumentation.

IV.M4.1.1 Program Interfaces

The aging degradation effects on metal components and structures in DCSS overpacks such as metal liners, bolting, access doors, vents, or sealing materials (polyurethane foam or other materials), as well as lightning protection system (if applicable), are managed by the AMP in Section IV.3, "External Surfaces Monitoring of Mechanical Components," and aging degradation effects on plain and reinforced concrete structures of DCSSs and foundation pads are managed by the AMP in Section IV.S1, "Concrete Structures Monitoring Program." The aging effects on the structural and functional integrity of the cask internal components are managed by the AMP in Section IV.M5, "Canister/Cask Internals Structural and Functional Integrity Monitoring Program." Furthermore, the design of bolted casks includes a fatigue analysis for the sealing bolts and other time-limited aging analyses

(TLAAs), such as degradation of neutron absorber and radiation shields. If the analysis meets the five criteria in Section 3.5.1 of NUREG-1927, their validity should be verified for the period of extended operation in accordance with the TLAAs described in Sections III.2, "Fatigue of Metal and Concrete Structures and Components;" III.3, "Corrosion Analysis of Metal Components;" III.4, "Time-Dependent Degradation of Neutron-Absorbing Materials;" and III.5, "Time-Dependent Degradation of Radiation-Shielding Materials." If they do not meet the Section 3.5.1 criteria and are not included in the original design basis analysis, the applicant should demonstrate compliance with the applicable design standards and requirements.

IV.M4.2 Evaluation and Technical Basis

1. ***Scope of Program:*** This program is used to manage the aging effects on the integrity of the confinement boundary of bolted used-fuel storage casks to ensure that timely and appropriate corrective actions can be taken to maintain safe storage conditions of the casks. The aging effects include loss of material due to corrosion, loss of sealing forces due to stress relaxation and creep of the metallic O-rings, loss of preload of the closure bolts, and SCC of welded plugs for sealing the inter-seal passageway in the TN casks. The specific components and systems that are typically managed by this program include the shield lid, primary lid, closure lid, protective covers, O-ring assemblies, and associated bolts and welds. The types of bolted cask designs covered by the program include TN-24, -32, -40, and -68; NAC-I28; CASTOR V/21 and X/33; and MC-10 bolted casks.

2. ***Preventive Actions:*** The overpressure leakage monitoring system is periodically checked per the site inspection program to meet the 10 CFR 72.122(h)(4) and 10 CFR 72.122(i) requirements. This periodic inspection ensures proper functioning of the overpressure leakage monitoring system, which ensures timely detection of the loss of intended function of the sealing components in the confinement boundary of the bolted cask.

   In addition, in conjunction with periodic visual inspection of the accessible closure seal components, including the closure bolts, the O-ring associated with the cask protective cover may be replaced as a preventive action. The replacement frequency is based on test data for the O-ring materials and determined by correlating loss of sealing forces over time with leakage tightness, as recommended in NUREG/CR-7116 (Sindelar et al. 2011).

   Preventive actions also include compliance with NRC Interim Staff Guidance (ISG) on the materials selection for fabrication, design, and testing of casks, as described in NRC ISG-5, "Confinement Evaluation"; ISG-15, "Materials Evaluation"; and ISG-25, "Pressure and Helium Leakage Testing of the Confinement Boundary of Spent Fuel Dry Storage Systems."

3. ***Parameters Monitored or Inspected:*** The program continuously monitors the pressure and leak rate of the non-reactive cover gas (a) between the metallic seal assemblies in the TN, NAC-I28, and CASTOR casks, and (b) inside the cask cavity in the MC-10 casks to verify the integrity of the seal assemblies in bolted casks. Visual inspections of closure seal components underneath the protective cover, including the closure bolts, are also performed to detect corrosion or cracking, as well as water intrusion. The program

manages aging effects of loss of material by monitoring for gross or abnormal surface conditions, such as corrosion products or pitting. The program also manages aging effects of cracking by monitoring for evidence of surface-breaking linear discontinuities or pinholes. When using the ASME Code, visual inspections should be conducted in accordance with the applicable code requirements. In the absence of applicable code requirements, visual inspections of metallic component surfaces should be performed by approved site-specific procedures.

4. ***Detection of Aging Effects:*** The overpressure leakage monitoring system continuously monitors the pressure and leakage rate between the seal assemblies in the TN, NAC-I28, and CASTOR metal casks and inside the cask cavity of the MC-10 casks, and includes a low-pressure alarm. The leakage monitoring system alarm is triggered when the maximum allowable leakage rate is reached. The overpressure monitoring panel is checked at least daily to verify that no alarms are indicated. Thus, continuous monitoring of the pressure and leakage rate in the TN, NAC-I28, CASTOR, and MC-10 casks with a low-pressure alarm provides a means for early detection of aging effects on the seal assemblies.

   The program includes periodic visual inspection of closure seal components after removing the protective cover to verify the absence of corrosion or cracking, and of water intrusion in the sealed area. The inspection interval and the sample size are determined on a site-specific basis, taking into account the length of time in service, decay heat load, maintenance history, and service environment, but the interval should not exceed 20 years (NUREG-1927, Virginia Electric and Power Company 2006).

   The leakage monitoring system and the associated instrumentation are periodically inspected per facility surveillance requirements to meet requirements of 10 CFR 72.122(h)(4) and 10 CFR 72.122(i). The condition monitoring thresholds should be periodically verified for the correct set point. A properly maintained overpressure leakage monitoring system ensures timely detection of aging effects.

5. ***Monitoring and Trending:*** The pressure level and leakage rate of the non-reactive cover gas between the metallic seal assemblies in the TN, NAC-I28, and CASTOR metal casks and of helium in the cask cavity of the MC-10 casks are monitored continuously. The pressure and leakage rate data are trended to provide early detection of aging effects and to indicate when corrective action needs to be taken to maintain safe storage conditions of the DCCS, as required in 10 CFR 72.122(h)(4).

6. ***Acceptance Criteria:*** The maximum allowable leakage rates for the total confinement boundary and redundant seals, including the leakage rate of each seal, are specified in the facility's technical specifications. The acceptance criterion for the pressure monitoring is the absence of an alarmed condition. The facility's technical specifications contain pressure monitoring alarm response procedures that include criteria and specifications for corrective actions and response.

   For visual inspections of accessible carbon steel components, general and pitting corrosion, galvanic corrosion, or microbiologically induced corrosion (MIC) that does not meet the design specifications is not acceptable for continued service. For stainless

steels components, no surface discoloration is expected; the appearance of discoloration may indicate corrosive attack on the surface. For examinations performed in accordance with ASME Code, Section XI, the acceptance criteria of Subsection IWB-3500 apply.

If the condition of the cask components cannot be verified as acceptable after visual examination, surface cleaning may be required. If visual examination reveals surface indication, volumetric examination may be necessary. Such enhanced inspections would need to be developed on a site-specific basis.

7. ***Corrective Actions:*** Once the low-pressure alarm is triggered, troubleshooting of the pressure leakage should be performed and if necessary, an engineering evaluation conducted to determine whether the degradation of the seal assemblies requires immediate correction. Any detected conditions that do not satisfy the visual examination acceptance criteria are required to be dispositioned through the approved site corrective-action program, which may require analytical evaluation in accordance with a methodology comparable to ASME Code, Section XI, to determine whether the flaw is acceptable for continued service until the next inspection. Corrective actions include repair or replacement of the defective metallic seals, which may require equipment and facilities for evacuating and drying the cask cavity and back-filling it with helium.

8. ***Confirmation Process*****:** Site QA procedures, review and approval processes, and administrative controls are implemented according to the requirements of 10 CFR Part 72, Subpart G. As discussed in Appendix A to this report, the requirements of 10 CFR Part 72, Appendix G, are acceptable to address the corrective actions, confirmation process, and administrative controls.

9. ***Administrative Controls*****:** See element 8, above.

10. ***Operating Experience:*** Helium leakage in two of the TN-68 bolted casks at Peach Bottom was detected in October 2010 (NRC IN 2013-07). In both cases, there was no loss of confinement capability. The root cause analyses indicated that the leakage in one cask was caused by a material defect in the weld plug that provides sealing of the drilled inter-seal passageway associated with the drain port penetration of the cask lid. The defective welds were repaired in accordance with the ASME Code and cask design requirements. In the other cask, leakage existed in the cask main lid outer closure seal. A root cause evaluation concluded that the helium leak was due to inadequate sealing of the access plate in the protective cover and a lack of any verification of the integrity of the water-tight cover. The seal leakage was caused by galvanic corrosion at the interface between the aluminum-clad cask lid seal and the stainless steel clad cask body sealing surface of the outer portion of the cask lid seal. The corrosion resulted from water infiltration through the access plate in the protective cover. The primary corrective actions involved improving the access plate design and developing a method for verifying protective cover seal integrity. These activities were expected to be completed and implemented by mid-2012. Additional corrective actions included a change to torquing process for the lid bolts and ensuring that the access plate gaskets and O-rings were inspected at installation. In addition, the licensee has planned testing

of the protective covers of the remaining loaded casks; replacement of covers would be based on the test results. Corrosion of the TN-32 lid bolts and outer metallic lid seals has been observed in the Surry Independent Spent Fuel Installation (ISFSI) owing to external water intrusion near the lid bolts and outer metallic seals, resulting in five seal replacements. One seal on a CASTOR X/33 cask has also been replaced at Surry (Virginia Electric and Power Company 2002).

An inspection was carried out in 2011 on the lead cask TN-40 01 at Prairie Island in conjunction with the license renewal application for the ISFSI (Schimmel 2012). The components inspected included the carbon steel cask bottom and underlying concrete pad; the cask shell, lid, lid bolts, and trunnions; and the top neutron shield enclosure and shield bolts. In addition, the cask protective cover was removed to permit visual inspection of the protective cover, bolts, and seal; the access cover and bolts; and the overpressure tank, isolation valve and tubing, port cover, and port cover bolts. The only significant degradation observed was disbondment of approximately 25% of the protective coating on the bottom of the cask, minor uniform general corrosion at the upper trunnions, and a very minor rust coating on the stainless steel portions of the containment flange. In addition, the protective cover was found to have thin uniform corrosion on the flange sealing surface on the outer side of the O-ring and minor corrosion at the cover bolt holes, and the cask access cover had minor rust spots on the outside at the bolt holes. The protective-cover Viton O-ring was in good condition and was not replaced, and the access cover gasket was also in good condition but was replaced. The protective cover on TN-40 cask number 13 was also removed to permit a visual inspection. Here, all components were found to be in good condition, and the only degradation noted was minor rust stains on the protective coating directly below the access cover from corrosion products dripping off the access cover.

An inspection of an MC-10 cask was performed after about 20 years in service at Surry (Virginia Electric and Power Company 2006). Twelve knurled nuts, which fasten the closure cover to the cask, were removed for inspection. While there was some oxidation of the outer O-ring edge, the O-ring seal surface and the areas underneath the closure cover had no cracks or indications of degradation.

Stress relaxation and leakage tests on Helicoflex metallic seals, which are used in the CASTOR and TN cask designs, have been conducted in Germany at temperatures from room temperature to 150°C (302°F). These tests found that the pressure force on the seal and its elastic recovery (or usable resilience) decrease approximately linearly when plotted against the logarithm of time, but usable lives beyond 40 years with acceptable leak rates are extrapolated. Corrosion tests were also initiated on this same seal design in 2001 with borated (2400 ppm) water or a NaCl solution (10^{-3} mol) between the inner and outer jackets of the seal, and no increase in leakage rate has been detected to date (Völzke et al. 2012, 2013). In addition, the behavior of elastomer seals at low temperature (below room temperature) has been studied to determine the minimum temperature at which these materials can function in DCSS applications (Wolff et al. 2013).

IV.M4.3 References

10 CFR 71.55, General Requirements for Fissile Materials Packages, Nuclear Regulatory Commission, 1–1–12 Edition, 2012.

10 CFR Part 72, Appendix G, Quality Assurance Criteria for the Independent Storage of Spent Nuclear Fuel, High-Level Radioactive Waste, and Reactor Related Greater Than Class C Waste, Nuclear Regulatory Commission, 1–1–12 Edition, 2012.

10 CFR 72.122(h), Confinement Barriers and Systems, Nuclear Regulatory Commission, 1–1–12 Edition, 2012.

10 CFR 72.122(i), Instrumentation and Control Systems, Nuclear Regulatory Commission, 1–1–12 Edition, 2012.

10 CFR 72.128, Criteria for Spent Fuel, High-Level Radioactive Waste, and Other Radioactive Waste Storage and Handling, Nuclear Regulatory Commission, 1–1–12 Edition, 2012.

10 CFR 72.236, Specific Requirements for Spent Fuel Storage Cask Approval and Fabrication, Nuclear Regulatory Commission, 1–1–12 Edition, 2012.

ASME Boiler and Pressure Vessel Code, Section III, Rules for Construction of Nuclear Power Plant Components, Division 1, Subsection NB, Class 1 Components, American Society of Mechanical Engineers, New York, 2004.

NRC IN 2013–07, Premature Degradation of Spent Fuel Storage Cask Structures and Components from Environmental Moisture, Information Notice, Nuclear Regulatory Commission, Washington, DC, April 16, 2013.

NRC ISG-5, Confinement Evaluation, Revision 1, Interim Staff Guidance, Nuclear Regulatory Commission, Washington, DC, May 1999.

NRC ISG-15, Materials Evaluation, Revision 1, Interim Staff Guidance, Nuclear Regulatory Commission, Washington, DC, January 2001.

NRC ISG-25, Pressure and Helium Leakage Testing of the Confinement Boundary of Spent Fuel Dry Storage Systems, Interim Staff Guidance, Nuclear Regulatory Commission, Washington, DC, August 2010.

NUREG-1927, Rev. 1, Standard Review Plan for Renewal of Spent Fuel Dry Cask Storage System Licenses and Certificates of Compliance, Nuclear Regulatory Commission, Washington, DC, March 2011.

Schimmel, M., Prairie Island Independent Spent Fuel Storage Installation, Attachment 1 to Letter to Nuclear Regulatory Commission, Responses to Requests for Supplemental Information, RE: Prairie Island Independent Spent Fuel Storage Installation License Renewal Application (TAC No. L24592), ADAMS ML12065A073, February 29, 2012.

Sindelar, R. L., Duncan, A.J., Dupont, M.E., Lam, P.S., Louthan, M.R., Jr., Skidmore, T.E., and Einziger, R.E., Materials Aging Issues and Aging Management for Extended Storage and Transportation of

Spent Nuclear Fuel, NUREG/CR-7116, Savannah River National Laboratory, Aiken, SC, November 2011.

Virginia Electric and Power Company, Surry Independent Spent Fuel Storage Installation License Renewal Application, Docket No. 72–2, April 29, 2002.

Virginia Electric and Power Company, Surry Independent Spent Fuel Storage Installation Completion of License Renewal Inspection Requirement, Docket No. 72–2, License Number SNM-2501, August 22, 2006.

Völzke, H., Probst, U., Wolff, D., Nagelschmidt, S., and Schultz, S., Seal and Closure Performance in Long Term Storage, Proceedings of the PSAM11 & ESREL 2012 Conference, Helsinki, Finland, 25–29 June 2012.

Völzke, H. and Wolff, D., Spent Fuel Storage in Dual Purpose Casks Beyond the Original Design Basis, Proceedings of the International High-Level Radioactive Waste Management Conference (IHLRWMC), Albuquerque, NM, USA (April 28-May 2, 2013), American Nuclear Society, 2013.

Wolff, D., Jaunich, M., and Stark, W., Investigating the Performance of Rubber Seals at Low Temperatures, Proceedings of the International High-Level Radioactive Waste Management Conference (IHLRWMC), Albuquerque, NM, USA (April 28-May 2, 2013), American Nuclear Society, 2013.

IV.M5 Canister/Cask Internals Structural and Functional Integrity Monitoring Program

IV.M5.1 Program Description and Interfaces

The objective of the program is to manage the aging effects on the structural and functional integrity of the used-fuel assemblies and internals of storage canisters/casks [such as the NUHOMS dry shielded canister (DSC), the HI-STORM and HI-STAR multi-purpose canisters (MPCs), the various NAC International transportable storage canisters (MPC, UMS, MAGNASTOR), the Ventilated Storage Cask (VSC)-24 multi-assembly sealed basket (MSB), the Transnuclear (TN) metal casks, and the CASTOR and MC-10 casks] to ensure used-fuel integrity, fuel retrievability after extended long-term storage, and subsequent transportation of the used fuel for reprocessing or disposal. The aging effects managed include corrosion, creep, distortion, cracking, and peeling of laminates. The program monitors the aging degradation of heat transfer, radiation shielding, criticality control, confinement boundary, and structural support functions of the storage canister/cask internals caused by extended exposure to high temperature and radiation. The program focuses specifically on high-burnup fuel (HBF) assemblies (i.e., fuel assemblies with burnups exceeding 45 GWd/MTU). The program consists of (a) a site-specific assessment of the canister/cask designs to verify conformance with the applicable Nuclear Regulatory Commission (NRC) Interim Staff Guidance (ISG) documents, (b) detailed thermal and radiation analyses for the canister/cask designs used at the site to select cask/canister surface locations that are likely to be most sensitive to changes in temperature and radiation due to postulated degradation of used-fuel cladding and storage basket assembly or from helium leakage, and (c) develop a program for monitoring radiation and temperature at these locations to establish data trends under normal operating conditions. Any significant deviation from the established data trend is evaluated for potential degradation of the functional and structural integrity of the canister/cask internals. Potential deviations in data trends due to helium leakage are managed by the program activities under the aging management program (AMP) in Section IV.M3 for welded canisters and Section IV.M4 for bolted casks.

The regulations for the storage of used-fuel dry cask storage system (DCSS) designs stipulated in 10 CFR 72 have the following common safety objectives: (1) ensure that the radiation doses are below the limits prescribed in the regulations, (2) maintain subcriticality under all credible conditions of storage, (3) ensure that there is adequate confinement and containment of the used fuel under all credible conditions of storage, and (4) ensure that the used fuel is readily retrievable from the storage systems. The degradation of the neutron-absorbing materials is addressed by the time-dependent aging analyses (TLAAs) described in Sections III.4, “Time-Dependent Degradation of Neutron-Absorbing Materials.” The aging effects of a breach in the canister/cask confinement boundary and helium leakage are managed by either the AMP in Section IV.M3, “Welded Canister Seal and Leakage Monitoring Program,” or Section IV.M4, “Bolted Cask Seal and Leakage Monitoring Program,” and the aging effects on the external surface of the canister/cask are managed by the AMP in Section IV.M1, “External Surfaces Monitoring of Mechanical Components.” This AMP manages the structural and functional integrity of storage canister/cask internals to ensure retrievability of the used-fuel assemblies without releasing radioactive materials. Used-fuel assemblies are likely to be retrievable if the fuel rods as well as the assemblies are not warped, the cladding is intact, and the confinement boundary has not been breached.

The requirements of 10 CFR 72.122(l) and 72.236(m) stipulate that the storage system must be designed to allow ready retrieval of the used-fuel assemblies from the storage system for further

reprocessing or disposal. 10 CFR 72.122(h)(5) requires that the used-fuel assemblies must be packaged in a manner that allows handling and retrievability without the release of radioactive materials to the environment, and 10 CFR 72.122(h)(1) requirements ensure safe fuel storage and handling and minimize post-operational safety problems related to the removal of the used-fuel assemblies from storage. In accordance with this regulation, the cladding of the used-fuel assemblies must be protected against aging degradation that leads to gross rupture, and the used-fuel assemblies must be confined such that aging degradation of the fuel during storage will not cause any operational problem during its removal from storage. In accordance with the requirements of 10 CFR 71, the geometry of the used-fuel assemblies should not be substantially altered under normal conditions of transport. Pursuant to the criticality requirements of 10 CFR 71.55 and the shielding and containment requirements of 10 CFR 71.51, the licensee must ensure that there is no significant cladding failure. 10 CFR 71.43(f) requires the licensee to ensure that there is no loss or dispersal of spent fuel, no significant increase in external surface radiation level, and no substantial reduction in the effectiveness of the packaging, i.e., canister/cask.

In addition, 10 CFR 72.44 requires that the technical specifications of the DCSS designs include functional and operating limits, monitoring instruments, and limiting control settings to protect the integrity of the stored fuel assemblies and to guard against the uncontrolled release of radioactive materials. The limiting conditions are the lowest functional capability or performance levels of equipment required for safe operation. 10 CFR 72.44(c) also requires that the technical specifications of DCSS designs include surveillance requirements for inspection, monitoring, testing, and calibration activities to confirm that operation of the canister/cask is within the required functional and operating limits and that the limiting conditions for safe storage are met.

The applicable NRC ISG documents associated with the following three aspects of the DCSS design include

1. Fuel Cladding Considerations: NRC ISG-11, “Cladding Considerations for the Transportation and Storage of Spent Fuel,” and NRC ISG-24, “The Use of Demonstration Program as Confirmation of Integrity for Continued Storage of High Burnup Fuel Beyond 20 Years.”

2. Canister/Cask Confinement: NRC ISG-15, “Materials Evaluation”; NRC ISG-18, “The Design and Testing of Lid Welds on Austenitic Stainless Steel Canisters as the Confinement Boundary for Spent Fuel Storage”; and NRC ISG-25, “Pressure and Helium Leakage Testing of the Confinement Boundary of Spent Fuel Dry Storage Systems.”

3. Retrievability: NRC ISG-2, “Fuel Retrievability.”

Further details regarding the guidance of NRC ISG-18 and ISG-25 are described in the AMPs in Sections IV.M3 and IV.M4, respectively. The specific guidance and recommendations of the other ISG documents are discussed further in program element 2, “Preventive Actions.” The Canister/Cask Internals Structural and Functional Integrity Monitoring Program consists of the following:

(a) Assess the design basis documents for the canisters/casks to verify that they were designed, fabricated, erected, and tested in accordance with the guidance and recommendations of the applicable NRC ISG documents to establish the condition of the (i) used fuel cladding, (ii) canister/cask confinement, and (iii) retrievability of the used-fuel assemblies. In particular,

evaluate any changes made by the licensee in accordance with 10 CFR 72.48 to assess their impact on the design function, the method of performing or controlling the function, or an analysis that demonstrates that intended functions will be maintained during the requested period of extended operation.

(b) Perform detailed thermal and radiation analyses under normal conditions for all canister/cask designs used at the site to initially establish the change in the temperature and radiation profiles along the length and circumference of the canisters/casks as a function of storage time. An example of such temperature profiles for NUHOMS DSCs is presented in the report by Suffield et al. (2012). On the basis of the thermal profile, define select cask/canister surface locations where postulated degradation of fuel cladding and/or basket assembly is likely to cause significant deviations from the temperature and radiation data trends established under normal operating conditions. The degradation processes may include embrittlement due to radial hydride reorientation or creep of the used fuel cladding, and blistering, delamination, or bulging of the basket due to gas accumulation in the basket assembly.

(c) Develop a site-specific program for monitoring temperature and radiation at the locations identified above in activity (b) for a select sample of canisters/casks. The objective is to establish data trends under normal operating conditions, and validate or benchmark the estimated data trends obtained from thermal and radiation analyses. Any significant deviation from the established data trend is evaluated to determine the potential degradation of the functional and structural integrity of the canister/cask internals, and to ensure that the operation of the storage canister/cask is within the required functional and operating limits. The results of the AMPs in Sections IV.M3 or IV.M4 are reviewed to examine deviations in data trends caused by helium gas leakage from the canisters or casks.

IV.M5.2 Evaluation and Technical Basis

1. ***Scope of Program:*** The program applies to all canisters/casks that are sealed at both ends by welding and/or bolting and perform the function of confinement for used fuel. The various storage canisters include DSCs for NUHOMS systems; MPCs for HI-STORM and HI-STAR systems; transportable storage canisters (TSCs) for NAC-MPC, NAC-UMS, and MAGNASTOR systems; and MSBs for VSC systems and NAC-I28, MC-10, CASTOR and TN metal cask systems; their contents primarily consist of the used-fuel assemblies and the structural support or basket assembly. The program consists of monitoring of temperatures and radiation levels at selected locations on the surface of the storage canisters or casks to first establish data trends under normal operating conditions. Any significant deviation from these trends is evaluated for potential degradation of the functional and structural integrity of the canister/cask internals. The temperature and radiation monitoring should cover a representative sample of each of the storage canister/cask designs at the Independent Spent Fuel Storage Installation (ISFSI) site. Detailed thermal and radiation evaluations are performed for all canister/cask designs to identify cask/canister surface locations that are likely to be most sensitive to changes in temperature and radiation because of postulated degradation of the fuel cladding and basket assembly.

2. ***Preventive Actions:*** This AMP consists of an assessment of the various designs of storage canisters or casks to verify that they were designed, fabricated, erected, and

tested in accordance with the guidance and recommendations of the applicable NRC ISG documents. The guidance and recommendations in the following ISG documents are considered prevention or mitigation actions that provide assurance that the structural and functional integrity of the canister internals will be maintained consistent with its design basis during the requested period of extended operation.

Fuel Cladding Considerations:

NRC ISG-11, "Cladding Considerations for the Transportation and Storage of Spent Fuel," focuses on the acceptance criteria needed to provide reasonable assurance that commercial used fuel is maintained in the configuration that is analyzed in the Safety Analysis Reports (SARs) for used-fuel storage. To ensure integrity of the cladding, the following criteria should be met:

i. For all fuel burnups (low and high), the maximum calculated fuel cladding temperature should not exceed 400°C (752°F) for normal conditions of storage and short-term loading operations (e.g., drying, backfilling with inert gas, and transfer of the cask to the storage pad). However, for low-burnup fuel, a higher short-term temperature limit may be used if the applicant can show by calculation that the best-estimate cladding hoop stress is equal to or less than 90 MPa (13,053 psi) for the temperature limit proposed.

ii. During loading operations, repeated thermal cycling (repeated heatup/cool-down cycles) may occur but should be limited to fewer than 10 cycles, with cladding temperature variations that are less than 65°C (117°F) each.

iii. For off-normal and accident conditions, the maximum cladding temperature should not exceed 570°C (1058°F).

HBF may have cladding walls that have become relatively thin from in-reactor formation of oxides or zirconium hydride. For design basis accidents, where the structural integrity of the cladding is evaluated, the applicant should specify the maximum cladding oxide thickness and the expected thickness of the hydride layer (or rim), which may not be uniform. Cladding stress calculations should use an effective cladding thickness that is reduced by those amounts, and which has been justified by the use of oxide thickness measurements and valid computer codes.

It is expected that fuel assemblies with burnups of less than 45 GWd/MTU are unlikely to have a significant amount of hydride reorientation, owing to limited hydride content. The NRC ISG-11 guidance will allow all commercial spent fuel that is currently licensed by the NRC to be stored in accordance with the regulations contained in 10 CFR 72. However, cask vendors' requests for storage of spent fuel with burnup levels in excess of the levels licensed by the Office of Nuclear Reactor Regulation (NRR), or storage of cladding materials not licensed by the NRR, may require additional justification by the applicant.

The guidance contained in NRC ISG-11, Rev. 3, for storage of HBF for an initial period of 20 years was based on short-term laboratory test data and analysis, which may not be

applicable to the storage of HBF beyond 20 years. A major concern addressed in NRC ISG-11 was the potential detrimental effect of hydride reorientation on cladding integrity. Owing to the presence of radial hydrides, HBF could exhibit a ductile-to-brittle transition temperature (DBTT) that could influence the retrievability of HBF assemblies and result in operational safety problems for HBF that has cooled below the DBTT (i.e., ~200°C or 392°F) (Billone et al. 2013, 2013).

NRC ISG-24, "The Use of Demonstration Program as Confirmation of Integrity for Continued Storage of High Burnup Fuel Beyond 20 Years," provides information for the storage of HBF for periods greater than 20 years; it supplements the aging management guidance given in NUREG-1927. It specifies that the applicant may use the results of a completed or an ongoing demonstration, in conjunction with an actively updated AMP, as an acceptable means for confirming that the canister or cask contents satisfy the applicable regulations. Since limited AMP action can be taken inside a sealed canister, the AMP must ensure that the TLAA associated with the aging degradation phenomenon for HBF cladding integrity is updated with new information as it becomes available. NRC ISG-24 specifies the general requirements for a demonstration program for storage of HBF beyond 20 years, to support a license or Certificate of Compliance (CoC) application.

NRC ISG-24 further specifies that the TLAA and AMP should be periodically reevaluated and updated whenever new data from the demonstration or other short-term tests or modeling indicate potential degradation of the fuel or deviation from the assumptions of the TLAA or AMP. The updated TLAA and AMP should be submitted to the NRC for review and approval, and will be subject to inspection.

Canister/Cask Confinement:

ISG-15, "Materials Evaluation," provides specific guidance for evaluating material-related issues for storage canisters/casks under normal, off-normal, and accident conditions. It also provides guidance to ensure an adequate margin of safety in the design basis of the storage canister/cask.

Retrievability:

ISG-2, "Fuel Retrievability," provides guidance for determining whether the storage canister design satisfies the requirements of 10 CFR 72.122(l) that "storage systems must be designed to allow ready retrieval of used fuel . . . for further processing or disposal," and of 10 CFR 72.236(m) that ". . . consideration should be given to compatibility with removal of the stored used fuel from a reactor site, transportation, and ultimate disposal by the Department of Energy." Thus, this guidance defines ready retrieval of used fuel as the ability to move the canister containing the fuel to either a transportation package or a location where the fuel can be removed, while maintaining the ability to handle individual fuel assemblies or canned fuel assemblies by normal means.

3. ***Parameters Monitored or Inspected:*** The program monitors temperatures and radiation levels at selected locations on the surface of a select sample of used-fuel storage canisters/casks. The results are used to establish baseline data trends under normal operating conditions and to validate and benchmark the estimated data trends obtained from thermal and radiation analyses. In a manner consistent with the guidance of NRC ISG-24, the applicant may use the results of a completed demonstration program or an ongoing demonstration program of HBF storage to update the data trends obtained in this program, if the conditions of the demonstration program meet the requirements of NRC ISG-24 described above in element 2, "Preventive Action."

   Any significant deviation from the established data trends is evaluated for potential degradation of the functional and structural integrity of the canister/cask internals. For example, substantial helium leakage is likely to result in significant deviation in the temperature data, and a breach in the fuel cladding would cause a change in radiation levels. However, for most scenarios, degradation of the basket assembly is unlikely to cause a measurable change in temperature or radiation. Consequently, the radiation and temperature monitoring activity should be supplemented with an industry effort to develop for high-burnup used fuel, a database on inspection results of canisters and casks internals. Such opportunistic inspections should be conducted on canisters/casks that become available due to confinement boundary integrity issues and require repackaging.

   The sample size of the temperature and radiation monitoring program is based on an assessment of conformance with the guidance of NRC ISG-11 and ISG-24, length of time in service, design configuration, decay heat load during normal operation, abnormal conditions during service, and operating experience. Canisters or casks that were loaded before the publication of NRC ISG-11 should be included in the sample. The sample should also consider the canisters that may have had design modifications made without prior NRC approval in accordance with 10 CFR 72.48.

   The program also includes periodic calibration of electronic circuitry associated with the monitoring devices, as specified in 10 CFR 72.44(c)(3)(ii), and periodic evaluation of data sufficient to identify anomalous trends that could indicate degraded instrumentation or degradation in the cask system. All external components in the temperature and radiation measurement devices, such as sensing elements, should be periodically inspected and calibrated to ensure that no degradation due to corrosion, wear, or cracking has occurred.

4. ***Detection of Aging Effects:*** Since limited AMP action can be taken inside a sealed canister/cask, this program relies on continuous monitoring of radiation and temperature at select locations on the surface of the canister/cask to assess potential aging degradation of the canister/cask internals (i.e., used-fuel assemblies and the basket assembly). Furthermore, as discussed in NRC ISG-24, although there is no evidence to suggest that HBF cannot be stored beyond 20 years, data supporting readily retrievable storage of HBF beyond 20 years are not presently available for the time periods used to support retrievability and storage of low-burnup fuel. Therefore, this program recommends an industry effort to develop for high-burnup used fuel, a database on inspection results of canister and cask internals to detect aging effects such

as corrosion, creep, distortion, cracking, warping, and peeling of laminates to ensure retrievability and transportation of used fuel assemblies after extended long-term storage. Additional details are discussed above in Element 3, Parameters Monitored or Inspected.

This program includes measurement of temperature and gamma and neutron dose rates (mrem/h) and the total dose rate (mrem/h) at selected key locations such as cask top surface (lid center) or cask side surface (e.g., peak burnup section of the fuel). At each location, any deviations in temperature and dose rates from the data trends established for that location under normal operating conditions are evaluated to determine possible aging degradation of either the fuel assemblies or the basket assembly. Note that temperature and dose rate limit data trends will be significantly different for each location.

To ensure that the temperature and radiation monitoring devices will remain accurate during extended long-term storage at the ISFSI, the devices should be periodically calibrated in accordance with plant quality assurance (QA) requirements.

5. ***Monitoring and Trending:*** The data trends for temperature and radiation monitoring should be established such that deviations in the measurement caused by a faulty measurement device are easily distinguished from those caused by aging degradation of the canister/cask internals. Qualified personnel should periodically review the temperature and radiation data in accordance with 10 CFR 72.158. The data should be compared to baseline or predicted data trends and appropriate actions should be taken if any abnormal readings are noted. A review of temperature and radiation trends should detect an instrument problem before there is an actual temperature problem involving the canister/cask.

6. ***Acceptance Criteria:*** This program monitors temperature and radiation dose rates at select locations on the surface of the storage canister/cask to first establish the data trends under normal operating conditions. At each location, any deviations in temperature and dose rates from these data trends are evaluated to determine possible aging degradation of either the fuel assemblies or the basket assembly. A deviation from the temperature trend curve established under normal operating conditions is indicative of a helium gas leak. The results of the AMPs in Sections IV.M3 or IV.M4 should be examined for further assessment. Increased levels of neutron dose rate could indicate degradation of neutron-shielding materials, and increased levels of gamma radiation dose rate could indicate degradation of gamma shielding materials. They could also indicate a breach in the containment boundary of the canister/cask due to aging effects, such as cracking due to stress corrosion cracking or cyclic loads. The TLAAs in Sections III.4, “Time-Dependent Degradation of Neutron-Absorbing Materials,” and III.5, “Time-Dependent Degradation of Radiation-Shielding Materials,” should be reviewed to determine whether degradation of the neutron-absorbing or gamma-shielding material is responsible for these changes.

7. ***Corrective Actions:*** Site QA procedures, review and approval processes, and administrative controls are implemented in accordance with the requirements of 10 CFR Part 72, Subpart G, and, for not important-to-safety structures and components

subject to an aging management review, 10 CFR Part 50, Appendix B. As discussed in the appendix to this report, these requirements are found to be acceptable to address the corrective actions, confirmation process, and administrative controls.

8. ***Confirmation Process***: See element 7, above.

9. ***Administrative Controls***: See element 7, above.

10. ***Operating Experience:*** Operating experience at existing ISFSI sites indicates that if there are multiple air inlets and outlets in a canister with overpack, measured temperatures can vary significantly between them because of wind and weather conditions. Any difference in temperature reading between the air inlets/outlets should be addressed in the ISFSI surveillance procedure.

    NRC IN 2011–10 identified thermal issues during loading of used-fuel assemblies into an MPC within a transfer cask and vacuum drying. The operation was left unattended for the evening, and a cooling system, which circulated water in the annulus between the canister and transfer cask to keep cladding temperatures below allowable limits, was found to be inoperable the next morning. Although the thermal evaluation showed that the cladding temperature limit was not exceeded during the absence of cooling, the NRC conducted a reactive team inspection at the utility site in September 2010, and the issues were also addressed during a design and QA inspection of the cask vendor in October 2010. NRC RSI 2006–22 discusses lessons learned from a dry cask storage campaign that included operational insight regarding the time limit established for the vacuum drying in the technical requirements of the CoC of a dry cask design. A change in the sequence of operations that allowed the temperature of the fuel cladding to increase beyond the initial temperature of 102°C (215°F), assumed in the basis of the SAR, would result in a shorter vacuum drying time than that specified in the technical requirements.

IV.M5.3 References

10 CFR Part 50, Appendix B, Quality Assurance Criteria for Nuclear Power Plants, Nuclear Regulatory Commission, 1–1–12 Edition, 2012.

10 CFR Part 71, Packaging and Transportation of Radioactive Material, Nuclear Regulatory Commission, 1–1–12 Edition, 2012.

10 CFR 71.43, General Standards for All Packages, Nuclear Regulatory Commission, 1–1–12 Edition, 2012.

10 CFR 71.51, Additional Requirements for Type B Packages, Nuclear Regulatory Commission, 1–1–12 Edition, 2012.

10 CFR 71.55, General Requirements for Fissile Material Packages, Nuclear Regulatory Commission, 1–1–12 Edition, 2012.

10 CFR Part 72, Subpart G, Quality Assurance Criteria for the Independent Storage of Spent Nuclear Fuel, High-Level Radioactive Waste, and Reactor Related Greater Than Class C Waste, Nuclear Regulatory Commission, 1–1–12 Edition, 2012.

10 CFR 72.44, License Condition, Nuclear Regulatory Commission, 1–1–12 Edition, 2012.

10 CFR 72.48, Changes, Tests, and Experiments, Nuclear Regulatory Commission, 1–1–12 Edition, 2012.

10 CFR 72.122, Overall Requirements, Nuclear Regulatory Commission, 1–1–12 Edition, 2012.

10 CFR 72.158, Control of Special Processes, Nuclear Regulatory Commission, 1–1–12 Edition, 2012.

10 CFR 72.236, Specific Requirements for Spent Fuel Storage Cask Approval and Fabrication, Nuclear Regulatory Commission, 1–1–12 Edition, 2012.

Billone M.C., Burtseva, T.A., and Einziger, R.E., Ductile-to-Brittle Transition Temperature for High-Burnup Cladding Alloys Exposed to Simulated Drying-Storage Conditions, J. Nucl. Mater. 433: 431–448 (2013).

Billone M.C., Burtseva, T.A., and Liu, Y.Y., Baseline Properties and DBTT of High-Burnup PWR Cladding Alloys, Proc. 17th Intl Symp. on Packaging and Transportation of Radioactive Materials, PATRAM 2013, San Francisco, CA, August 18-23, 2013.

NRC IN 2011–10, Thermal Issues Identified during Loading of Spent Fuel Storage Casks, Information Notice, Nuclear Regulatory Commission, Washington, DC, May 2, 2011.

NRC ISG-2, Fuel Retrievability, Revision 1, Interim Staff Guidance, Nuclear Regulatory Commission, Washington, DC, February 2010.

NRC ISG-11, Cladding Considerations for the Transportation and Storage of Spent Fuel, Revision 3, Interim Staff Guidance, Nuclear Regulatory Commission, Washington, DC, November 2003.

NRC ISG-15, Materials Evaluation, Interim Staff Guidance, Nuclear Regulatory Commission, Washington, DC, January 2001.

NRC ISG-18, The Design and Testing of Lid Welds on Austenitic Stainless Steel Canisters as the Confinement Boundary for Spent Fuel Storage, Revision 1, Interim Staff Guidance, Nuclear Regulatory Commission, Washington, DC, October 2008.

NRC ISG-24, The Use of a Demonstration Program as Confirmation of Integrity for Continued Storage of High Burnup Fuel Beyond 20 Years, Interim Staff Guidance, Nuclear Regulatory Commission, Washington, DC, ADAMS ML14058B166, July 11, 2014.

NRC ISG-25, Pressure and Helium Leakage Testing of the Confinement Boundary of Spent Fuel Dry Storage Systems, Interim Staff Guidance, Nuclear Regulatory Commission, Washington, DC, August 2010.

NRC RIS 2006–22, Lessons Learned from Recent 10 CFR Part 72 Dry Cask Storage Campaign, Regulatory Issue Summary, Nuclear Regulatory Commission, Washington, DC, November 15, 2006.

NUREG-1927, Rev. 1, Standard Review Plan for Renewal of Spent Fuel Dry Cask Storage System Licenses and Certificates of Compliance, Nuclear Regulatory Commission, Washington, DC, March 2011.

Suffield, S.R., Fort, J.A., Adkins, H.E., Jr, Cuta, J.M., Collins, B.A., and Siciliano, E.R., Thermal Modeling of NUHOMS HSM-15 and HSM-1 Storage Module at Calvert Cliffs Nuclear Power Station ISFSI, FCRD-UFD-2012–000344, October 26, 2012.

V. APPLICATION OF TIME-LIMITED AGING ANALYSES AND AGING MANAGEMENT PROGRAMS

Managing aging effects on dry cask storage systems (DCSSs) for extended long-term storage and subsequent transportation consists of three steps: (a) perform a scoping evaluation to identify the structures, systems, and components (SSCs) in the Independent Spent Fuel Storage Installation (ISFSI) or DCSS that are within the scope of license renewal, their materials of construction, and the operating environments; (b) for each in-scope SSC, list the potential aging effects and degradation mechanisms; and (c) perform an aging management review (AMR) to define time-limited aging analysis (TLAAs) and comprehensive aging management programs (AMPs) that manage the aging effects for each of these SSCs. An overview of the license renewal process, scoping evaluation, and AMR is given in Chapter I of this report.

This Chapter provides a detailed description of the various DCSS designs that are being employed for used fuel storage in the United States. For each DCSS design, the applicable design codes and service life, as well as the current inspection and monitoring programs, are identified. Tables have been constructed for each design that provide an AMR of all SSCs that are determined to be within the scope of license renewal and are subject to aging effects that need to be managed to ensure that the intended functions of these SSCs will be maintained during the requested period of extended operation. These tables identify SSCs and their subcomponents by "Item," "Structure and/or Component" (with rankings of Safety Categories A, B, and C), "Intended Safety Function," "Material," "Environment," "Aging Effect/Mechanism," "AMP," and "Program Type." Each line item in the table represents a unique combination of component/material/environment/aging effect/mechanism and the TLAA or AMP for managing the aging effects such that the intended function of the component will be maintained during the period of extended operation. Separate line items are included in these AMR tables not only for SSCs that are important to safety, but also for those SSCs that may not have such a function but whose failure could affect the performance of the SSCs that are important to safety.

For a specific structure or component listed in the tables, if the AMP is consistent with the applicable requirements of 10 CFR 72 and considered to be adequate for managing the aging effects, the entry in the "Program Type" column indicates either a TLAA described in Chapter III or a generic AMP described in Chapter IV of this report. For these TLAAs and AMPs, no further evaluation is recommended for license renewal. If there is no acceptable AMP to manage the aging effects for a specific combination of component/material/ environment/aging effect/mechanism, the entry in the "Program Type" column recommends further evaluation, with details that may augment an existing AMP, or become part of a site-specific AMP. Guidance on the evaluation of TLAAs is provided in Chapter III of this report.

Chapter V includes eight DCSS designs currently employed in the United States for used fuel storage under 10 CFR 72.214. These DCSS designs are described in the following sections.

V.1 NUHOMS Dry Spent-Fuel Storage System

V.1.1 System Description

This section addresses the elements of the standardized NUHOMS horizontal cask system for dry storage of pressurized water reactor (PWR) or boiling water reactor (BWR) used nuclear fuel

assemblies (Fig. V.1-1). The NUHOMS system provides for the horizontal storage of used fuel in a dry-shielded canister (DSC), which is placed in a concrete horizontal storage module (HSM). It can be installed at any reactor site or a new site where an ISFSI is required. Each NUHOMS system model type is designated by NUHOMS-XXY. The two digits (XX) refer to the number of fuel assemblies stored in the DSC, and the character (Y) designates the type of fuel being stored, P for PWR or B for BWR. For some systems, a fourth character (T) is added, if applicable, to designate that the DSC is also intended for transportation in a 10 CFR 71-approved package. Also, two additional characters, HB, are added for systems that are used to store high-burnup fuels (e.g., NUHOMS-24PHB).

Figure V.1-1: NUHOMS horizontal dry storage systems at San Onofre (Rod McCullum, 2012).

The NUHOMS DSC is a welded canister that utilizes redundant multi-pass closure welds with no seal pressure monitoring in the system. After draining and drying, the canister is backfilled with helium to provide an inert environment.

The original system, NUHOMS-07P, was approved by the NRC in March 1986 for storage of seven used PWR fuel assemblies per DSC and HSM. The internal basket of the DSC for this system incorporates borated guide sleeves to ensure criticality safety during wet loading operations without taking credit for burnup or soluble boron. Later designs of the NUHOMS system can hold 24 or 32 or 37 PWR fuel asssemblies or 52, 61, or 69 BWR fuel assemblies. Most of the standardized canister designs utilized borated guide sleeves to ensure criticality control during wet loading operations without credit for burnup or soluble boron. However, unlike these designs, no borated neutron-absorbing material is used in the standardized NUHOMS-24P basket design; it takes credit for burnup or soluble boron in the flooded DSC during wet loading or off-loading of the fuel. The maximum heat load for the NUHOMS DSCs is in the range of 18–40.8 kW.

The storage facility is mainly divided into two elements: the DSC and the HSM. The DSC (see Fig. V.1-2) is composed of three basic components: the internal basket assembly, the shell, and the shielding plugs. They are described below.

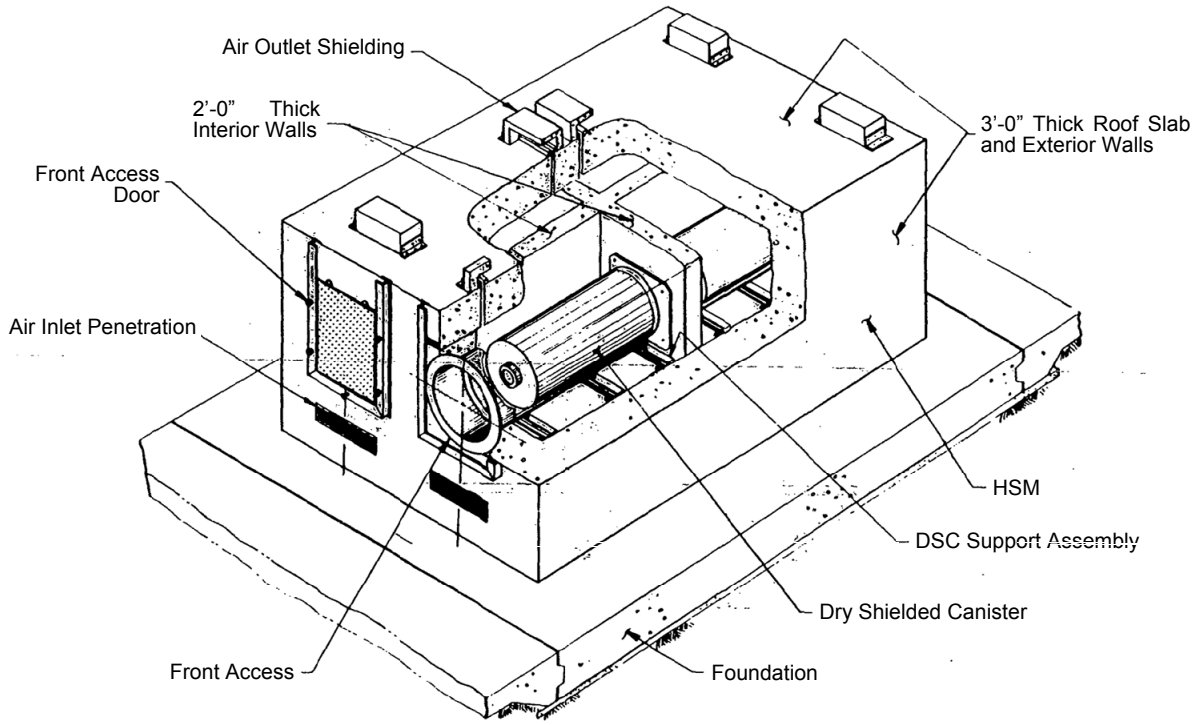

Figure V.1-2: A schematic of the NUHOMS dry storage system (NUH-002.0103 Rev. 2A, 1991).

V.1.1.1 HSM Description

The HSM is a low-profile prefabricated structure constructed from reinforced concrete and structural steel that provides protection for the DSC against tornado missiles and other potentially adverse natural phenomena, and also serves as the principal biological shield for the used fuel during storage. Major structures and systems of the HSM are the concrete structure, access door, DSC support assembly, and a totally passive ventilation system. However, the specific design details may vary for different ISFSIs. A schematic representation of the dry storage system is shown in Fig. V.1-2. The HSM is supported by a 0.91-m (3-ft)-thick partially below-grade basemat (i.e., concrete pad). Each HSM is about 6.1 m (20 ft) long, 1.7 m (9 ft) wide, and 4.6 m (15 ft) high, with 0.91-m (3-ft)-thick concrete exterior walls and roof providing neutron and gamma shielding. The interior concrete walls between adjacent HSMs are 0.61 m (2 ft) thick. Stainless steel or galvanized carbon steel or aluminum heat-shielding plates are provided between the DSC and the HSM concrete to control the peak concrete temperatures and prevent concrete degradation during the worst design thermal conditions. The heat shield plates are anchored to the ceiling and walls; the details are shown in Fig. V.1-3. Each HSM contains one DSC, and each DSC contains up to 37 PWR or 69 BWR fuel assemblies.

The HSM is not anchored to the foundation basemat. In some models the HSMs are tied together to mitigate overturning effects under accident conditions such as seismic events, using mechanical connections at the top and through wall rods at the bottom. A concrete approach pad is adjacent to the basemat for loading and retrieval of the DSCs. The approach slab is separated from the basemat

by a construction joint. The differential settlement of the basemat and the concrete approach slab is limited to ensure proper retrieval of the DSC. The HSMs are typically built in units of 20 in a 2x10 array.

A shielded air inlet opening in the lower front or side wall of the structure and shielded outlet vents in the roof, and associated pathways, are provided in each HSM for dissipation of the decay heat. The air flow diagram for a typical HSM design is shown in Fig. V.1-4. The ventilation air enters through the air inlet into a plenum formed by an interior shielding slab and a partial-height wall, and exits from horizontal and vertical openings in the plenum. The air flows around the DSC and exits through the exit vents in the HSM roof. Stainless steel inlet/outlet screens and frame are mounted at the air inlet and outlet openings of each HSM to prevent the entry of debris and birds/rodents that could compromise the heat removal capability of the HSM. Anchored concrete blocks are installed around the inlet and outlet vents for shielding purposes.

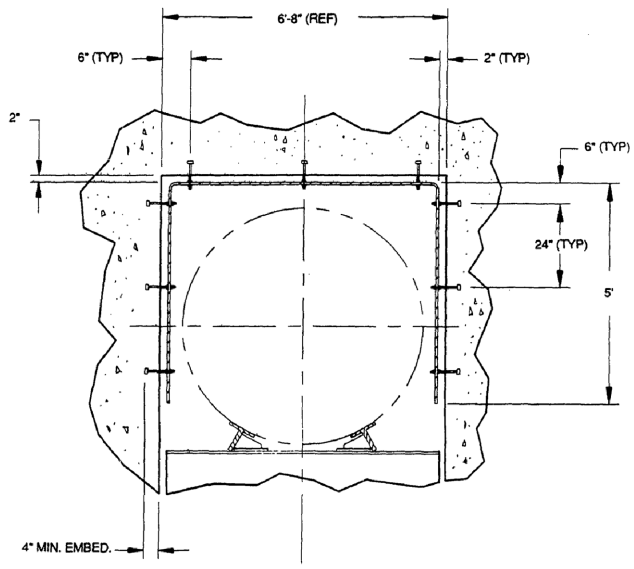

Figure V.1-3: Details of HSM heat shield (NUH-002.0103 Rev. 2A, 1991).

Each HSM has an access opening or docking flange in the front wall to accommodate transfer of DSCs from and into the shielded transfer cask. An embedded steel sleeve, with rail plates, is installed in the access opening to facilitate insertion and retrieval of the DSC into and from the HSM. The access opening is covered by a thick shielded access door. A steel frame attached to the front outside wall of the HSM supports the HSM door or the door can also be attached using embedments on the front wall.

A supporting assembly, constructed from carbon steel or stainless steel, or a carbon steel/copper alloy, structural product forms, supports the DSC inside the HSM. It consists of two rails supported at the front, rear, and mid-length by steel beams supported by six legs; the three steel beams are also anchored to the sidewalls. Figure V.1-5 shows drawings of the side elevation and end view of the typical DSC support structure inside the HSM. In some HSM designs, the rails are supported at the front and rear by attaching to the front and rear walls. In early designs, stainless steel cover plates coated with a dry film lubricant are attached to the rails to provide a sliding surface (reduced friction) for DSC insertion and retrieval. In later designs, Nitronic 60 plates are used because of this material's good high-temperature properties and resistance to oxidation, wear, and galling. Seismic restraints using steel plates or tubes are welded to the rear and front of the rails for retaining the DSC in place during seismic events. Threaded fasteners made from high-strength tempered steel are used for the DSC support assembly. A lightning protection system is also installed in the HSM. The system includes roof handrails, connectors, cable with lead shielding, and ground rods. Other items in the HSM include PVC pipes for drains and for electrical conduit, ladder and attachments, caulking, galvanized flashing, concrete nails, embedded steel plates and studs, expansion anchors, wedge anchors, and shell-type anchors.

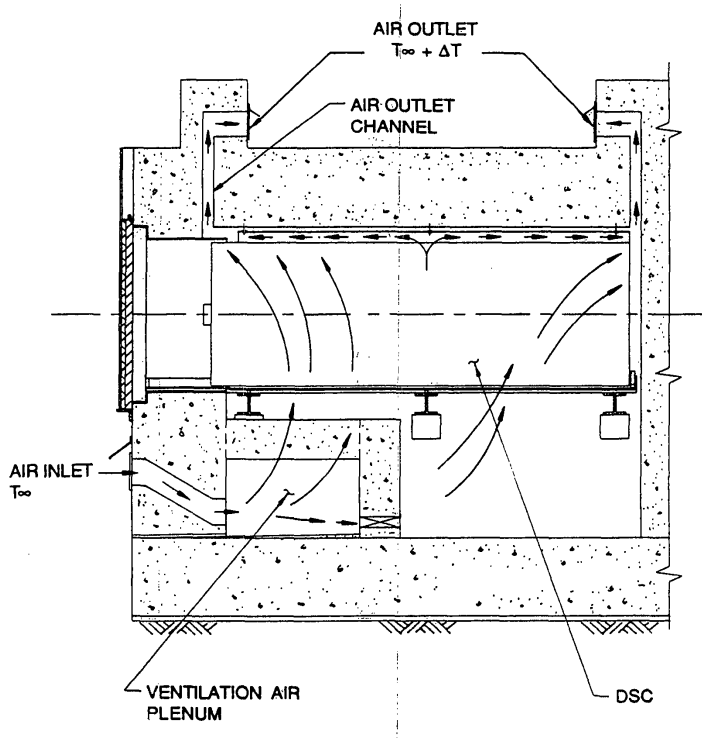

Figure V.1-4: Air flow diagram for a typical HSM design (NUH-002.0103 Rev. 2A, 1991).

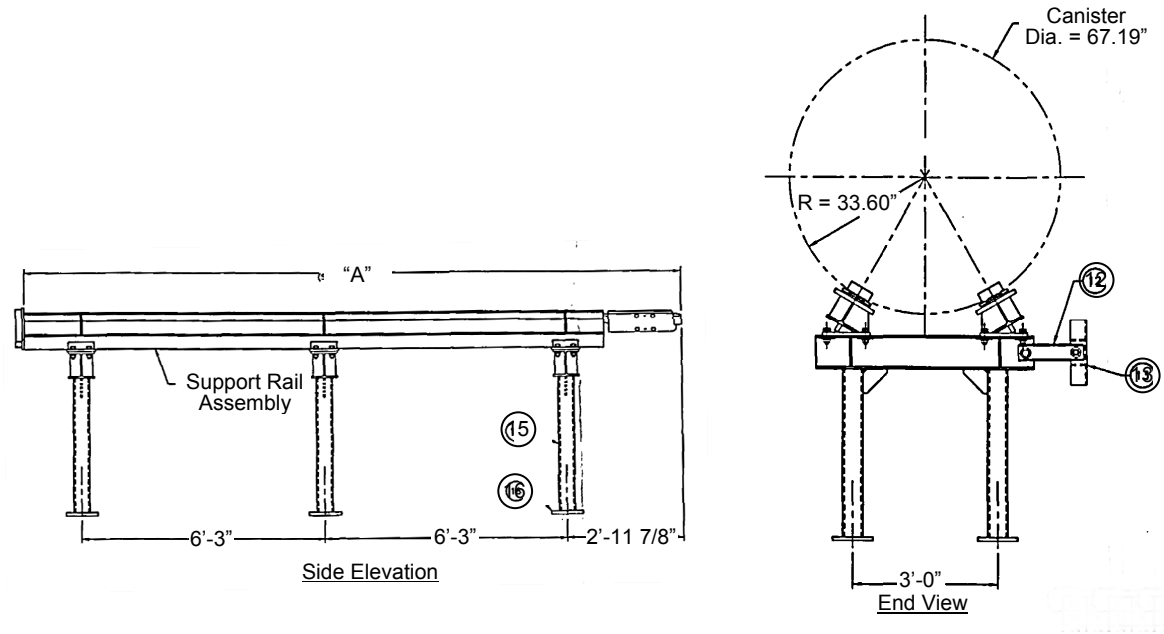

Figure V.1-5: Drawing showing the side elevation and end view of the DSC support structure (NUH-003.0103 Rev. 8, 2004).

The DSC is prevented from sliding longitudinally along the rail during a seismic event by axial seismic restraints. After placement of the DSC, a removable seismic restraint is placed into slots in the access sleeve at the front of the HSM.

V.1.1.2 DSC Basket Assembly and Shell

The basket assembly is the key component of the DSC that provides structural support and criticality control for the fuel assemblies. It is an open structure consisting of square guide sleeves or guide tubes, circular spacer discs, and support rods. The guide sleeves or fuel compartment tubes surround each of the used-fuel assemblies. The various components of the different NUHOMS DSC assembly designs are shown in Fig. V.1-6. In addition to the differences in the type and number of fuel assemblies stored in each canister, there are some minor differences in the configurations and designs of the different canisters. Most of the canister designs utilize borated aluminum or boron carbide/aluminum alloy plate or BORAL composite neutron-absorbing material (poison) for necessary criticality control and heat conduction paths from the fuel assemblies to the canister shell. Aluminum plates are also used in some designs as heat conduction paths. The NUHOMS-24P design, however, does not utilize borated guide sleeves for criticality safety.

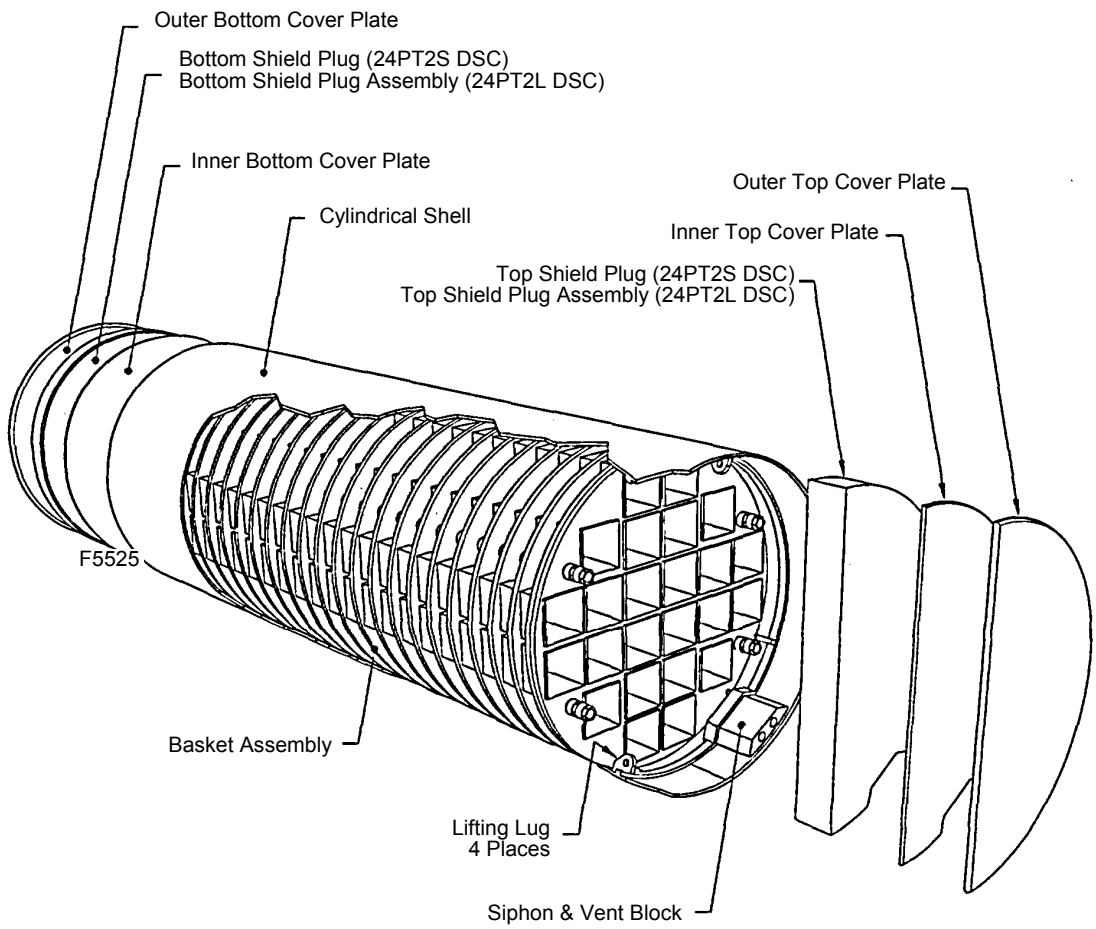

NUHOMS-24PT2

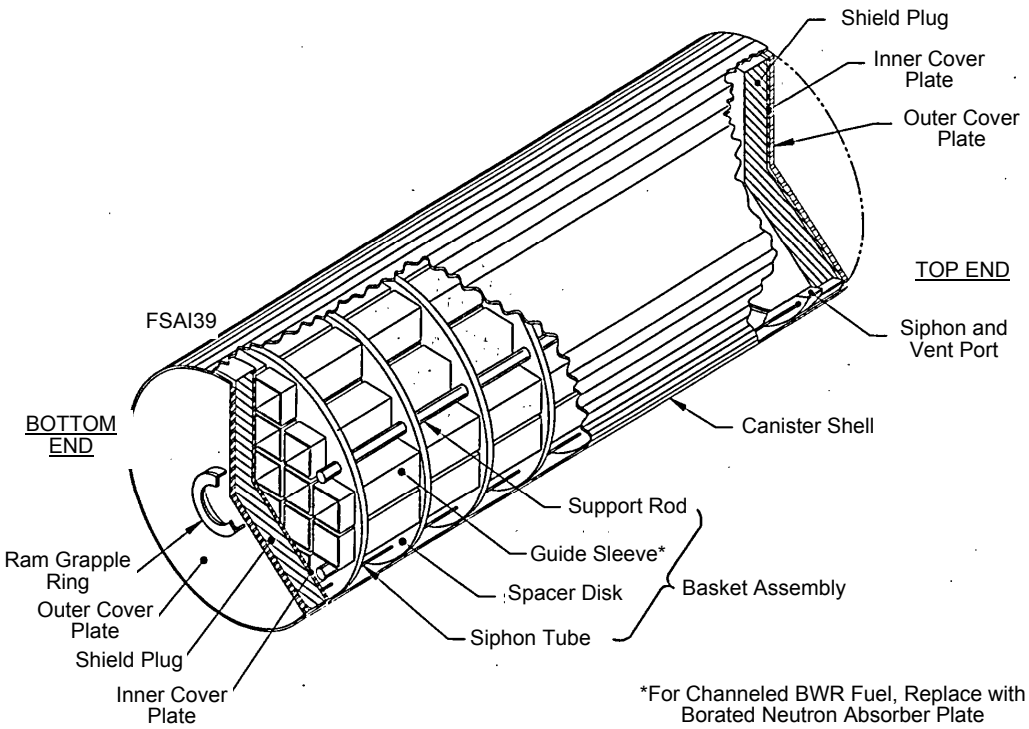

NUHOMS-24PHB

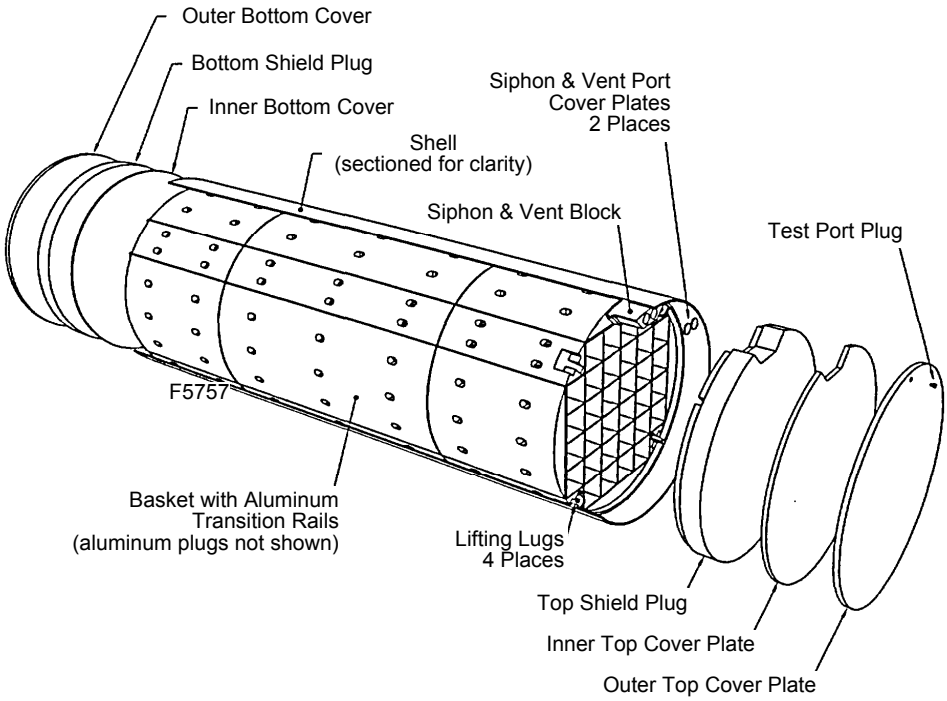

NUHOMS-32PT

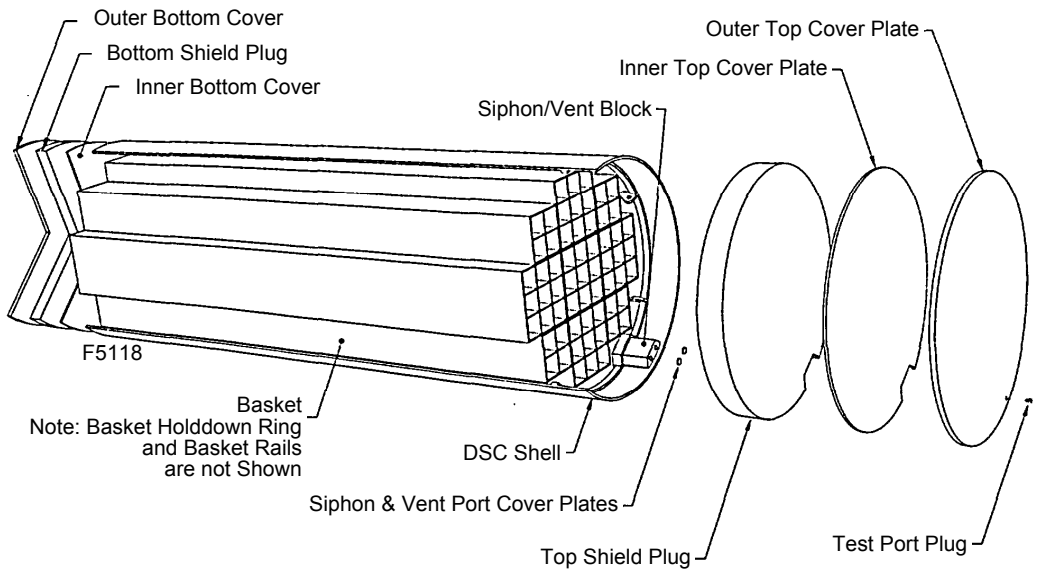

NUHOMS-61BT

Figure V.1-6: Components of the various NUHOMS DSC assembly designs (figure begins on page V.1-6) (NUH-003.0103 Rev. 8, 2004).

Also, in the NUHOMS-24P canister design, square "over sleeves" are placed over the 12 interior guide sleeves at the ends (i.e., the open span between the 1st and 2nd spacer discs, and also between the 7th and 8th spacer discs). In the NUHOMS-32PT canister design, the space between the fuel compartment grid assembly and the DSC shell is bridged by a transition rail structure. The transition rail consists of solid aluminum segments that transfer mechanical loads to the DSC shell, support the fuel assembly grid, and provide a thermal conduction path from the fuel assemblies to the canister shell wall. The fuel assembly grid in the NUHOMS-61BT canister consists of five compartments of nine guide sleeves/tubes each and four compartments of four guide sleeves/tubes each. Welded boxes that also retain the neutron absorber plates between the compartments hold the four- or nine-sleeve compartments together. The five 3x3 compartments are arranged in a cross, and the 2x2 compartments are located at the four corners. These fuel compartments are held in place by basket rails and the hold-down ring. Also, damaged fuel is stored in the four 2x2 corner compartments. End caps are installed on both ends of the 16 guide sleeves that hold damaged fuel assemblies. The 37PTH basket design is similar to the 32PT and the 69BTH basket design is similar to the 61BTH.

The majority of the components in the DSC basket assembly are made of stainless steel, and a few components are made of aluminum alloys. In some designs, carbon steel with an aluminum coating is also used for spacer discs and support rods. The DSC shell (body) is a stainless steel cylinder that consists of a rolled and welded plate that is 12.7–15.9 mm (0.5–0.625 in.) thick. The DSC shell serves as a portion of the confinement boundary.

V.1.1.3 Shell Top and Bottom Inner and Outer Cover Plates and Shield Plugs

The inner and outer top cover plates are welded to the shell to provide the redundant seal confinement boundary. Shield plugs (sometimes combined with an inner top or bottom cover plate) are provided at both ends of each DSC for biological shielding. The bottom end shielding consists of

stainless steel inner plate and outer plate, which encapsulates the lead shielding material in the "long-cavity design." The long-cavity DSC design is used to accommodate used-fuel assemblies with control components. The "short-cavity design" uses a thick carbon steel plate for shielding and is utilized to store used fuel without control components.

In some designs, the top shielding plug is welded to the DSC shell to form the inner confinement barrier. In later designs, the top shielding plug was revised to a 2-piece version that consists of an aluminum-coated carbon steel shield plug and a stainless steel inner cover plate placed on top of the shield plug. The inner cover plate is welded to the shell to form an inner confinement barrier. In the "short cavity" version, the top shielding plug consists of a thick aluminum-coated carbon steel plate. The pressure and confinement boundaries for NUHOMS-32PT DSC are shown in Fig. V.1-7. All designs do not include the helium leak test port plug. A stainless steel top cover plate is placed on top of the top shielding plug to provide a redundant confinement boundary after the drying and helium backfill operations are complete. The top cover plate is welded to the DSC shell. Also, a rolled ring is attached to the bottom cover for handling purposes during insertion and retrieval of the DSC.

V.1.1.4 Vent and Siphon Ports

Each DSC has two stainless steel penetration ports at the siphon and vent block for venting and draining the canister before it is sealed (Fig. V.1-7). Vent and siphon (or drain) penetration ports open to the DSC interior just below the top shielding plug. The siphon penetration incorporates a tube that continues to the bottom of the DSC interior cavity. Prior to installation of the top cover plate, the penetrations are sealed, by welding, as portions of the confinement barrier.

V.1.2 Design Codes and Service Life

The DSCs are designed, fabricated, and inspected in accordance with ASME Boiler and Pressure Vessel Code rules for Class 1 components and core support structures (Section III, Subsections NB and NG). The HSM is designed in accordance with the ACI-349 Code, including load combination (dead load, live loads, and temperature). The DSC support structures and other miscellaneous structural steel for the HSMs are designed, fabricated, and constructed in accordance with the AISC Code. The thermal cycling analysis of the HSM concrete and DSC support structure is based on one cycle per day or 18,250 cycles for a 50-year service life. The original fatigue analyses of the DSC shell (in accordance with ASME Code Section III NB-3222.4) and DSC support structure (in accordance with ASME Code Section III NF-3331.1) indicate that no consideration of fatigue is required for the 50-year service life.

The heat generation is limited to 0.3–1.2 kW per fuel assembly or 18–24 kW per canister. For example, on the basis of storage of 24 PWR assemblies per DSC with a nominal burnup of 40,000 MWD/MTU, an initial enrichment of 4.0 wt. % U-235 and a nominal decay period of ten years yield a thermal load of 0.66 kW/assembly. The passive cooling system of the HSM is designed to ensure that peak cladding temperatures are less than 340°C (644°F) during long-term storage for average normal ambient temperatures of 21°C (70°F). The design temperature is 204.4°C (400°F) for the DSC internal structures and 119°C (247°F) at the DSC outside surface under normal operating conditions (i.e., assuming 21°C [70°F] ambient air). The highest temperature is at the top surface of the DSC.

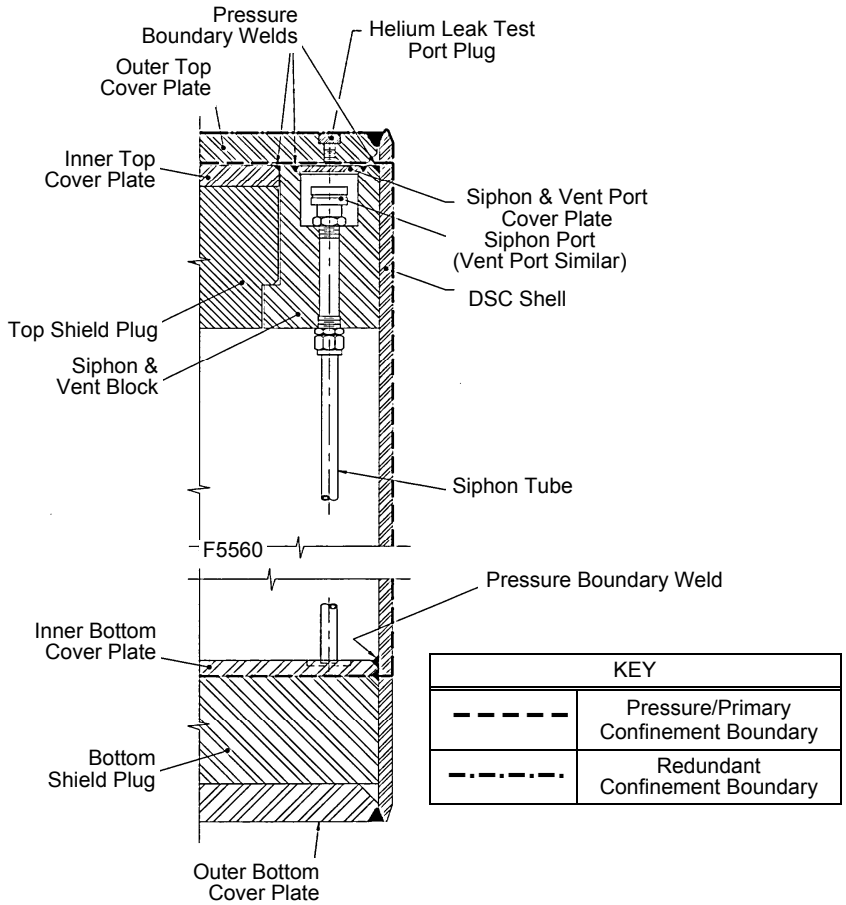

Figure V.1-7: Pressure and confinement boundaries for NUHOMS-32P1-T DSC (NUH-003.0103 Rev. 8, 2004).

The DSC is designed for a maximum dose rate of 200 mrem/h at the surface of the top and bottom end shielding plugs. The HSM is designed for an average dose rate of 20 mrem/h at the surface of the module, decreasing to a negligible level at the site boundary.

The estimated gamma dose at the inner surface of the BISCO NS-3 neutron shield encased in the access door of the NUHOMS-24 system at the Oconee ISFSI has been calculated to be approximately 1.8×10^5 rads for a service life of 60 years. This compares to a service limit of about 1.5×10^{10} rads for BISCO NS-3. The stated service life of 60 years corresponds to the 20-year initial license term for this ISFSI plus the 40-year requested period of extended operation. It should be noted that the initial design life of the NUHOMS-24 DCS system is 50 years. The estimated integrated neutron fluence in the HSM concrete has been calculated to be about 1.44×10^{14} n/cm^2 for a service life of 60 years (service limits for concrete for fast and thermal neutron exposure are 1.6×10^{17} and 1.5×10^{19} n/cm^2, respectively). (SER 72-04)

V.1.3 Existing Inspection and Monitoring Program

The current AMP for the NUHOMS system includes the concrete and steel members associated with the HSMs. The purpose of the AMP is to ensure that no significant aging degradation is occurring to

the HSMs and that the air inlets and outlets are free from blockage. The program involves monitoring the interior and exterior surfaces of the HSMs. Visual visual inspection of the accessible concrete surfaces, any exposed steel subcomponents, embedments, and attachments, and lightning protection system is performed at an established frequency, but not to exceed 10 years (typically 5 years). The above grade exterior concrete is considered a leading indicator for the interior concrete. The program includes visual examination of the below grade inaccessible concrete if it is exposed due to excavation for other maintenance activities.

The interior components of several HSMs have been inspected remotely using a camera and/or fiber optic technology. The access doors of these HSMs were removed for inspection of the interior components. In addition, the concrete approach pads and storm water drainage systems have also been examined for aging degradation.

The current program also includes daily surveillances of the air inlets and outlets to ensure no obstruction occurs that could potentially overheat the components inside the HSM and the concrete structures. Facility procedures are in place for these inspections and surveillances.

In addition, the current program includes monitoring of area radiation levels for compliance with dose limits. Increased levels could indicate a breach of the confinement barriers of the DSC. Dose rates are measured at predetermined HSM locations.

The TLAAs and AMPs to manage aging effects for specific structures and components, materials of construction, and environments of the NUHOMS HSM, DSC, basemat (pad) and approach slab are given in Tables V.1.A, V.1.B, and V.1.C, respectively. In these tables, the DCSS components listed in the “Structure and/or Component” column are classified as “A”, “B”, or “C” according to importance to safety, as described in Section I.2 of this report.

V.1.4 References

10 CFR Part 71, Packaging and Transportation of Radioactive Material, Nuclear Regulatory Commission, 1-1-12 Edition 2012.

10 CFR Part 72, Licensing Requirements for the Independent Storage of Spent Nuclear Fuel, High-Level Radioactive Waste, and Reactor-Related Greater than Class C Waste, Nuclear Regulatory Commission, 1-1-12 Edition 2012.

10 CFR 72.214, List of Approved Spent Fuel Storage Casks, Nuclear Regulatory Commission, 1-1-12 Edition 2012.

ACI 349.3R-02, Evaluation of Existing Nuclear Safety-Related Concrete Structures, American Concrete Institute, Farmington Hills, MI, 2002.

AISC Manual of Steel Construction, 8th Edition, American Institute of Steel Construction, Chicago, Illinois, 1980.

ASME Boiler and Pressure Vessel Code, Section III, Rules for Construction of Nuclear Power Plant Components, Division 1, Subsection NB, Class 1 Components, American Society for Mechanical Engineers, New York, 2004.

ASME Boiler and Pressure Vessel Code, Section XI, Inservice Inspection of Nuclear Power Plant Components, American Society of Mechanical Engineers, New York, 2004.

ASTM C33–90, Standard Specification for Concrete Aggregates, American Society for Testing and Materials, West Conshohocken, PA, 1990.

ASTM C295/C295M–12, Standard Guide for Petrographic Examination of Aggregates for Concrete, American Society for Testing and Materials, West Conshohocken, PA, 2012.

Jana, D., and Tepke, D., Corrosion of Aluminum Metal in Concrete – A Case Study, Proceedings of the 32nd Conference on Cement Microscopy, ICMA, New Orleans, Louisiana, March 2010. Retrieved from http://www.cmc-concrete.com/ publication link on February 28, 2013.

McCullum, R., An Over view of Dry Cask Storage, Nuclear Energy Institute, Washington, DC October 19, 2012.

NUH-002.0103 Rev. 2A, Topical Report for the NUTECH Horizontal Modular Storage System for Irradiated Nuclear Fuel NUHOMS-24P, Volume I, Pacific Nuclear Fuel Services, Inc., San Jose, CA, April 1991.

NUH-002.0103 Rev. 2A, Topical Report for the NUTECH Horizontal Modular Storage System for Irradiated Nuclear Fuel NUHOMS-24P, Volume I, Pacific Nuclear Fuel Services, Inc., San Jose, CA, April 1991.

NUH-003.0103 Rev. 8, Standardized NUHOMS Modular Storage System for Irradiated Nuclear Fuel, Final Safety Analysis Report, Volume 1 and 3 (Appendix M), Transnuclear Inc., Hawthorne, NY, June 2004.

NUREG-1557, Summary of Technical Information and Agreements from Nuclear Management and Resources Council Industry Reports Addressing License Renewal, Nuclear Regulatory Commission, Washington, DC, 1991.

NUREG-1927, Standard Review Plan for Renewal of Independent Spent Fuel Storage Installation Licenses and Dry Cask Storage System Certificates of Compliance, U.S. Nuclear Regulatory Commission, Washington, DC, March 2011.

SER 72-04, Safety Evaluation Report, Docket No. 72-04, Duke Power Company, LLC Oconee Nuclear Station Independent Spent Fuel Storage Installation, License No., SNM-2503, License Renewal (ML091520159), December 2010.

Table V.1.A NUHOMS Dry Spent-Fuel Storage: Horizontal Storage Module (HSM)

Item	Structure and/or Component[1]	Intended Function[2]	Material	Environment	Aging Effect/ Mechanism	Aging Management Program (AMP)	Program Type
V.1.A-1	Concrete: HSM walls, roof, and floor; inlet and outlet vents shielding blocks[3] (A)	RS, SS, HT	Reinforced Concrete	Air – inside the module, uncontrolled; Air – outdoor	Cracking due to expansion from reaction with aggregates; Increase in porosity/permeability, cracking, or loss of material (spalling, scaling) due to aggressive chemical attack; Loss of material (spalling, scaling) and cracking due to freeze-thaw; Cracking, loss of bond, and loss of material (spalling, scaling) due to corrosion of embedded steel; Increase in porosity and permeability, or loss of strength due to leaching of calcium hydroxide and carbonation; Cracking and distortion due to increased stress level from settlement; Loss of strength due to concrete interaction with aluminum	IV.S1, "Concrete Structures Monitoring Program" Note: Further evaluation may be required for the following aging effects/mechanisms: • Loss of material (spalling, scaling) and cracking due to freeze-thaw; • Cracking due to expansion from reaction with aggregates; • Loss of strength due to concrete interaction with aluminum; • Reduction of strength and degradation of shielding performance of concrete due to elevated temperature (>150°F general, >200°F local) and long-term exposure to gamma radiation. (See line items V.1.A-2 to -5 for details)	Generic program

Table V.1.A NUHOMS Dry Spent-Fuel Storage: Horizontal Storage Module (HSM)

Item	Structure and/or Component[1]	Intended Function[2]	Material	Environment	Aging Effect/ Mechanism	Aging Management Program (AMP)	Program Type
V.1.A-2	Concrete: HSM walls, roof, and floor; inlet and outlet vents shielding blocks[3] (A)	RS, SS, HT	Reinforced Concrete	Air – inside the module, uncontrolled; Air – outdoor	Loss of material (spalling, scaling) and cracking due to freeze-thaw	Further evaluation is required for facilities that are located in moderate to severe weathering conditions (weathering index >100 day-inch/yr) (NUREG-1557) to determine if a site-specific AMP is needed. A site-specific AMP is not required if documented evidence confirms that the existing concrete had air entrainment content (as per Table CC-2231-2 of the ASME Code, Section III Division 2), and subsequent inspections of accessible areas did not reveal degradation related to freeze-thaw. Such inspections should be considered a part of the evaluation. If this condition is not satisfied, then a site-specific AMP is required to manage loss of material (spalling, scaling) and cracking due to freeze-thaw of concrete in inaccessible areas. The weathering index for the continental United States is shown in ASTM C33-90, Fig. 1.	Further evaluation, for facilities located in moderate to severe weathering conditions
V.1.A-3	Concrete (inaccessible areas): HSM walls, roof, and floor; inlet and outlet vents shielding blocks[3] (A)	RS, SS, HT	Reinforced Concrete	Air – inside the module, uncontrolled, radiation and elevated temperature	Cracking due to expansion from reaction with aggregates	Further evaluation is required to determine if a site-specific AMP is needed to manage cracking and expansion due to reaction with aggregate of concrete in inaccessible areas. A site-specific AMP is not required if (1) as described in NUREG-1557, investigations, tests, and petrographic examinations of aggregates per ASTM C295 and other ASTM reactivity tests, as required, can demonstrate that those aggregates do not adversely react within concrete, or (2) for potentially reactive aggregates, aggregate concrete reaction is not significant if it is demonstrated that the in-place concrete can perform its intended function.	Further evaluation to determine whether a site-specific AMP is needed
V.1.A-4	Concrete (inaccessible areas): HSM walls, roof, and floor; inlet and outlet	RS, SS, HT	Reinforced Concrete	Air – inside the module, uncontrolled, radiation and	Loss of strength due to concrete interaction with aluminum	Further evaluation is required to determine if a site-specific AMP is needed to manage loss of strength due to concrete interaction with aluminum in inaccessible areas. This is particularly	Further evaluation to determine whether a site-

Table V.1.A NUHOMS Dry Spent-Fuel Storage: Horizontal Storage Module (HSM)

Item	Structure and/or Component[1]	Intended Function[2]	Material	Environment	Aging Effect/ Mechanism	Aging Management Program (AMP)	Program Type
	vents shielding blocks[3] (A)			elevated temperature		true when embedded aluminum components without protective coatings are used in combination with steel embedded in concrete (Jana and Tepke 2010).	specific AMP is needed
V.1.A-5	Concrete: HSM walls, roof, and floor; inlet and outlet vents shielding blocks[3] (A)	RS, SS, HT	Reinforced Concrete	Air – inside the module, uncontrolled, radiation and elevated temperature	Reduction of strength and degradation of shielding performance of concrete due to elevated temperature (>150°F general, >200°F local) and long-term exposure to gamma radiation	The compressive strength and shielding performance of plain concrete are maintained by ensuring that the minimum concrete density is achieved during construction and the allowable concrete temperature and radiation limits are not exceeded. The implementation of 10 CFR 72 requirements and ASME Code Section XI, Subsection IWL, would not enable identification of the reduction of strength due to elevated temperature and gamma radiation. Thus, for any portions of concrete that exceed specified limits for temperature and gamma radiation, further evaluations are warranted. For normal operation or requested period of extended operation, Subsection CC-3400 of ASME Code Section III, Division 2, specifies that the concrete temperature limits shall not exceed 66°C (150°F) except for local areas, such as around penetrations, which are not allowed to exceed 93°C (200°F). Also, a gamma radiation dose of 10^{10} rads may cause significant reduction of strength. If significant equipment loads are supported by concrete exposed to temperatures exceeding 66°C (150°F) and/or gamma dose above 10^{10} rads, an evaluation is to be made of the ability to withstand the postulated design loads. Higher temperatures than given above may be allowed in the concrete if tests and/or calculations are provided to evaluate the reduction in strength and modulus of elasticity and these reductions are applied to the design calculations.	Further evaluation, if temperature and gamma radiation limits are exceeded

Table V.1.A NUHOMS Dry Spent-Fuel Storage: Horizontal Storage Module (HSM)

Item	Structure and/or Component[1]	Intended Function[2]	Material	Environment	Aging Effect/ Mechanism	Aging Management Program (AMP)	Program Type
V.1.A-6	Moisture barriers (caulking, sealants, and expansion joint fillers) (C)	SS Not ITS	Elastomers, rubber and other similar materials	Air – outdoor	Loss of sealing due to wear, damage, erosion, tear, surface cracks, or other defects	IV.M1, "External Surfaces Monitoring of Mechanical Components"	Generic program
V.1.A-7	Storm drainage system (drain pipes and other components) (C)	SS Not ITS	PVC and other materials	Air – outdoor	Loss of drainage function due to blockage, wear, damage, erosion, tear, cracks, or other defects	IV.M1, "External Surfaces Monitoring of Mechanical Components"	Generic program
V.1.A-8	Transfer cask docking: Flange and access opening sleeve, axial seismic restraints (B)	SS	Steel	Air – indoor, uncontrolled	Loss of material due to general, pitting, and crevice corrosion	IV.M1, "External Surfaces Monitoring of Mechanical Components"	Generic program
V.1.A-9	Heat shielding plates and anchors (B)	HT	Stainless steel, Steel	Air – inside the module	Loss of material due to general, pitting, and crevice corrosion	IV.M1, "External Surfaces Monitoring of Mechanical Components"	Generic program
V.1.A-10	DSC support structure: Structural beams, rails, plates, bolts and nuts, including welds, and various anchorages/ embedments (B)	SS	Steel, Stainless steel	Air – indoor, uncontrolled	Loss of material due to corrosion and wear; cracking	IV.M1, "External Surfaces Monitoring of Mechanical Components"	Generic program
V.1.A-11	DSC support structure: Structural beams, frames, and anchorages (B)	SS	Steel, Stainless steel	Air – indoor, uncontrolled	Cumulative fatigue damage due to cyclic loading	Fatigue is a time-limited aging analysis (TLAA) to be evaluated for the requested period of extended operation. See III.2, "Fatigue of Metal and Concrete Structures and Components," for acceptable methods for meeting the acceptance criteria in Section 3.5.1 of NUREG-1927.	TLAA

Table V.1.A NUHOMS Dry Spent-Fuel Storage: Horizontal Storage Module (HSM)

Item	Structure and/or Component[1]	Intended Function[2]	Material	Environment	Aging Effect/ Mechanism	Aging Management Program (AMP)	Program Type
V.1.A-12	Ventilation air openings: Air inlet and outlet screens and frames (A)	HT	Steel	Air – inside the module, uncontrolled or Air – outdoor	Loss of material due to corrosion and wear	IV.M1, "External Surfaces Monitoring of Mechanical Components "	Generic program
V.1.A-13	Ventilation air openings: Air inlet and outlet screens and frames (A)	HT	Steel	Air – inside the module, uncontrolled or Air – outdoor	Reduced heat convection capacity due to blockage	IV.M2, "Ventilation System Surveillance Program"	Generic program
V.1.A-14	Shielded access door: Access door support frame, access ring, and anchorages (B)	RS, SS	Steel	Air – inside the module, uncontrolled or Air – outdoor	Loss of material due to general, pitting, and crevice corrosion	IV.M1, "External Surfaces Monitoring of Mechanical Components"	Generic program
V.1.A-15	Shielded access door: Shielding material (A)	RS	BISCO NS-3	Embedded between steel plates	Degradation of shielding material due to radiation exposure	Degradation of radiation-shielding materials is a TLAA to be evaluated for the requested period of extended operation. See III.5, "Time-Dependent Degradation of Radiation-Shielding Materials," for acceptable methods for meeting the acceptance criteria in Section 3.5.1 of NUREG-1927.	TLAA
V.1.A-16	HSM/foundation basemat anchorage[4] (inaccessible area): Dowel rods (B)	SS	Steel	Air – uncontrolled (dry to wet conditions)	Loss of material due to general, pitting, and crevice corrosion	Further evaluation is required to determine if a site-specific AMP is needed to manage loss of material due to corrosion. A site-specific AMP is not required if a TLAA is performed to manage aging effects of corrosion for the requested period of extended operation. See III.3, "Corrosion Analysis of Metal Components," for acceptable methods for meeting the acceptance criteria in Section 3.5.1 of NUREG-1927.	Further evaluation to determine whether a site-specific AMP is needed

Table V.1.A NUHOMS Dry Spent-Fuel Storage: Horizontal Storage Module (HSM)

Item	Structure and/or Component[1]	Intended Function[2]	Material	Environment	Aging Effect/ Mechanism	Aging Management Program (AMP)	Program Type
V.1.A-17	Coatings (if applied) on metallic components (C)	SS Not ITS	Coating	Air – inside the module, uncontrolled or Air – outdoor	Loss of coating integrity due to blistering, cracking, flaking, peeling, or physical damage	IV.S2, "Monitoring of Protective Coating on Carbon Steel Structures"	Generic program
V.1.A-18	Lightning protection system (C)	SS Not ITS	Various materials	Air – outdoor	Loss of lightning protection due to wear, tear, damage, surface cracks, or other defects	IV.M1, "External Surfaces Monitoring of Mechanical Components"	Generic program
V.1.A-19	Handrail and bracing (B)	SS	Steel	Air – outdoor	Loss of material due to general, pitting, and crevice corrosion	IV.M1, "External Surfaces Monitoring of Mechanical Components"	Generic program
V.1.A-20	Cathodic protection systems (if applicable) (B)	Cathodic protection of reinforc-ing steel	Various materials	Air – outdoor; Embedded in concrete	Reduction of cathodic protection effect on bond strength due to degradation of cathodic protection current	IV.S1, "Concrete Structures Monitoring Program"	Generic program

1. The structures and/or components are classified according to importance to safety, as follows: A = critical to safety operation, B = major impact on safety, and C = minor impact on safety.
2. The important to safety (ITS) functions of the structures and components are as follows: CB = confinement boundary, CC = criticality control, RS = radiation shielding, HT = heat transfer, SS = structural support, and FR = fuel retrievability.
3. External precast shielding blocks are placed over HSM air outlets to reduce direct and streaming radiation dose. Internal shielding blocks are placed around air inlets to reduce direct and streaming radiation dose. The shielding blocks are anchored to the embedded base plate on roof and floor slab.
4. The HSM is anchored to the foundation slab (concrete pad) to mitigate overturning and sliding effects, using dowel rods of a size and spacing consistent with the HSM wall vertical reinforcement. The rods could be corroded by water, moisture, or aggressive chemicals through the crevices between the HSM walls and the concrete pad.

Table V.1.B NUHOMS Dry Spent-Fuel Storage: Dry Shielded Canister (DSC)

Item	Structure and/or Component[1]	Intended Function[2]	Material	Environment	Aging Effect/ Mechanism	Aging Management Program (AMP)	Program Type
V.1.B-1	DSC: Shell (including welds) (A)	CB, HT, SS, FR	Stainless steel	Air – inside the HSM (external), Helium (internal)	Cumulative fatigue damage due to cyclic loading	Fatigue is a TLAA to be evaluated for the requested period of extended operation. See III.2, "Fatigue of Metal and Concrete Structures and Components," for acceptable methods for meeting the acceptance criteria in Section 3.5.1 of NUREG-1927.	TLAA
V.1.B-2	DSC confinement boundary: Shell, outer top cover plate, outer bottom cover plate, and welds (A)	CB, HT, SS, FR	Stainless steel	Air – inside the HSM (external), Helium (internal)	Cracking and leakage due to stress corrosion cracking when exposed to moisture and aggressive chemicals in the environment	IV.M1, "External Surfaces Monitoring of Mechanical Components" IV.M3, "Welded Canister Seal and Leakage Monitoring Program"	Generic program
V.1.B-3	DSC internals: Basket assembly (spacer disks, support rods, guide sleeves, transition rail structure, basket rails and hold-down rails); Shielding plugs and inner cover plates; Vent/siphon block (A)	CC, CB, HT, RS, SS, FR	Stainless steel, aluminum-coated carbon steel, borated aluminum or boron carbide/ aluminum alloy plate or BORAL composite	Helium, radiation, and elevated temperature	Degradation of heat transfer, criticality control, radiation shield, or structural support functions of the DSC internals due to extended exposure to high temperature and radiation.	IV.M5, "Canister/Cask Internals Structural and Functional Integrity Monitoring Program" Degradation of neutron-absorbing materials is a TLAA to be evaluated for the requested period of extended operation. See III.4, "Time-Dependent Degradation of Neutron-Absorbing Materials," for acceptable methods for meeting the acceptance criteria in Section 3.5.1 of NUREG-1927.	Generic program TLAA

1. The structures and/or components are classified according to importance to safety, as follows: A = critical to safety operation, B = major impact on safety, and C = minor impact on safety.
2. The important to safety (ITS) functions of the structures and components are as follows: CB = confinement boundary, CC = criticality control, RS = radiation shielding, HT = heat transfer, SS = structural support, and FR = fuel retrievability.

Table V.1.C NUHOMS Dry Spent-Fuel Storage: Basemat (Pad) and Approach Slab (Ramp)

Item	Structure and/or Component[1]	Intended Function[2]	Material	Environment	Aging Effect/ Mechanism	Aging Management Program (AMP)	Program Type
V.1.C-1	Concrete: Basemat (pad) and approach slab (ramp) (above-grade) (B)	SS	Reinforced concrete	Air – outdoor	Cracking due to expansion from reaction with aggregates; Increase in porosity/permeability, cracking, or loss of material (spalling, scaling) due to aggressive chemical attack; Cracking and loss of material (spalling, scaling) due to freeze-thaw; Cracking, loss of bond, and loss of material (spalling, scaling) due to corrosion of embedded steel; Increase in porosity and permeability, or loss of strength, due to leaching of calcium hydroxide and carbonation; Cracking and distortion due to increased stress level from settlement.	IV.S1, "Concrete Structures Monitoring Program" Note: Further evaluation may be required to manage all of these aging effects/mechanisms for the below grade or inaccessible areas of the basemat and approach ramp (See line items V.1.C-2 to -7 for details)	Generic program

Table V.1.C NUHOMS Dry Spent-Fuel Storage: Basemat (Pad) and Approach Slab (Ramp)

Item	Structure and/or Component[1]	Intended Function[2]	Material	Environment	Aging Effect/ Mechanism	Aging Management Program (AMP)	Program Type
V.1.C-2	Concrete: Basemat (pad) and approach slab (ramp) (below-grade) (B)	SS	Reinforced concrete	Groundwater/ soil	Cracking; loss of bond; and loss of material (spalling, scaling) due to corrosion of embedded steel	For facilities with non-aggressive groundwater/soil, i.e., pH >5.5, chlorides <500 ppm, or sulfates <1500 ppm, as a minimum, consider (1) examination of the exposed portions of the below-grade concrete, when excavated for any reason, and (2) periodic monitoring of below-grade water chemistry, including consideration of potential seasonal variations. For facilities with aggressive groundwater/soil (i.e., pH <5.5, chlorides >500 ppm, or sulfates >1500 ppm), and/or where the concrete structural elements have experienced degradation, a site-specific AMP accounting for the extent of the degradation experienced should be implemented to manage the concrete aging during the requested period of extended operation.	Further evaluation to determine whether a site-specific AMP is needed
V.1.C-3	Concrete: Basemat (pad) and approach slab (ramp) (below-grade) (B)	SS	Reinforced concrete	Groundwater/ soil	Cracking due to expansion from reaction with aggregates	Further evaluation is required to determine if a site-specific AMP is needed to manage cracking and expansion due to reaction with aggregate of concrete in inaccessible areas. A site-specific AMP is not required if (1) as described in NUREG-1557, investigations, tests, and petrographic examinations of aggregates per ASTM C295 and other ASTM reactivity tests, as required, can demonstrate that those aggregates do not adversely react within concrete, or (2) for potentially reactive aggregates, aggregate concrete reaction is not significant if it is demonstrated that the in-place concrete can perform its intended function.	Further evaluation to determine whether a site-specific AMP is needed

Table V.1.C NUHOMS Dry Spent-Fuel Storage: Basemat (Pad) and Approach Slab (Ramp)

Item	Structure and/or Component[1]	Intended Function[2]	Material	Environment	Aging Effect/ Mechanism	Aging Management Program (AMP)	Program Type
V.1.C-4	Concrete: Basemat (pad) and approach slab (ramp) (below-grade) (B)	SS	Reinforced concrete	Groundwater/ soil	Loss of material (spalling, scaling) and cracking due to freeze-thaw	Further evaluation is required for facilities that are located in moderate to severe weathering conditions (weathering index >100 day-inch/yr) (NUREG-1557) to determine if a site-specific AMP is needed. A site-specific AMP is not required if documented evidence confirms that the existing concrete had air entrainment content (as per Table CC-2231-2 of the ASME Code, Section III Division 2), and subsequent inspections of accessible areas did not exhibit degradation related to freeze-thaw. Such inspections should be considered a part of the evaluation. If this condition is not satisfied, then a site-specific AMP is required to manage loss of material (spalling, scaling) and cracking due to freeze-thaw of concrete in inaccessible areas. The weathering index for the continental United States is shown in ASTM C33-90, Fig. 1.	Further evaluation to determine whether a site-specific AMP is needed
V.1.C-5	Concrete (inaccessible areas): Basemat (pad) and approach slab (ramp) (B)	SS	Reinforced concrete	Groundwater/ soil	Increase in porosity and permeability; cracking; loss of material (spalling, scaling) due to aggressive chemical attack	For facilities with non-aggressive groundwater/soil; i.e., pH >5.5, chlorides <500 ppm, or sulfates <1500 ppm, as a minimum, consider (1) examination of the exposed portions of the below-grade concrete, when excavated for any reason, and (2) periodic monitoring of below-grade water chemistry, including consideration of potential seasonal variations. For facilities with aggressive groundwater/soil (i.e., pH <5.5, chlorides >500 ppm, or sulfates >1500 ppm), and/or where the concrete structural elements have experienced degradation, a site-specific AMP accounting for the extent of the degradation experienced should be implemented to manage the concrete aging during the requested period of extended operation.	Further evaluation to determine whether a site-specific AMP is needed

Table V.1.C NUHOMS Dry Spent-Fuel Storage: Basemat (Pad) and Approach Slab (Ramp)

Item	Structure and/or Component[1]	Intended Function[2]	Material	Environment	Aging Effect/ Mechanism	Aging Management Program (AMP)	Program Type
V.1.C-6	Concrete (inaccessible areas): Exterior below-grade; basemat (concrete pad) and approach slab (ramp) (B)	SS	Reinforced concrete	Groundwater/ soil	Increase in porosity and permeability; loss of strength due to leaching of calcium hydroxide and carbonation	Further evaluation is required to determine if a site-specific AMP is needed to manage increase in porosity and permeability due to leaching of calcium hydroxide and carbonation of concrete in inaccessible areas. A site-specific AMP is not required if (1) there is evidence in the accessible areas that the flowing water has not caused leaching and carbonation, or (2) evaluation determined that the observed leaching of calcium hydroxide and carbonation in accessible areas has no impact on the intended function of the concrete structure.	Further evaluation to determine whether a site-specific AMP is needed
V.1.C-7	Concrete: Basemat (pad) and approach slab (ramp) (B)	SS	Reinforced concrete	Air – outdoor; Groundwater/ soil	Reduction of strength, cracking due to differential settlement, and erosion of porous concrete sub-foundation	Further evaluation is required to determine if a site-specific AMP is needed, if a de-watering or any other system is relied upon for control of settlement, to ensure proper functioning of that system through the requested period of extended operation.	Further evaluation to determine whether a site-specific AMP is needed

1. The structures and/or components are classified according to importance to safety, as follows: A = critical to safety operation, B = major impact on safety, and C = minor impact on safety.
2. The important to safety (ITS) functions of the structures and components are as follows: CB = confinement boundary, CC = criticality control, RS = radiation shielding, HT = heat transfer, SS = structural support, and FR = fuel retrievability.

Page intentionally blank

V.2 HI-STORM 100 and HI-STAR 100 Systems

V.2.1 Overall System Description

Holtec International has developed dry cask storage system (DCSS) designs, the HI-STORM (acronym for Holtec International – Storage and Transfer Operation Reinforced Module) 100 system and HI-STAR (Holtec International – Storage, Transport, And Repository) 100 system. The HI-STORM 100 system consists of a metallic multipurpose canister (MPC) that contains the used fuel assemblies, a HI-STORM concrete storage overpack that contains the MPC during storage. Additionally they utilize a HI-TRAC transfer cask that contains the MPC during loading, unloading and transfer operations. The HI-STAR 100 system consists of an MPC and the HI-STAR 100 metal overpack, which is used to load, unload, transfer, and store the used fuel assemblies contained in the MPC. The HI-STORM 100 system is certified only for storage, while the HI-STAR 100 system (including overpack) is certified for both storage and transportation.

The MPC design in both the HI-STORM 100 and HI-STAR 100 storage systems has the following six functions:

1. Provide confinement;
2. Dissipate heat;
3. Withstand large impact loads;
4. Provide unrestrained free-end expansion;
5. Maintain geometric spacing to avoid criticality; and
6. Avoid significant impairment of retrievability of stored used fuel.

The storage overpack designs in Holtec systems have the following functions:

1. Provide a missile barrier and radiological shielding;
2. Provide cooling for the MPC through natural convection for HI-STORM and conduction for HI-STAR;
3. Provide kinematic stability to the MPC, which is a free-standing component; and
4. Act as an energy absorber for the MPC in the event of a tip-over accident.

The HI-STORM cask is presently used in the United States in combination with the MPC-24, MPC-32, and MPC-68 canisters, while the HI-STAR cask is used with the MPC-68 canister. In addition, a variant design of the HI-STAR overpack, designated HI-STAR HB, is being used in conjunction with the MPC-HB canister under a site-specific license at the Humboldt Bay ISFSI. The components of the two storage systems are described here.

The basic HI-STORM 100 system consists of interchangeable MPCs providing a confinement boundary for boiling water reactor (BWR) or pressurized water reactor (PWR) used nuclear fuel, a storage overpack providing a structural and radiological boundary for the MPC placed inside it, and a transfer cask for transfer of a loaded MPC from a used-fuel storage pool to the storage overpack. All MPC designs have a nominal external diameter of 1.74 m (68.375 in.) and the maximum overall

length is 4.84 m (190.5 in.). The maximum weight of fully loaded MPCs, however varies because of the differing storage contents; the maximum weight is approximately 44.5 tons. The MPCs are designed for maximum and minimum temperatures of 385°C (725°F) and -40°C (-40°F); internal pressures of 689.5, 758.4, and 1,379.0 kPa (100, 110, and 200 psi) under normal, off-normal, and accident conditions, respectively; and maximum permissible peak fuel cladding temperatures of 400°C (752°F) for short- and long-term normal operations and 570°C (1058°F) for off-normal and accident conditions and during MPC drying.

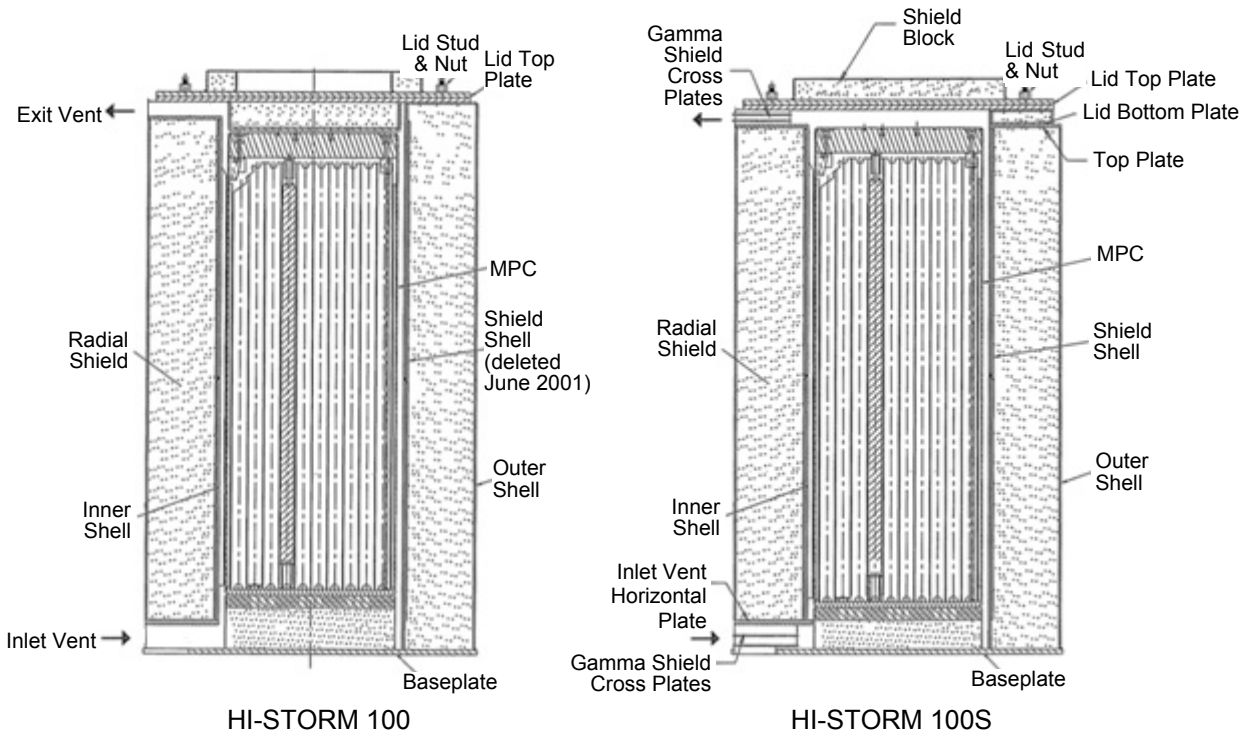

Figure V.2-1: Cross-sectional views of an MPC inserted into HI-STORM 100 and 100S storage overpacks (HI-2002444, Rev. 8, 2010).

A base HI-STORM overpack design is capable of storing each type of MPC. The overpack inner cavity can accommodate canisters with an inner-shell diameter of 1.87 m (73.5 in.) and a cavity height of 4.86 m (191.5 in.). The overpack inner shell is provided with channels distributed around the inner cavity to present an available inside diameter of 1.77 m (69.5 in.). The channels provide guidance for MPC insertion and removal, and a flexible medium to absorb some of the impact during a tip-over. They also allow flow of cooling air through the overpack. Some designs of the HI-STORM overpack (e.g., at Diablo Canyon) do not have channels on the inner surface. The outer diameter of the overpack is 3.37 m (132.5 in.), and the overall height is 6.08 m (239.5 in.). The design life of the HI-STORM 100 System is 40 years. There are three base HI-STORM overpack designs: HI-STORM 100, HI-STORM 100S, and HI-STORM 100S Version B. The significant differences among the three are overpack height, MPC pedestal height, location of the air outlet ducts, and the vertical alignment of the inlet and outlet air ducts. The HI-STORM 100S Version B overpack design does not include a concrete-filled pedestal to support the MPC. Instead, the MPC rests upon a steel plate that maintains the MPC sufficiently above the inlet air ducts to prevent direct radiation shine through the ducts. Cross-sectional views of the storage system with an MPC inserted into HI-STORM 100 and HI-STORM 100S overpacks, respectively, are presented in Fig. V.2-1. Similar information for the HI-STORM 100S Version B overpack is provided in Fig. V.2-2. The HI-STORM 100S system is either

5.89 or 6.17 m (232 or 243 in.) high, and the HI-STORM 100S Version B system is 5.54 or 5.82 m (218 or 229 in.) high.

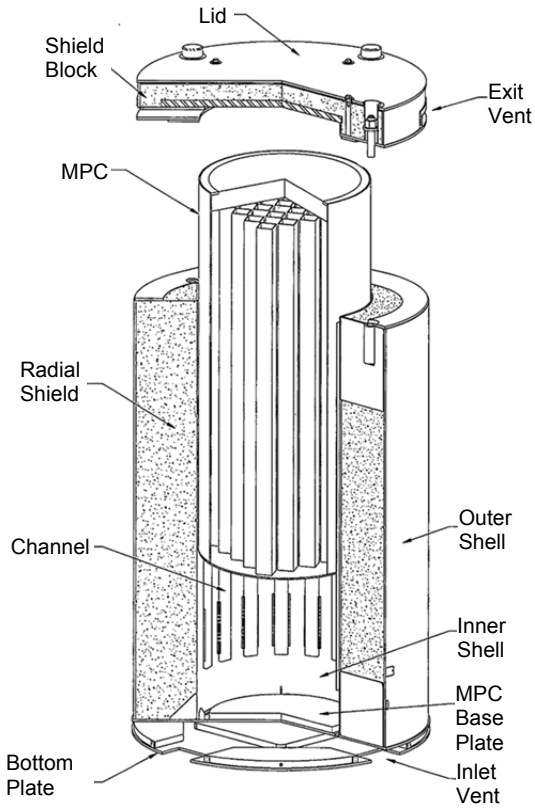

Figure V.2-2: HI-STORM 100 System using a HI-STORM 100S Version B overpack. (HI-2002444, Rev. 8, 2010)

Alternative versions of the HI-STORM 100A and 100SA overpacks, which are equipped with lugs to anchor the overpack to the ISFSI pad, are generally deployed at those sites where the postulated seismic events exceed the maximum limit permitted for free-standing installation. The anchored version of the HI-STORM system differs only in the diameter of the overpack baseplate and the presence of holes and associated anchorage hardware. The HI-STORM 100S version B overpack design is not deployed in the anchored configuration at this time.

V.2.1.1 Multipurpose Canisters

The MPCs are welded cylindrical structures, shown in cross-sectional views in Figs. V.2-3 (a), (b), and (c). The outer diameter of each MPC is fixed, so that any of them will fit into either the HI-STORM or HI-STAR overpacks described below. It should be noted, however, that only certain MPC and overpack combinations are currently licensed for use. Each used-fuel MPC is an assembly consisting of a honeycombed fuel basket, a baseplate, a canister shell, a lid, and a closure ring. A cross-sectional elevation view of a fuel basket for the MPC-68 series is shown in Fig. V.2-4. The number of used-fuel storage locations in each of the MPCs depends on the fuel assembly characteristics. Ten MPC models, distinguished by the type and number of fuel assemblies authorized for loading, are presently certified by the NRC for use in the United States. These are the MPC-24 series (including the MPC-24E and MPC-24EF), the MPC-32 series (including the MPC-32F),

and the MPC-68 series (including the MPC-68F, MPC-68FF, and MPC-HB). The numerical suffix for each canister series denotes the maximum number of fuel elements that it can accommodate and the letter "F" indicates that the canister is designed for the storage of damaged fuel.

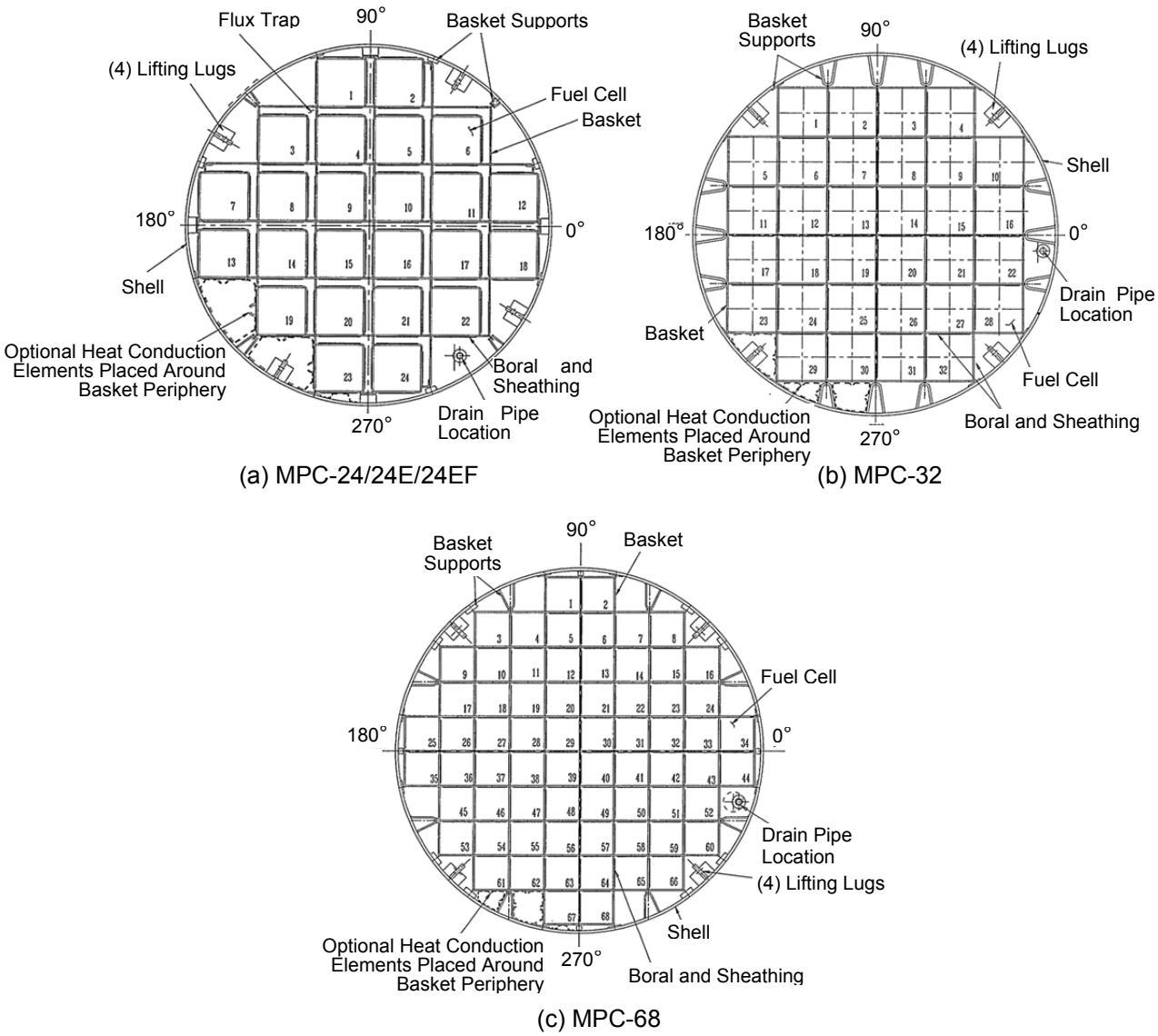

Figure V.2-3: Cross-sectional views of different MPC designs (HI-2002444, Rev. 8, 2010).

In addition, the following variant designs exist:

(a) The MPC-24E and MPC-24EF canisters are variants of the MPC-24 configuration that are designed for the storage of spent fuel from the Trojan reactor in conjunction with a TranStor cask. Here, the letter "E" indicates that the canister is an enhanced design. The MPC-24E canister is designed to transport up to 24 intact PWR and up to four damaged PWR fuel assemblies in damaged fuel containers. The MPC-24EF canister is designed to transport up to 24 intact PWR fuel assemblies and up to four damaged PWR fuel assemblies or fuel assemblies classified as fuel debris.

(b) The MPC-68FF canister combines the thickened top portion of the MPC-68F shell with a maximized B-10 loading in the Boral neutron absorbers of the standard MPC-68 to allow storage of a wide range of damaged BWR fuel and fuel debris. This change involves only criticality control. The MPC-68FF is not authorized for use in transportation under HI-STAR 10 CFR 71 CoC 71-9261.

(c) The MPC-HB canister is a variant of the MPC-64 design that is used to store spent fuel from the Humboldt Bay reactor. These fuel assemblies are shorter in length and significantly lower in heat load than those from most other reactors. Consequently, the MPC-HB canister is shorter than the standard MPC-68 configuration and the internal basket has been modified to accommodate 80 fuel assemblies. For this reason, it is sometimes also identified as the MPC-80 design.

Effective with the most recent amendments to the HI-STORM and HI-STAR CoCs, all of the canister designs with the exception of the MPC-24 have been approved for use with damaged fuel. The basic parameters for the various Holtec MPC canisters are summarized in Table V.2-1.

Table V.2-1 Basic Parameters of the Holtec International Multipurpose Canisters or HI-STORM 100 and HISTAR 100.

Parameter	MPC-24, 24E, 24EF	MPC-32, 32F	MPC-68, 68F, 68FF	MPC-HB [a]
Fuel Type	PWR	PWR	BWR	BWR
No. of Assemblies (intact/damaged)	24/4	32/12	68/16	80/40
Max. Initial Enrichment (%U-235) [b]	5	5	4.2	2.6
Maximum Heat Load (kW) [a]	36.9	36.9	36.9	2.0
Minimum Cooling Time (years) [b]	3	3	3	25
Maximum Fuel Burnup (GWd/MTU) [b]	68.2	68.2	65	20
Dimensions				
Height [m (in.)]	4.839 (190.5)	4.839 (190.5)	4.839 (190.5)	2.90 (114)
Outer Diameter [m (in.)]	1.74 (68.4)	1.74 (68.4)	1.74 (68.4)	1.74 (68.4)
Inner Diameter [m (in.)]	1.71 (67.4)	1.71 (67.4)	1.71 (67.4)	1.71 (67.4)
Cavity Height [m (in.)]	4.534 (178.5)	4.534 (178.5)	4.534 (178.5)	4.534 (178.5)
Total Wall Thickness [mm (in.)]	12.7 (0.5)	12.7 (0.5)	12.7 (0.5)	12.7 (0.5)
Base Thickness [mm (in.)]	63.5 (2.5)	63.5 (2.5)	63.5 (2.5)	63.5 (2.5)
Structural Lid Thickness [mm (in.)]	241 (9.5)	241 (9.5)	241 (9.5)	241 (9.5)
Max. Weight [tonne (tons)]	40.8 (45)	40.8 (45)	40.8 (45)	26.8 (29.5)
Overpacks Currently in Use	HI-STORM HI-STAR	HI-STORM	HI-STORM HI-STAR	HI-STAR, Version HB
NRC Part 72 Docket	72-1008 (for HI-STAR) 72-1014 (for HI-STORM)	72-1014	72-1008 72-1014	72-27 [c]

[a] For HI-STAR 100/HI-STAR HB only.

[b] The allowable initial enrichment, burnup, and cooling time are interdependent and vary between fuel types. When used with the HI-STAR overpack, the canister head load is limited to 19 kW for PWR fuel and 18.5 kW for BWR fuel, and the minimum cooling time is 5 years.

[c] Site-specific license for use at the Humboldt Bay ISFSI.

The fuel storage cells in the MPC-24 series are physically separated from one another by a "flux trap," for criticality control. Flux traps are not used in the MPC-32 and MPC-68 series. Instead, the MPC-32 design includes credit for soluble boron in the MPC water during wet fuel loading and unloading operations for criticality control. The MPC fuel baskets that do not use flux traps (namely, MPC-68, MPC-68F, MPC-68FF, MPC-32, and MPC-32F) are constructed from an array of plates welded to each other at their intersections. In the flux-trap-type fuel baskets (MPC-24, MPC-24E, and MPC-24EF), angle sections are interposed onto the orthogonally configured plate assemblage to create the required flux-trap channels. The MPC fuel basket is positioned and supported within the MPC shell by a set of basket supports welded to the inside of the MPC shell. In the early-vintage MPCs fabricated, certified, and loaded under the original HI-STORM 100 design, optional heat conduction elements (fabricated from thin aluminum Alloy 1100) may have been installed between the periphery of the basket, the MPC shell, and the basket supports. The heat-conduction elements are installed along the full length of the MPC basket except at the drainpipe location to create a nonstructural thermal connection that facilitates heat transfer from basket to shell. The aluminum heat conduction elements are not installed in later versions of the HI-STORM 100.

For fuel assemblies that are shorter than the design basis length, upper and lower fuel spacers, as appropriate, maintain the axial position of the fuel assembly within the MPC basket. The upper fuel spacers are threaded into the underside of the MPC lid as shown in Fig. V.2-4. The lower fuel spacers are placed in the bottom of each fuel basket cell. The upper and lower fuel spacers are designed to withstand normal, off-normal, and accident conditions of storage. An axial clearance of approximately 50.8–63.5 mm (2.0–2.5 in.) is provided to account for the irradiation and thermal growth of the fuel assemblies. The actual length of fuel spacers is determined on a site-specific or fuel-assembly-specific basis (Holtec, 2013).

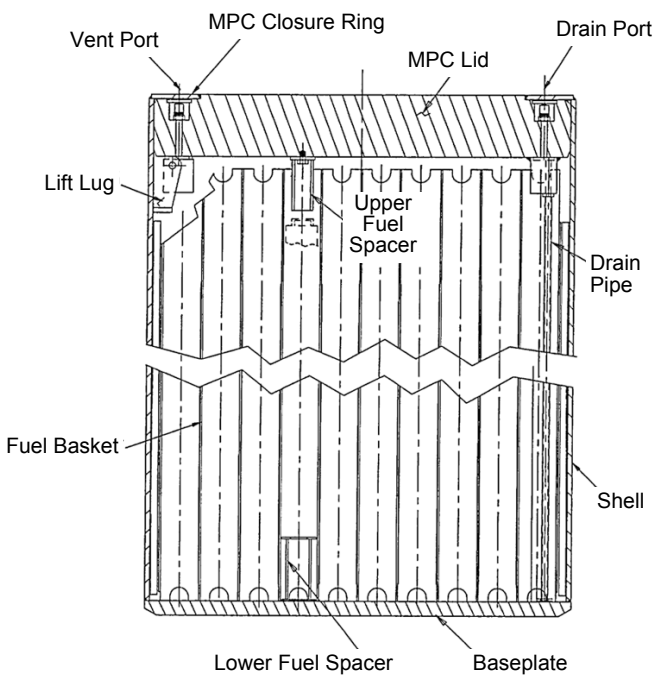

Figure V.2-4: Cross-section elevation view of MPC (HI-2002444, Rev. 8, 2010).

All structural components in MPCs are made of a material designated by the manufacturer as "Alloy X." Candidate Alloy X materials include Types 304, 304L, 316, and 316LN austenitic stainless steels. Any steel component in an MPC may be fabricated from any Alloy X material; however, the various

sections of the 12.7-mm (0.5-in.)-thick cylindrical MPC shell must all be fabricated from the same type of Alloy X stainless steel. All MPC components that are likely to come in contact with used-fuel pool water or the ambient environment (with the exception of neutron absorber, aluminum seals on vent and drain port caps, and optional aluminum heat conduction elements) are constructed from stainless steel. Thus, there are no concerns regarding potential interactions between coated carbon steel materials and the various MPC operating environments.

Lifting lugs attached to the inside surface of the MPC canister shell (Fig. V.2-4) serve to permit placement of the empty MPC into the HI-TRAC transfer cask and also serve to axially locate the MPC lid prior to welding. They are not used to handle a loaded MPC because the MPC lid is installed prior to any handling of a loaded canister. The MPC lid is a circular plate (fabricated from one piece or two pieces—split top and bottom) edge-welded to the MPC outer shell. In the two-piece lid design, only the top piece comprises a part of the enclosure vessel's pressure boundary; the bottom piece is attached to the top piece with a non-structural, non-pressure-retaining weld and acts as a radiation shield. The lid is equipped with vent and drain ports that are utilized to remove moisture and air from the MPC and backfill the MPC with helium. The vent and drain ports are covered and seal welded before the closure ring is installed (Fig. V.2-5). The closure ring is a circular ring edge-welded to the MPC shell and lid; details are shown in Fig. V.2-6. The MPC lid provides sufficient rigidity to allow the entire MPC, loaded with used fuel, to be lifted by the threaded holes in the MPC lid.

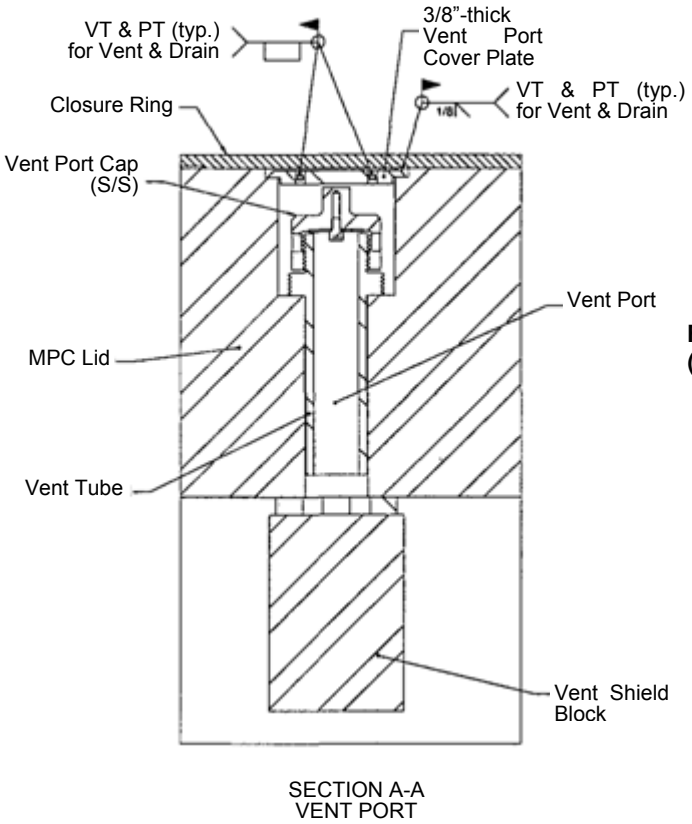

Figure V.2-5: MPC vent port details (HI-2002444, Rev. 8, 2010).

The MPC does not require any valves, gaskets or mechanical seals for confinement. Figure V.2-7 shows the MPC confinement boundary. All components of the confinement boundary are safety significant, and are fabricated entirely of stainless steel. The MPC confinement boundary components are designed and fabricated in accordance with the ASME Code Section III, Subsection

NB. The primary confinement boundary is defined by the outline formed by the sealed, cylindrical enclosure of the MPC shell (including any associated axial or circumferential welds) welded to the baseplate at the bottom, the MPC lid welded around the top circumference to the shell wall, and the port cover plates welded to the lid. As required by 10 CFR 72.236(e), the MPC incorporates a redundant closure system consisting of the closure ring welded to the lid and the MPC shell, as shown in Fig. V.2-4. All welds associated with the MPC confinement boundary are shown in Fig. V.2-8. The welds between MPC lid and vent or drain port cover plate are helium leak tested. The weld between lid and MPC shell is not required to be helium leak tested because (a) it is a multipass (more than a 2-pass) weld, (b) root pass, cover pass and at least one in-between pass are inspected by either ultrasonic testing (UT) or liquid penetrant testing (PT), and (c) the minimum detectable flaw size is demonstrated to be less than the critical flaw size as calculated in accordance with ASME Section XI methodology. The weld is then covered by a closure ring to form a redundant enclosure.

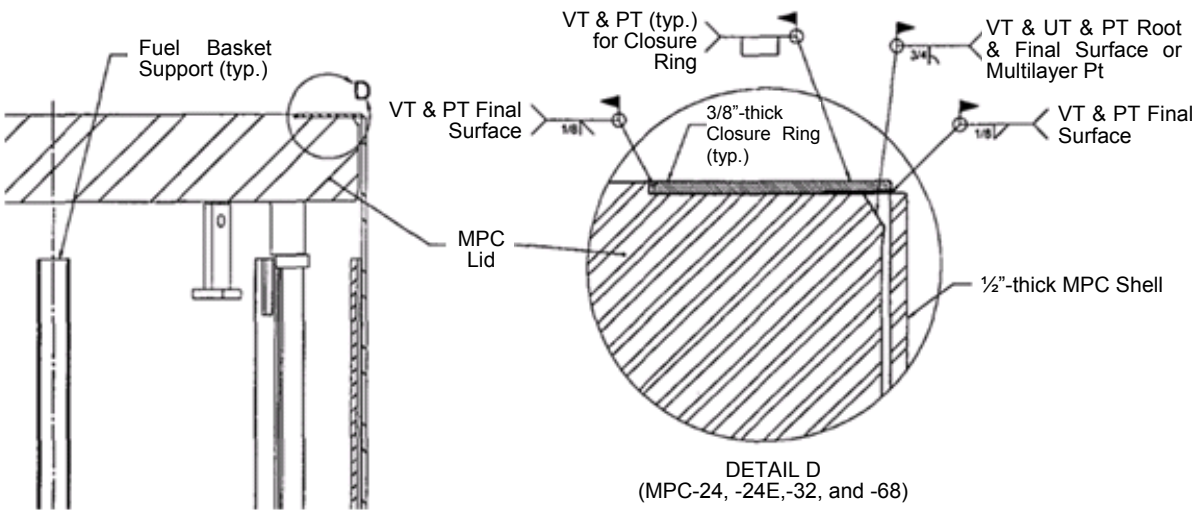

Figure V.2-6: MPC closure details showing the MPC shell, MPC lid, and closure ring (HI-2002444, Rev. 8, 2010).

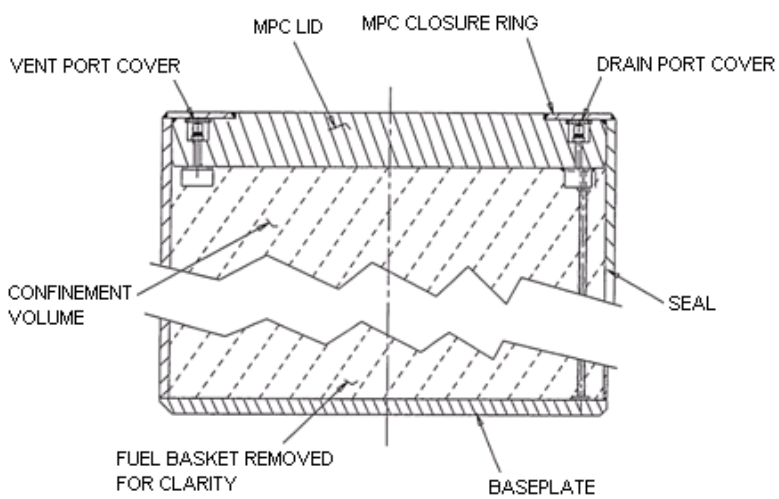

Figure V.2-7: MPC confinement boundary (HI-2002444, Rev. 8, 2010).

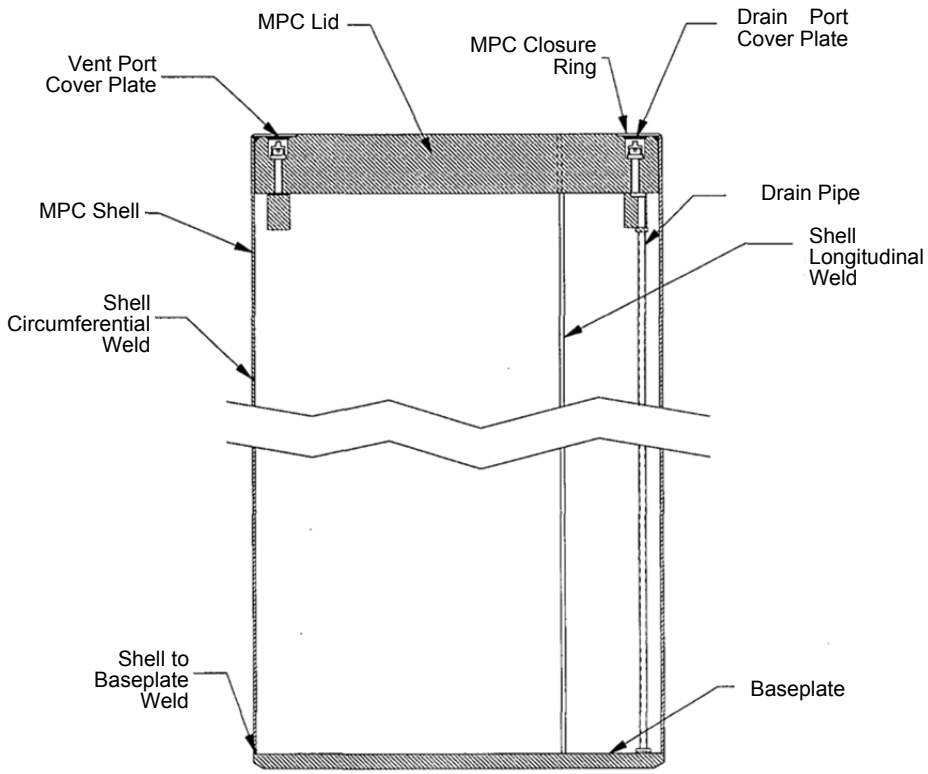

Figure V.2-8: Weld associated with the MPC confinement boundary (HI-2002444, Rev. 8, 2010).

The helium backfill gas plays an important role in the MPC thermal performance. It fills all the spaces between solid components and provides an improved conduction medium relative to air for dissipating decay heat in the MPC. Furthermore, the pressurized helium environment within the MPC sustains a closed-loop thermo-siphon action, removing used-fuel decay heat by upward flow of helium through the storage cells. This internal-convection heat dissipation process is illustrated in Fig. V.2-9.

V.2.1.2 HI-STORM 100 Overpacks

The HI-STORM overpacks are rugged, heavy-walled cylindrical vessels. The HI-STORM 100A and 100SA overpack designs are the anchored variant of the HI-STORM 100 and -100S designs. The HI-STORM 100A and 100SA systems differ only in the diameter of the overpack baseplate and the presence of bolting holes and associated anchorage hardware. The main structural function of the storage overpack is provided by carbon steel, and the main shielding function is provided by plain concrete. The plain concrete, enclosed by cylindrical inner and outer steel shells, a thick baseplate, and a top plate, is specified to provide the necessary shielding properties (dry density) and compressive strength. The overpack lid has appropriate concrete shielding to provide neutron and gamma attenuation in the vertical direction.

The vertical annulus between the MPC and the inner shell of the overpack facilitates an upward flow of air by buoyancy forces, drawing ambient air from the inlet vents and releasing it from the outlet vents at the top of the HI-STORM storage system. The annulus ventilation flow cools the hot MPC

surfaces and safely transfers decay heat to the outside environment. This overpack cooling process is illustrated in Fig. V.2-10.

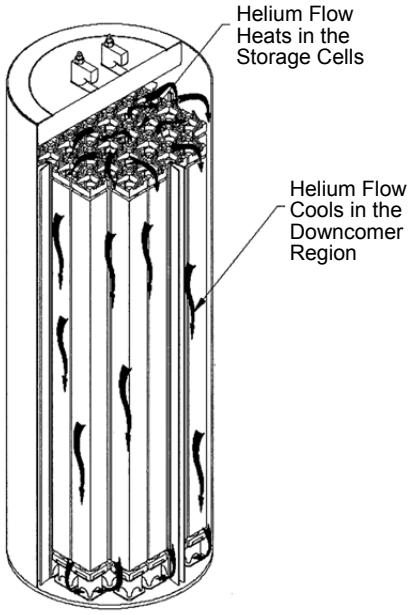

Figure V.2-9: MPC internal helium circulation (HI-2002444, Rev. 8, 2010).

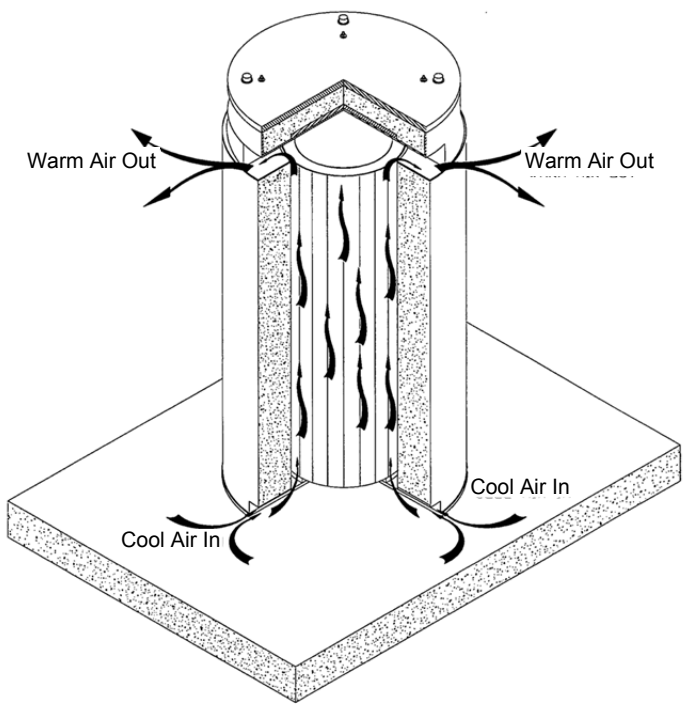

Figure V.2-10: Ventilation cooling of a HI-STORM storage system (HI-2002444, Rev. 8, 2010).

The principal function of the concrete is to provide shielding against gamma and neutron radiation. However, it also imparts a large thermal inertia to the HI-STORM overpack, allowing it to moderate the rise in temperature of the system under hypothetical conditions when all ventilation passages are assumed to be blocked. The high thermal inertia characteristics of the HI-STORM concrete also

control the temperature of the MPC in the event of a postulated fire accident at the ISFSI. Although the annular concrete mass in the overpack shell is not a structural member, it does act as an elastic/plastic filler of the intershell space.

The HI-STORM overpack has air ducts to allow for passive natural convection cooling of the contained MPC. A minimum of four air inlets and four air outlets are located at the lower and upper extremities of the storage system, respectively. The locations of the air outlets in the HI-STORM 100 and the HI-STORM 100S (including Version B) designs differ in that the outlet ducts for the HI-STORM 100 overpack are located in the overpack body and are aligned vertically with the inlet ducts at the bottom of the overpack body. The air outlet ducts in the HI-STORM 100S and 100S Version B are integral to the lid assembly and are not in vertical alignment with the inlet ducts. A screen to reduce the potential for blockage covers the air inlets and outlets.

Four threaded anchor blocks, located at 90° intervals around the circumference of the top of the overpack lid, are provided for lifting. The anchor blocks are integrally welded to the radial plates, which in turn are full-length welded to the overpack inner shell, outer shell, and baseplate (HI-STORM 100) or the inlet air duct horizontal plates (HI-STORM 100S). The HI-STORM 100S Version B overpack design incorporates partial-length radial plates at the top of the overpack to secure the anchor blocks and uses both gussets and partial-length radial plates at the bottom of the overpack for structural stability. The overpack may also be lifted from the bottom using specially designed lifting transport devices, including hydraulic jacks, air pads, Hillman rollers, or other designs based on site-specific needs and capabilities.

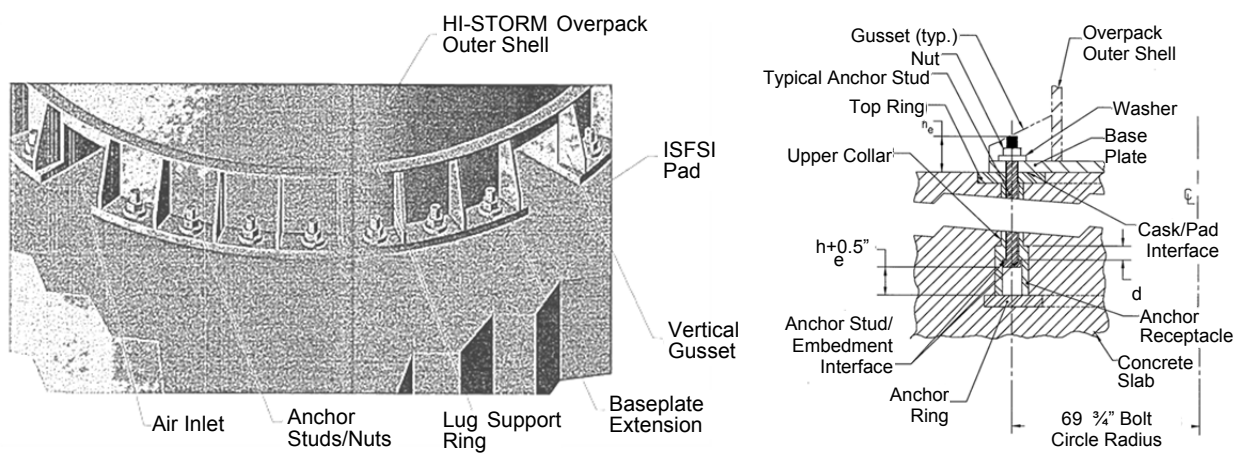

Figure V.2-11: Anchoring details for the HI-STORM 100A and 100SA overpacks (HI-2002444, Rev. 8, 2010).

As discussed earlier, the HI-STORM overpack is a steel weldment, which makes it a relatively simple matter to extend the overpack baseplate, form lugs (or "sector lugs"), and then anchor the cask to the reinforced concrete structure of the ISFSI. The sector lugs are bolted to the ISFSI pad using anchor studs that are made of a creep-resistant, high-ductility, environmentally compatible material. The typical HI-STORM/ISFSI pad fastening detail is shown in Fig. V.2-11. The lateral load-bearing capacity of the HI-STORM/pad interface is many times greater than the horizontal sliding force exerted on the cask under the postulated design basis earthquake seismic event. Thus, the potential for lateral sliding of the HI-STORM 100A system during a seismic event is precluded, as is the potential for any bending action on the anchor studs. The sector lugs in the HI-STORM 100A are typically made of the same steel material as the baseplate and the shell (SA516-Gr. 70), to help

ensure the high quality of the fillet welds used to join the lugs to the body of the overpack. The basic parameters of the HI-STORM 100 overpack are summarized in Table V.2-2.

Table V.2-2 Basic Parameters of the HI-STORM 100 and HI-STAR 100 Storage Casks

Parameter	HI-STORM 100		HI-STAR 100	
Fuel Type	PWR	BWR	PWR	BWR
No. of Assemblies	24/32	68	24	68
Maximum Heat Load (kilowatts)	27/36.9	36.9	19	18.5
Minimum Cooling Time (years)	3	3	5	5
Maximum Fuel Burnup (GWd/MTU)	68.2	65	42.1	37.6
Dimensions				
Height [m (in.)]	6.08 (239.5)[a]		5.159 (203.1)[b]	
Outer Diameter [m (in.)]	3.37 (132.5)		2.44 (96)	
Inner Diameter [m (in.)]	1.77 (69.5)		1.75 (68.8)	
Cavity Height [m (in.)]	4.864 (191.5)		4.854 (191.1)[b]	
Inner Shell Thickness [mm (in.)]	-		63.5 (2.5)	
Gamma Shield Thickness [mm (in.)]	-		152 (6.0)	
Neutron Shield Thickness [mm (in.)]	-		112 (4.4)	
Total Wall Thickness [mm (in.)]	800 (31.5)		345 (13.6)	
Base Thickness [mm (in.)]	432-559 (17-22)		152 (6.0)	
Structural Lid Thickness [mm (in.)]	318 (12.5)[c]		152 (6.0)	
Overpack Weight [tonne (tons)]	122- 145 (135-160)		70 (77)	
Canisters Currently in Use	MPC-24 (PWR) MPC-32 (PWR) MPC-68 (BWR)		MPC-68 (BWR) MPC-HB (BWR)[d]	
NRC Part 72 Docket	72-1014		72-1008 72-27[d] (71-9261[e])	

[a] The HI-STORM 100S cask is either 5.89 or 6.17 m (232 or 243 in.) high, and the HI-STORM 100S Version B cask is either 5.53 or 5.82 m (218 or 229 in.) high, depending upon the specific subtype.
[b] For the HI-STAR HB (Humboldt Bay) overpack, the outer height is 3.25 m (128 in.) and the cavity height is 2.92 m (115 in.).
[c] The lid thicknesses for the 100S designs range from 483 to 533 mm (19 to 21 in.), depending upon the specific subtype.
[d] Variant Hi-STAR HB overpack design used in conjunction with the MPC-HB canister under a site-specific license at Humboldt Bay ISFSI.
[e] Licensed for transport under CoC 71-9261.

V.2.1.3 HI-STAR 100 Overpack

The HI-STAR 100 overpack is a heavy-walled carbon and low-alloy steel cylindrical vessel formed by an inner shell welded at the bottom to a cylindrical main flange with bolted closure plate. The HI-STAR 100 overpack with the MPC partially inserted is shown in Fig. V.2-12. The overpack consists of one inner shell, five intermediate shells and one enclosure shell that form the body of the overpack. Figure V. 2-13 provides an elevation view of the overpack. Figure V. 2-14 provides a cross section view of the overpack, depicting the inner shell, five intermediate shells, outer enclosure shell, and neutron shield. The overpack is completely sealed. The overpack containment boundary is formed by a steel inner shell, welded at the bottom to a bottom plate and at the top to a heavy top flange with a bolted overpack closure plate.

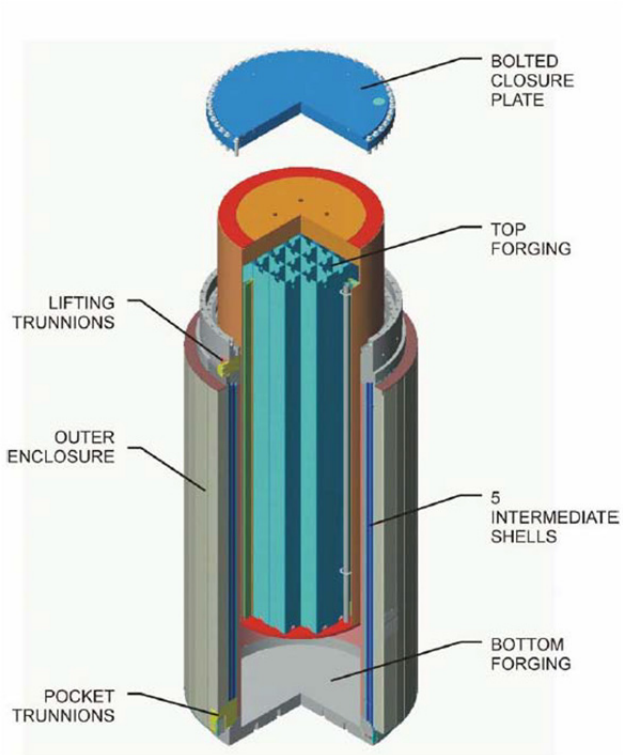

Figure V.2-12: HI-STAR 100 overpack with MPC partially inserted (Note: as indicated by annotation in figure, intermediate shell consists of 5 different shells.) (EPRI 1021048, 2010).

Two concentric grooves are machined into the closure plate for the metallic seals. The bolted closure plate is recessed into the top flange and the bolted joint is configured to provide maximum protection to the closure bolts and seals in the event of a drop accident. The closure plate has test and vent ports, which are sealed by a threaded port plug with a metallic seal as shown in Fig. V.2-13. The bottom plate has a drain port that is sealed by a threaded port plug with a metallic seal. The inner surfaces of the HI-STAR overpack form an internal cylindrical cavity for housing the MPC.

The outer surface of the overpack inner shell is buttressed with the five layers of intermediate shells of gamma shielding in the form of layers of carbon steel plate installed so as to ensure a permanent state of contact between adjacent layers, as shown in Figs. V.2-13 and V.2-14. Besides serving as an effective gamma shield, these intermediate layers also provide additional strength to the overpack to resist potential punctures or penetrations from external missiles. The radial channels are vertically welded to the outside surface of the outermost intermediate shell at equal intervals around the circumference (see Fig. V.2-14). The radial channels also act as fins for improved heat conduction to the overpack outer enclosure shell surface and as cavities for retaining and protecting the neutron shield (the HI-STAR HB does not utilize the radial channels due to the low heat load).

The outer enclosure shell is formed by welding enclosure shell panels between each pair of radial channels to form additional cavities. Neutron shielding material is placed into each of the radial cavity segments formed by the radial channels, the outermost intermediate shell, and the enclosure shell panels. The exterior flats of the radial channels and the enclosure shell panels form the overpack outer enclosure shell, as shown in Fig. V.2-14. At the top of the outer enclosure shell, rupture disks (i.e., pressure relief devices) are positioned in a recessed area. These rupture disks relieve internal pressure that may develop as a result of a fire accident and subsequent off-gassing of the neutron shield material. Within each radial channel, a layer of silicone sponge is positioned to

act as a thermal expansion foam to compress as the neutron shield expands. The exposed steel surfaces of the overpack are painted to prevent corrosion. Lifting trunnions are attached to the overpack top flange forging for lifting and for rotating the cask body between vertical and horizontal positions. The lifting trunnions are located 180° apart in the sides of the top flange. Pocket trunnions are welded to the lower side of the overpack to provide a pivoting axis for rotation. The pocket trunnions are located slightly off-center to ensure the proper rotation direction of the overpack (later versions of the HI-STAR design do not utilize pocket trunnions). The lifting trunnions do not protrude beyond the cylindrical envelope of the overpack enclosure shell. This feature reduces the potential for a direct impact on a trunnion in the event of an overpack side impact. The overpack is provided with aluminum honeycomb impact limiters, one at each end, to ensure that the impact loadings during the accident conditions are maintained below the design levels. The impact limiters are safety components for the overpack that are certified for both storage and transportation.

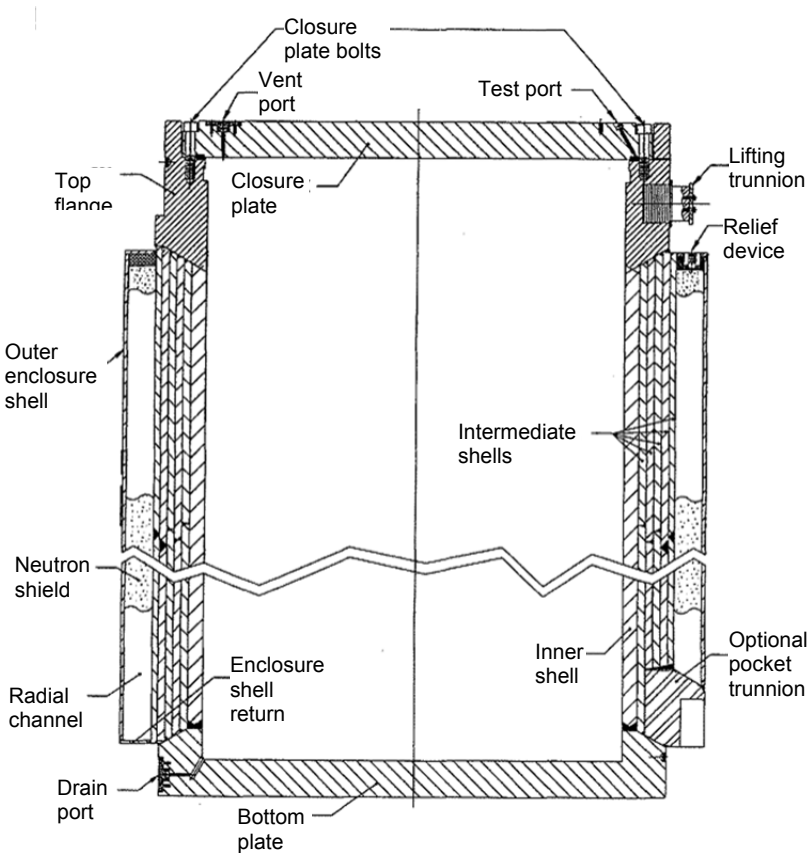

Figure V.2-13: HI-STAR 100 overpack elevation view (HI-2012610 Rev. 3, 2009).

A variation of the HI-STAR 100 overpack design, designated HI-STAR HB, has been developed to package the shorter, low-burnup-fuel Humboldt Bay fuel assemblies, and it is being used under a site-specific license at that ISFSI. The basic parameters of the HI-STAR 100 overpack are also summarized in Table V.2-2.

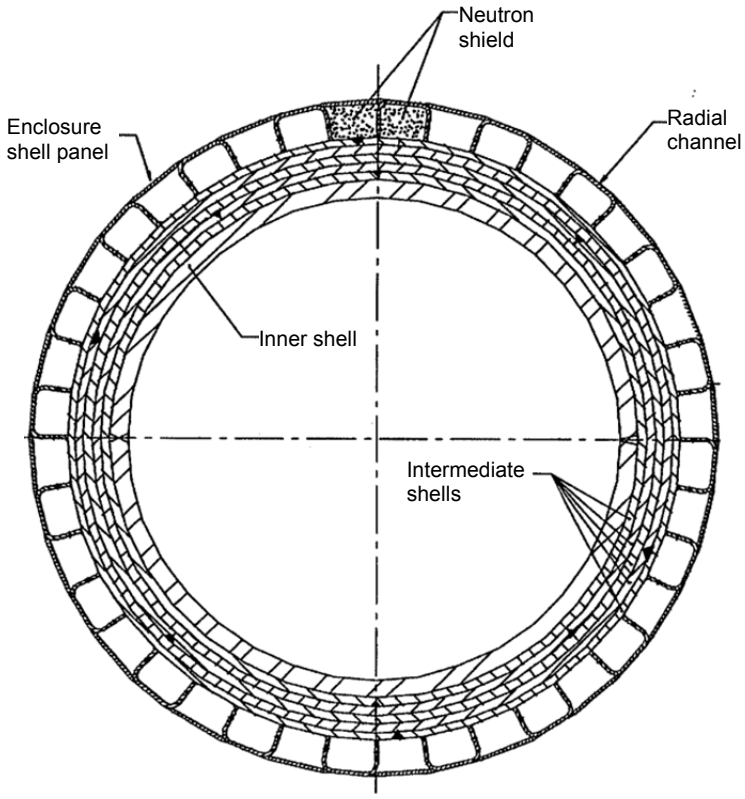

Figure V.2-14: HI-STAR 100 overpack cross-sectional view (HI-2012610 Rev. 3, 2009).

V.2.1.4 Shielding Materials

V.2.1.4.1 HI-STORM 100

The HI-STORM 100 System is provided with shielding to ensure that the radiation and exposure requirements in 1O CFR 72.104 and 1O CFR 72.106 are met. This shielding is an important factor in minimizing the personnel doses from the gamma and neutron sources in the used nuclear fuel in the MPC during loading, handling, transfer, and storage. The fuel basket structure of edge-welded composite boxes and neutron absorber panels attached to the fuel storage cell vertical surfaces provide the initial attenuation of gamma radiation emitted by the radioactive used fuel and criticality control, respectively. The MPC shell, baseplate, lid and closure ring provide additional thicknesses of steel to further reduce the gamma flux at the outer canister surfaces.

In the HI-STORM above-ground storage overpacks, the primary shielding in the radial direction is provided by concrete and steel. In addition, the HI-STORM 100 and 100S have a thick circular concrete pedestal upon which the MPC rests. This concrete pedestal is not necessary in the HI-STORM 100S Version B overpack design. The thick overpack lid and concrete shielding integral to the lid provide additional gamma attenuation in the upward direction, reducing both direct radiation and sky-shine. Several steel plate and shell elements provide additional gamma shielding as needed in specific areas, as well as incremental improvements in the overall shielding effectiveness. To reduce the radiation streaming through the overpack air inlets and outlets, gamma shield cross plates are installed in the ducts to scatter the radiation (Fig. V.2-15). The configuration of the gamma shield cross plates is such that the increase in the resistance to flow in the air inlets and outlets is minimized. This scattering acts to significantly reduce the local dose rates adjacent to the overpack air inlets and outlets.

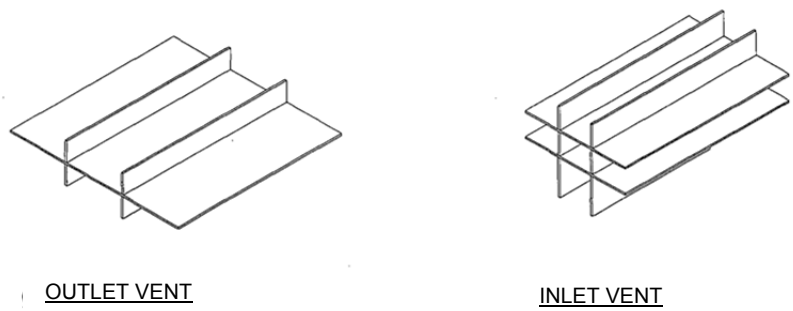

Figure V.2-15: Gamma shield cross plates for HI-STORM 100 and 100S overpacks (HI-2002444, Rev. 8, 2010).

Neutron absorbers: In nearly all MPC designs BORAL and METAMIC neutron absorber panels are used and are completely enclosed in Alloy X stainless steel sheathing that is stitch welded to the MPC basket cell walls along their entire periphery. The edges of the sheathing are bent toward the cell wall to make the edge weld. Thus, the neutron absorber is contained in a tight, welded pocket enclosure. The shear strength of the pocket weld joint, which is an order of magnitude greater than the weight of a fuel assembly, guarantees that the neutron absorber and its enveloping sheathing pocket will maintain their as-installed position under all loading, storage, and transport conditions. In addition, the pocket joint detail ensures that fuel assembly insertion or withdrawal into or out of the MPC basket will not lead to a disconnection of the sheathing from the cell wall.

Neutron shielding: Neutron attenuation in the HI-STORM overpack is provided by the thick walls of concrete contained in the steel shells, lid, and pedestal (only for the HI-STORM 100 and 100S overpack designs). The concrete composition has been specified to ensure its continued integrity at the long-term temperatures required for used-fuel storage.

Gamma shielding material: For gamma shielding, the HI-STORM 100 storage overpack relies primarily on the steel shells that contain the concrete structural material. A carbon steel plate, the shield shell, is located adjacent to the overpack inner shell to provide additional gamma shielding. Carbon steel supplements the concrete gamma shielding in most portions of the storage overpack, most notably the pedestal (HI-STORM 100 and 100S overpack designs only) and the lid.

It appears that there is a very limited concern about fatigue damage to HI-STORM 100 system structural components due to thermal loading, but it was not possible to find supporting analysis or numbers in the Final Safety Analysis Report (FSAR). The system design is such that there is no physical interference (either radial or axial) between fuel basket, MPC shell and overpack due to free thermal expansion. Thermal stresses in the MPC shell due to differential thermal expansion are small. The FSAR states that thermal gradient in the basket has been minimized, but no data for the corresponding stresses are given.

V.2.1.4.2 HI-STAR 100

The HI-STAR 100 and HI-STORM 100 storage systems share the same MPC designs, and their shielding characteristics have been described in the previous section. However, the primary HI-STAR 100 shielding is located in the overpack and consists of neutron shielding and additional layers of steel for gamma shielding, as shown in Figs. V.2-13 and V.2-14. Neutron shielding is provided around the outer circumferential surface of the overpack. Gamma shielding is provided by the overpack

inner, intermediate, and enclosure shells, with additional axial shielding provided by the bottom plate and the closure plate.

The neutron shielding material used in the HI-STAR 100 overpack is Holtite-A, a poured-in-place solid borated synthetic neutron-absorbing polymer. Holtite-A is specified with a nominal B_4C loading of 1 wt.% for the HI-STAR 100 System. The design and performance considerations involved in the selection of this material include its neutron attenuation characteristics, its durability under the anticipated service conditions, its stability under postulated accident conditions, and the ability to manufacture it with consistent and uniform properties. It has a density of 1.68 g/cm^3, a hydrogen concentration of 6 wt.%, and an upper design temperature of 149°C (300°F).

For gamma shielding, HI-STAR 100 utilizes carbon steel in plate stock form. Instead of utilizing a thick forging, the gamma shielding is made from successive layers of plate stock. The fabrication of the shell begins by rolling the inner shell plate and making the longitudinal weld seam. Each layer of the intermediate shells is constructed from two halves. The two halves of the shell are precision sheared, beveled, and rolled to the required radii. The two halves of the second layer are wrapped around the first shell. Each shell half is positioned in its location and, while pressure is applied using a specially engineered fixture, the halves are tack welded. The beveled edges to be joined are positioned to make contact or have a slight root gap. The second layer is made by joining the two halves using two longitudinal welds. Successive layers are assembled in a like manner. Thus, the welding of every successive shell provides a certain inter-layer contact. The longitudinal and circumferential welds of the intermediate shells are offset from the previous welds. This layered construction offers the following advantages over a thick forging:

- The number of layers can be increased as necessary to realize the required design objectives.
- The layered construction is ideal to stop propagation of flaws.
- The thinner plate stock is much more ductile than heavy forgings.
- Post-weld heat treatment is not required by the ASME Code, simplifying fabrication.

V.2.2 Design Codes and Service Life

The design life of the HI-STORM 100 System is 40 years. The design life considers the effects of environmental exposure, material degradation, corrosion, structural fatigue effects, helium atmosphere, cladding temperatures, and neutron-absorber boron depletion throughout the design life. Section III of the ASME Boiler and Pressure Vessel Code is the governing code for the structural design of the MPC and the steel structure of the overpack. The MPC confinement boundary is designed in accordance with Section III, Subsections NB Class 1. The MPC fuel basket and basket support are designed in accordance with Subsection NG Class 1. The overpack steel structure and anchor studs are designed in accordance with ASME code Section III, Subsection NF, Class 3.

ACI 349 is the governing code for the plain concrete in the overpack. ACI 318.1-89 is the code utilized to determine the allowable compressive strength of the plain concrete. If the Zero Period Accelerations at the surface of the concrete pad exceed the threshold limit for the freestanding HI-STORM, the cask must be installed in an anchored configuration (HI-STORM 100A). The embedment design for the HI-STORM 100A (and 100SA) should comply with Appendix B of ACI-349-97. A later Code edition may be used, provided a written reconciliation is performed.

The design life of the HI-STAR 100 System is also 40 years. The ASME Code, 1995 Edition with Addenda through 1997, is the governing Code for the HI-STAR 100 System. The HI-STAR 100 overpack inner shell, closure plate, top flange, bottom plate, and closure plate bolts are designed and fabricated in accordance with ASME Code Section III, Subsection NB. The remainder of the layered structural steel is designed and fabricated according to ASME Code Section III, Subsection NF.

Relative to the cask drop and tip-over analyses, the storage pads and foundation are required to have a concrete thickness ≤ 0.91 m (36 in.), a concrete compressive strength ≤ 29 MPa (4,200 psi), and a soil effective modulus of elasticity ≤ 193 MPa (28,000 psi) to ensure flexibility of the concrete pad under the drop and tip-over conditions (HI-STAR 100 Cask System CoC, 1999).

V.2.3 Existing Inspection and Monitoring Program

The HI-STORM FSAR (HI-2002444, 2010) states that visual inspection of the vent screens is required to ensure that the air inlets and outlets are free from obstruction (or alternatively, temperature monitoring may be utilized). The FSAR further states that if an air temperature monitoring system is used in lieu of visual inspection of the air inlet and outlet vents, the thermocouples and associated temperature monitoring instrumentation should be maintained and calibrated in accordance with the user's QA program commensurate with the equipment's safety classification and designated QA category. Other maintenance includes reapplication of corrosion-inhibiting materials on accessible external surfaces and periodic visual inspection of overpack external surfaces.

Radiation monitoring of the ISFSI in accordance with 10 CFR 72.104(c) provides ongoing evidence and confirmation of shielding integrity and performance. If increased radiation doses are indicated by the facility-monitoring program, additional surveys of overpacks should be performed to determine the cause of the increased dose rates. The neutron absorber panels installed in the MPC baskets are not expected to degrade under normal long-term storage conditions. No periodic verification testing of neutron poison material is required.

Maintenance requirements for the HI-STAR 100 system primarily address weathering effects and pre- and post-usage requirements for transportation. Typical maintenance includes reapplication of corrosion inhibiting materials on accessible external surfaces, and seal replacement and leak testing following replacement. The HI-STAR FSAR recommends the following maintenance tasks:

1. <u>Overpack Closure Bolt and Mechanical Seal Replacement.</u> The overpack closure bolts and mechanical seals should be replaced at approximately 20-year intervals. After each replacement, a helium leak test of the overpack containment seals should be performed. Prior to replacement of each seal, the mating surfaces should be cleaned and visually inspected for scratches, pitting or roughness, and affected surface areas should be polished smooth or repaired as necessary. The bolting for the closure plate and the vent and drain port cover plates and port plugs should also be inspected for indications of wear, galling, or indentations on the threaded surfaces prior to reinstallation and closure torqueing. Any bolt or port plug showing any of these indications should be replaced.

2. Neutron Shield Integrity. Periodic verification of the neutron shield integrity should be performed within 5 years prior to each shipment. The measurement results are compared to calculated values to assess the continued effectiveness of the neutron shield.

3. Thermal Performance Testing. For each cask, a periodic thermal performance test should be performed within 5 years prior to each shipment to demonstrate that the thermal capabilities of the cask remain within its design basis.

4. Impact Limiter Inspection. The impact limiters should be visually inspected prior to each use to inspect for surface denting, surface penetrations, and weld cracking. Any areas found to not meet the defined acceptance criteria should be repaired and/or replaced in accordance with the site approved procedures.

In addition, the licensee is to verify that the ISFSI site average yearly temperature does not exceed 27°C (80°F) and that the temperature extremes averaged over a three-day period are > -41°C (-41°F) and < 52°C (125°F) (HI-STAR 100 CoC 72-1008).

ISFSIs located in areas subject to atmospheric conditions that may degrade the storage cask or canister should be evaluated by the licensee on a site-specific basis to determine the frequency for such inspections to ensure long-term performance.

The TLAAs and AMPs to manage aging effects for specific structures and components, materials of construction, and environments are listed in the following tables: HI-STORM and HI-STAR systems in Tables V.2.A1 and V.2.A2, respectively; MPC in Table V.2.B; and concrete basemat (pad) and approach slab (ramp) in Table V.2.C. In these tables, the DCSS components listed in the Structure and/or Component column are classified as “A”, “B”, or “C” according to importance to safety, as described in Section I.2 of this report.

V.2.4 References

10 CFR 72.104, Criteria for Radioactive Materials in Effluents and Direct Radiation from an ISFSI or MRS, Nuclear Regulatory Commission, 1–1–12 Edition, 2012.

10 CFR 72.106, Controlled Areas of an ISFSI or MRS, Nuclear Regulatory Commission, 1–1–12 Edition, 2012.

10 CFR 72.236, Specific Requirements for Spent Fuel Storage Cask Approval and Fabrication, Nuclear Regulatory Commission, 1–1–12 Edition, 2012.

ACI 349–97, Code Requirements for Nuclear Safety Related Concrete Structures, American Concrete Institute, Farmington Hills, MI, 1985.

ACI 318.1–89 and ACI 318.1R–89, Building Code Requirements for Structural Plain Concrete (Revised) and Commentary (Revised), American Concrete Institute, Detroit, MI, 1992.

ASME Boiler and Pressure Vessel Code, Section III, Subsection NB, American Society of Mechanical Engineers, New York, 1995 (with Addenda through 1997).

ASME Boiler and Pressure Vessel Code, Section III, Subsection NF, American Society of Mechanical Engineers, New York, 1995 (with Addenda through 1997).

ASME Boiler and Pressure Vessel Code, Section III, Subsection NG, American Society of Mechanical Engineers, New York, 1995 (with Addenda through 1997).

ASME Boiler and Pressure Vessel Code, Section III, Division 2, Subsection CC-2231-2, American Society of Mechanical Engineers, New York, 1995 (with Addenda through 1997).

ASME Boiler and Pressure Vessel Code, Section III, Division 2, Subsection CC-3400, American Society of Mechanical Engineers, New York, 1995 (with Addenda through 1997).

ASME Boiler and Pressure Vessel Code, Section XI, Subsection IWL, American Society of Mechanical Engineers, New York, 2004.

ASTM C295/C295M–12, Standard Guide for Petrographic Examination of Aggregates for Concrete, American Society for Testing and Materials, West Conshohocken, PA, 2012.

ASTM C33–90, Standard Specification for Concrete Aggregates, American Society for Testing and Materials, West Conshohocken, PA, 1990.

EPRI 1021048, Industry Spent Fuel Storage Handbook, Electric Power Research Institute, Palo Alto, CA, July 2010.

HI-2002444, Final Safety Analysis Report for the HI-STORM 100 Cask System, Revision 8, USNRC Docket No. 72–1014, Holtec International, Marlton, NJ, January 18, 2010.

HI-2012610 Rev. 3, Final Safety Analysis Report for the Holtech International Storage, Transport, and Repository Cask System (HI-STAR 100 Cask System), Docket 72-1008, Holtech International, Inc., Marlton, NJ, Oct. 2009

HI-STAR 100 Cask System Certificate of Compliance, Docket Number 71-9261 U.S. Nuclear Regulatory Commission, Washington, DC, October 12, 2006.

HI-STAR 100 Cask System Certificate of Compliance, Docket Number 72–1008, U.S. Nuclear Regulatory Commission, Washington, DC, October 4, 1999.

Holtec International Final Safety Analysis Report for the HI-STORM 100 Cask System, Docket No. 72-1014, Rev. 11, August 1, 2013 (ML13246A042).

NUREG-1557, Summary of Technical Information and Agreements from Nuclear Management and Resources Council Industry Reports Addressing License Renewal, U.S. Nuclear Regulatory Commission, Washington, DC, 1996.

NUREG-1927, Standard Review Plan for Renewal of Spent Fuel Dry Cask Storage System Licenses and Certificates of Compliance—Final Report, U.S. Nuclear Regulatory Commission, Washington, DC, March 2011.

Table V.2.A1 HI-STORM 100 System: Storage Overpack

Item	Structure and/or Component[1]	Intended Function[2]	Material	Environment	Aging Effect/ Mechanism	Aging Management Program (AMP)	Program Type
V.2.A1-1	Storage overpack: Outer and inner shell (including guidance channels), baseplate, covers for concrete shielding blocks, lid, sector lugs, top ring, lid studs and nuts, upper collar, anchor ring, anchor studs and receptacle, air ducts, screens, gamma shield cross plates, lifting anchor blocks (A or B)	SS, HT, RS, FR	Carbon or low-alloy steel	Air – inside the overpack, uncontrolled; Air – outdoor, marine environment (if applicable)	Loss of material due to general corrosion, pitting, crevice corrosion	IV.M1,"External Surfaces Monitoring of Mechanical Components"	Generic program
V.2.A1-2	Storage overpack: Overpack concrete radiation shield (between inner and outer shells); pedestal shield; overpack lid shield (A)	RS, SS	Plain concrete	Radiation and elevated temperature	Reduction of strength and degradation of shielding performance of concrete due to elevated temperature (>150°F general, >200°F local) and long-term exposure to gamma radiation	The compressive strength and shielding performance of plain concrete is maintained by ensuring that the minimum concrete density is achieved during construction and the allowable concrete temperature and radiation limits are not exceeded. The implementation of 10 CFR 72 requirements and ASME Section XI, Subsection IWL, would not enable identification of the reduction of strength due to elevated temperature and gamma radiation. Thus, for any portions of concrete that exceed specified limits for temperature and gamma radiation, further evaluations are warranted. For normal operation or requested period of extended operation, Subsection CC-3400 of ASME Section III, Division 2, specifies that the concrete temperature limits shall not exceed 66°C (150°F) except for local areas, such as around penetrations, which are not allowed to exceed 93°C (200°F). Also, a gamma radiation dose of 10^{10} rads may cause significant reduction of strength. If significant equipment loads	Further evaluation to determine whether a site-specific AMP is needed

Table V.2.A1 HI-STORM 100 System: Storage Overpack

Item	Structure and/or Component[1]	Intended Function[2]	Material	Environment	Aging Effect/ Mechanism	Aging Management Program (AMP)	Program Type
						are supported by concrete exposed to temperatures exceeding 66°C (150°F) and/or gamma doses above 10^{10} rads, an evaluation is to be made of the ability to withstand the postulated design loads. Higher temperatures than given above may be allowed in the concrete if tests and/or calculations are provided to evaluate the reduction in strength and modulus of elasticity and these reductions are applied to the design calculations.	
V.2.A1-3	Storage overpack: Overpack concrete radiation shield (between inner and outer shells); pedestal shield; overpack lid shield (A)	RS, SS	Plain concrete	Radiation or elevated temperatures	Reduction of strength of concrete and degradation of shielding performance due to reaction with aggregate of concrete	Further evaluation is required to determine if a site-specific AMP is needed to manage cracking and expansion due to reaction with aggregate of concrete in inaccessible areas. A site-specific AMP is not required if (1) as described in NUREG-1557, investigations, tests, and petrographic examinations of aggregates performed in accordance with ASTM C295 and other ASTM reactivity tests, as required, can demonstrate that those aggregates do not adversely react within concrete, or (2) for potentially reactive aggregates, it is demonstrated that the in-place concrete can perform its intended function.	Further evaluation to determine whether a site-specific AMP is needed
V.2.A1-4	Ventilation air openings: Air ducts, screens, gamma shield cross plates (A)	HT	Carbon or low-alloy steel	Air – inside the module, uncontrolled; Air – outdoor	Reduced heat convection capacity due to blockage	IV.M2, "Ventilation System Surveillance Program"	Generic program
V.2.A1-5	Anchor studs (for anchored cask) (A)	SS	SA-193, SA-354, SA-479, SA-540, SA-564, SA-574,	Air – outdoor, marine environment (if applicable)	Loss of preload due to self-loosening; loss of material due to corrosion; cracking due to stress corrosion cracking	IV.M1,"External Surfaces Monitoring of Mechanical Components"	Generic program

Table V.2.A1 HI-STORM 100 System: Storage Overpack

Item	Structure and/or Component[1]	Intended Function[2]	Material	Environment	Aging Effect/ Mechanism	Aging Management Program (AMP)	Program Type
			SA-638				
V.2.A1-6	Anchor studs (for anchored cask) (A)	SS	SA-193, SA-354, SA-479, SA-540, SA-564, SA-574, SA-638	Air – outdoor	Cumulative fatigue damage due to cyclic loading	Fatigue is a time-limited aging analysis (TLAA) to be evaluated for the requested period of extended operation. See III.2 "Fatigue of Metal and Concrete Structures and Components," for acceptable methods for meeting the acceptance criteria in Section 3.5.1 of NUREG-1927.	TLAA
V.2.A1-7	Coatings (if applied) on metallic components (C)	SS Not ITS	Coating	Air – inside the overpack, uncontrolled; Air – outdoor	Loss of coating integrity due to blistering, cracking, flaking, peeling, or physical damage	IV.S2, "Monitoring of Protective Coating on Carbon Steel Structures"	Generic program
V.2.A1-8	Moisture barriers (caulking, sealants, and expansion joint fillers) (C)	SS Not ITS	Elastomers, rubber and other similar materials	Air – outdoor	Loss of sealing due to wear, damage, erosion, tear, surface cracks, or other defects	IV.M1, "External Surfaces Monitoring of Mechanical Components"	Generic program
V.2.A1-9	Lightning protection system (C)	SS Not ITS	Various materials	Air – outdoor	Loss of lightning protection due to wear, tear, damage, surface cracks, or other defects	IV.M1, "External Surfaces Monitoring of Mechanical Components"	Generic program

1. The structures and/or components are classified according to importance to safety, as follows: A = critical to safety operation, B = major impact on safety, and C = minor impact on safety.
2. The important to safety (ITS) functions of the structures and components are as follows: CB = confinement boundary, CC = criticality control, RS = radiation shielding, HT = heat transfer, SS = structural support, and FR = fuel retrievability.

Table V.2.A2 HI-STAR 100 System: Storage and Transportation Overpack

Item	Structure and/or Component[1]	Intended Function[2]	Material	Environment	Aging Effect/ Mechanism	Aging Management Program (AMP)	Program Type
V.2.A2-1	Storage overpack: Closure plate, top flange, lifting trunnions, outer neutron shield enclosure, rupture disk relief device, bottom plate, vent, drain, test port covers (threaded plugs), pocket trunnions, impact limiters, and associated welds (A or B)	SS, HT, RS, FR	Carbon or low-alloy steel, aluminum (impact limiter)	Air – inside the overpack, uncontrolled, radiation, elevated temperature; Air – outdoor, marine environment (if applicable)	Loss of material due to general corrosion, pitting, crevice corrosion	IV.M1,"External Surfaces Monitoring of Mechanical Components"	Generic program
V.2.A2-2	Storage overpack: Closure plate bolts (A)	SS	Low-alloy steel	Air – outdoor, marine environment (if applicable)	Loss of material due to general corrosion, pitting, crevice corrosion; cracking due to stress corrosion cracking	Further evaluation is required to determine if a site-specific AMP is needed to manage cracking and loss of material of the closure plate bolts.	Further evaluation to determine if a site-specific AMP is needed
V.2.A2-3	Outer neutron shield material (A)	CC	Neutron shield material	Air – outdoor, radiation, elevated temperature	Degradation of shielding properties due to long-term exposure to high temperature and gamma and neutron radiation	Degradation of neutron-absorbing materials is a TLAA to be evaluated for the requested period of extended operation. See III.5, "Time-Dependent Degradation of Radiation Shielding Materials," for acceptable methods for meeting the acceptance criteria in Section 3.5.1 of NUREG-1927.	TLAA
V.2.A2-4	Coatings (if applied) (C)	SS Not ITS	Coating	Air – outdoor	Loss of coating integrity due to blistering, cracking, flaking, peeling, or physical damage	IV.S2, "Monitoring of Protective Coating on Carbon Steel Structures"	Generic program

Table V.2.A2 HI-STAR 100 System: Storage and Transportation Overpack

Item	Structure and/or Component[1]	Intended Function[2]	Material	Environment	Aging Effect/ Mechanism	Aging Management Program (AMP)	Program Type
V.2.A2-5	Moisture barriers (caulking, sealants, and expansion joint fillers) (C)	SS Not ITS	Elastomers, rubber and other similar materials	Air – outdoor	Loss of sealing due to wear, damage, erosion, tear, surface cracks, or other defects	IV.M1, "External Surfaces Monitoring of Mechanical Components"	Generic program
V.2.A2-6	Lightning protection system (C)	SS Not ITS	Various materials	Air – outdoor	Loss of lightning protection due to wear, tear, damage, surface cracks, or other defects	IV.M1, "External Surfaces Monitoring of Mechanical Components"	Generic program

1. The structures and/or components are classified according to importance to safety, as follows: A = critical to safety operation, B = major impact on safety, and C = minor impact on safety.
2. The important to safety (ITS) functions of the structures and components are as follows: CB = confinement boundary, CC = criticality control, RS = radiation shielding, HT = heat transfer, SS = structural support, and FR = fuel retrievability.

Table V.2.B HI-STORM 100 or HI-STAR 100 System: Multipurpose Canister (MPC)

Item	Structure and/or Component[1]	Intended Function[2]	Material	Environment	Aging Effect/ Mechanism	Aging Management Program (AMP)	Program Type
V.2.B-1	MPC: Baseplate, shell, lid, port cover, closure ring, and associated welds; fuel basket and fuel spacer (A)	CB, CC, HT, SS, FR	Stainless steel: 304 SS, 304LN SS, 316 SS, 316LN SS	Air – inside the overpack, uncontrolled (external); Helium (internal)	Cumulative fatigue damage due to cyclic loading	Fatigue is a TLAA to be evaluated for the requested period of extended operation. See III.2, "Fatigue of Metal and Concrete Structures and Components," for acceptable methods for meeting the acceptance criteria in Section 3.5.1 of NUREG-1927.	TLAA
V.2.B-2	MPC (access requires extra effort): Baseplate, shell, lid, closure ring, and associated welds; shield lid and bolting (A)	CB, CC, HT, SS, FR	Stainless steel: 304 SS, 304LN SS, 316 SS, 316LN SS	Air – inside the storage overpack, uncontrolled (external)	Cracking and leakage due to stress corrosion cracking when exposed to moisture and aggressive chemicals in the environment	IV.M1, "External Surfaces Monitoring of Mechanical Components" IV.M3, "Welded Canister Seal and Leakage Monitoring Program"	Generic Programs.
V.2.B-3	MPC Internals: Fuel basket, spacer, basket support; heat conduction elements; drain pipe, vent port; neutron absorber panels (in stainless steel sheathing) (A)	CC, CB, HT, SS, FR	Stainless steel, aluminum alloy, borated aluminum or boron carbide /aluminum alloy plate or BORAL composite	Helium, radiation, and elevated temperatures	Degradation of heat transfer, criticality control, radiation shield, confinement boundary, or structural support functions of the MPC internals due to extended exposure to high temperature and radiation.	IV.M5, "Canister/Cask Internals Structural and Functional Integrity Monitoring Program" Degradation of neutron-absorbing materials is a TLAA to be evaluated for the requested period of extended operation. See III.4, "Time-Dependent Degradation of Neutron-Absorbing Materials," for acceptable methods for meeting the acceptance criteria in Section 3.5.1 of NUREG-1927.	Generic program TLAA

1. The structures and/or components are classified according to importance to safety, as follows: A = critical to safety operation, B = major impact on safety, and C = minor impact on safety.
2. The important to safety (ITS) functions of the structures and components are as follows: CB = confinement boundary, CC = criticality control, RS = radiation shielding, HT = heat transfer, SS = structural support, and FR = fuel retrievability.

Table V.2.C HI-STORM 100 or HI-STAR 100 System: Basemat (Pad) and Approach Slab (Ramp)

Item	Structure and/or Component[1]	Intended Function[2]	Material	Environment	Aging Effect/ Mechanism	Aging Management Program (AMP)	Program Type
V.2.C-1	Concrete: Basemat (pad) and approach slab (ramp) (above-grade) (B)	SS	Reinforced Concrete	Air – outdoor	Cracking due to expansion from reaction with aggregates; Increase in porosity/permeability, cracking, or loss of material (spalling, scaling) due to aggressive chemical attack; Cracking and loss of material (spalling, scaling) due to freeze-thaw; Cracking, loss of bond, and loss of material (spalling, scaling) due to corrosion of embedded steel; Increase in porosity and permeability or loss of strength due to leaching of calcium hydroxide and carbonation; Cracking and distortion due to increased stress level from settlement.	IV.S1, "Concrete Structures Monitoring Program" Note: Further evaluation may be required to manage all of these aging effects/mechanisms for the below grade or inaccessible areas of the basemat and approach ramp (See line items V.2.C-2 to -7 for details)	Generic program

Table V.2.C HI-STORM 100 or HI-STAR 100 System: Basemat (Pad) and Approach Slab (Ramp)

Item	Structure and/or Component[1]	Intended Function[2]	Material	Environment	Aging Effect/ Mechanism	Aging Management Program (AMP)	Program Type
V.2.C-2	Concrete: Basemat (pad) and approach slab (ramp) (above-grade) (B)	SS	Reinforced concrete	Groundwater/ soil	Cracking; loss of bond; and loss of material (spalling, scaling) due to corrosion of embedded steel	For facilities with non-aggressive groundwater/soil, i.e., pH >5.5, chlorides <500 ppm, and sulfates <1500 ppm, as a minimum, consider (1) examination of the exposed portions of the below-grade concrete, when excavated for any reason, and (2) periodic monitoring of below-grade water chemistry, including consideration of potential seasonal variations. For facilities with aggressive groundwater/soil (i.e., pH <5.5, chlorides >500 ppm, or sulfates >1500 ppm), and/or where the concrete structural elements have experienced degradation, a site-specific AMP accounting for the extent of the degradation experienced should be implemented to manage the concrete aging during the requested period of extended operation.	Further evaluation to determine whether a site-specific AMP is needed
V.2.C-3	Concrete: Basemat (pad) and approach slab (ramp) (below-grade) (B)	SS	Reinforced concrete	Any environment	Cracking due to expansion from reaction with aggregates	Further evaluation is required to determine if a site-specific AMP is needed to manage cracking and expansion due to reaction with aggregate of concrete in inaccessible areas. A site-specific AMP is not required if (1) as described in NUREG-1557, investigations, tests, and petrographic examinations of aggregates per ASTM C295 and other ASTM reactivity tests, as required, can demonstrate that those aggregates do not adversely react within concrete, or (2) for potentially reactive aggregates, it is demonstrated that the in-place concrete can perform its intended function.	Further evaluation to determine whether a site-specific AMP is needed

Table V.2.C HI-STORM 100 or HI-STAR 100 System: Basemat (Pad) and Approach Slab (Ramp)

Item	Structure and/or Component[1]	Intended Function[2]	Material	Environment	Aging Effect/ Mechanism	Aging Management Program (AMP)	Program Type
V.1.C-4	Concrete: Basemat (pad) and approach slab (ramp) (below-grade) (B)	SS	Reinforced concrete	Groundwater/ soil	Loss of material (spalling, scaling) and cracking due to freeze-thaw	Further evaluation is required for facilities that are located in moderate to severe weathering conditions (weathering index >100 day-inch/yr) (NUREG-1557) to determine if a site-specific AMP is needed. A site-specific AMP is not required if documented evidence confirms that the existing concrete had air entrainment content (as per Table CC-2231-2 of the ASME Code, Section III Division 2), and subsequent inspections of accessible areas did not exhibit degradation related to freeze-thaw. Such inspections should be considered a part of the evaluation. If this condition is not satisfied, then a site-specific AMP is required to manage loss of material (spalling, scaling) and cracking due to freeze-thaw of concrete in inaccessible areas. The weathering index for the continental United States is shown in ASTM C33-90, Fig. 1.	Further evaluation to determine whether a site-specific AMP is needed
V.1.C-5	Concrete (inaccessible areas): Basemat (pad) and approach slab (ramp) (B)	SS	Reinforced concrete	Groundwater/ soil	Increase in porosity and permeability; cracking; loss of material (spalling, scaling) due to aggressive chemical attack	For facilities with non-aggressive groundwater/soil, i.e., pH >5.5, chlorides <500 ppm, and sulfates <1500 ppm, as a minimum, consider (1) examination of the exposed portions of the below-grade concrete, when excavated for any reason, and (2) periodic monitoring of below-grade water chemistry, including consideration of potential seasonal variations. For facilities with aggressive groundwater/soil (i.e., pH <5.5, chlorides >500 ppm, or sulfates >1500 ppm), and/or where the concrete structural elements have experienced degradation, a site-specific AMP accounting for the extent of the degradation experienced should be implemented to manage the concrete aging during the requested period of extended operation.	Further evaluation to determine whether a site-specific AMP is needed

Table V.2.C HI-STORM 100 or HI-STAR 100 System: Basemat (Pad) and Approach Slab (Ramp)

Item	Structure and/or Component[1]	Intended Function[2]	Material	Environment	Aging Effect/ Mechanism	Aging Management Program (AMP)	Program Type
V.1.C-6	Concrete (inaccessible areas): Exterior below-grade; basemat (concrete pad) and approach slab (ramp) (B)	SS	Reinforced concrete	Groundwater/ soil	Increase in porosity and permeability; loss of strength due to leaching of calcium hydroxide and carbonation	Further evaluation is required to determine if a site-specific AMP is needed to manage increase in porosity and permeability due to leaching of calcium hydroxide and carbonation of concrete in inaccessible areas. A site-specific AMP is not required if (1) there is evidence in the accessible areas that the flowing water has not caused leaching and carbonation, or (2) evaluation determined that the observed leaching of calcium hydroxide and carbonation in accessible areas has no impact on the intended function of the concrete structure.	Further evaluation to determine whether a site-specific AMP is needed
V.1.C-7	Concrete: Basemat (pad) and approach slab (ramp) (B)	SS	Reinforced concrete	Air – outdoor; Groundwater/ soil	Reduction of strength, cracking due to differential settlement, and erosion of porous concrete sub-foundation	Further evaluation is required to determine if a site-specific AMP is needed, if a de-watering or any other system is relied upon for control of settlement, to ensure proper functioning of that system through the requested period of extended operation.	Further evaluation to determine whether a site-specific AMP is needed

1. The structures and/or components are classified according to importance to safety, as follows: A = critical to safety operation, B = major impact on safety, and C = minor impact on safety.
2. The important to safety (ITS) functions of the structures and components are as follows: CB = confinement boundary, CC = criticality control, RS = radiation shielding, HT = heat transfer, SS = structural support, and FR = fuel retrievability.

V.3 Transnuclear Metal Spent-Fuel Storage Cask

V.3.1 System Description

The metal spent-fuel storage cask was developed by Transnuclear Inc. (TN) to store irradiated spent-fuel assemblies at an Independent Spent Fuel Storage Installation (ISFSI). The TN spent-fuel storage cask is a vertical cask with bolted lid closure and two metallic O-rings forming the seal. As a storage cask, it provides confinement, shielding, criticality control, and passive heat removal independently of any other facility structures or components. There are three types of TN metal spent-fuel storage casks: TN-32, TN-40 (TN-40HT), and TN-68. The TN-32 cask, approved for use at Surry, North Anna and McGuire ISFSIs, accommodates thirty two (32) intact PWR fuel assemblies. Each fuel assembly is assumed to have a maximum initial enrichment not to exceed 4.05 wt.% U-235 in uranium. Further assumptions limit the fuel to a maximum of 45,000 MWd/MTU burnup, a minimum decay time of 7 years after reactor discharge and a maximum decay heat load of 1.022 kW per assembly for a total of 32.7 kW for a cask.

The TN-40HT cask, approved for use at the Prairie Island site-specific-licensed ISFSI for storage of higher enrichment and higher burnup fuel, accommodates up to forty (40) 14 x 14 PWR fuel assemblies with or without fuel inserts. The maximum allowable initial enrichment of the fuel to be stored in a TN-40HT cask is 5.0 wt.% U-235 in uranium. The maximum bundle average burnup, maximum decay heat, and minimum cooling time for TN-40 (TN-40HT) casks are 45,000 (60,000) MWd/MTU, 0.675 (0.80) kW per assembly, and 10 (18) years, respectively. The cask is designed for a maximum heat load of 27 (32) kW. Only undamaged fuel will be stored in the TN-40 and TN-40HT casks.

The TN-68 cask, approved for use at the Peach Bottom general-licensed ISFSI, accommodates up to 68 BWR fuel assemblies. The maximum allowable initial lattice-average enrichment varies from 3.7 to 4.7 wt% U-235, depending on the B-10 isotope areal density in the basket neutron absorber plates. The maximum bundle average burnup, maximum decay heat, and minimum cooling time are, respectively, 40,000 MWd/MTU, 0.312 kW/assembly, and 10 years for 7x7 fuel assemblies, and 60,000 MWd/MTU, 0.441 kW/assembly, and 7 years for all other fuel assemblies. The cask is designed for a maximum heat load of 30 kW. Damaged fuel that can be handled by normal means may be stored in eight peripheral compartments fitted with damaged-fuel end caps designed to retain gross fragments of fuel within the compartment.

The following description of the TN dry storage casks is based on the USNRC Safety Evaluation Report for TN-32 (USNRC 1996) and the TN Safety Analysis Reports for TN-32 (Transnuclear Inc. 2002, 2004) and TN-68 (Transnuclear Inc. 2005).

The TN metal spent-fuel storage cask body is a right circular cylinder composed of the following components (see Fig. V.3-1): confinement vessel with bolted lid closure, basket for fuel assemblies, gamma and neutron shield, pressure/leak-tightness

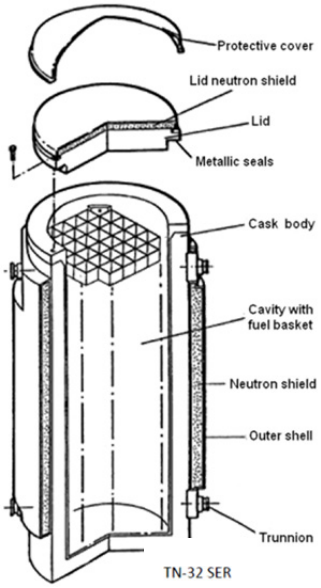

Figure V.3-1: Components of the Transnuclear TN-32 dry shielded canister assembly (TN-32 Safety Evaluation Report, 1996).

monitoring system, weather cover, and trunnions. Figure V.3-1 shows the components of the TN-32 cask, whose confinement-boundary components are shown in Fig. V.3-2. The key dimensions for the TN-32 cask body are provided in Fig. V.3-3.

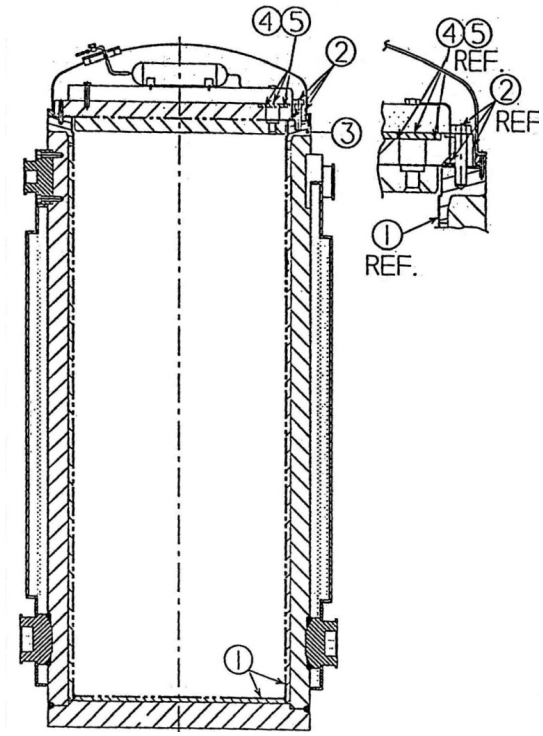

Figure V.3-2: Transnuclear storage cask TN-68 confinement boundary components
TN-68 Amendment 1 to CoC, 2005).

(a) Figure not to scale. Features exaggerated for clarity.
(b) Phantom line (— -- — --) indicates confinement boundary.
(c) Confinement boundary components are listed below:

1. Cask body inner shell
2. Lid assembly outer plate, closure bolts and inner o-ring
3. Bolting flange
4. Vent port cover plate, bolts and seals
5. Drain port cover plate, bolts and seals

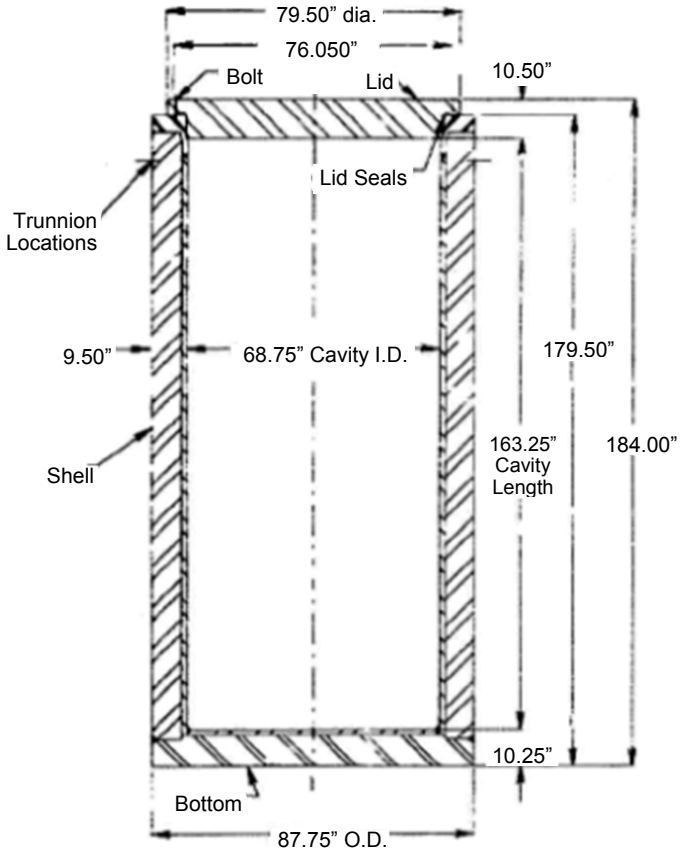

Figure V.3-3: TN-32 cask body key dimensions (TN-32 Safety Evaluation Report, 1996).

V.3.1.1 Confinement Boundary, Closure Lid, and Pressure Monitoring System

In the TN-32 cask, the confinement boundary consists of a welded cylindrical low alloy steel (SA-203. Grade A) inner shell, 38.1 mm (1.50 in.) thick, with an integrally welded low alloy steel bottom closure. A flange forging is welded to the top of the inner shell to accommodate a flanged 127.0-mm (5-in.)-thick low alloy steel lid closure fastened to the flanged forging with 48 bolts. The inner shell has a sprayed metallic aluminum coating for corrosion protection. The confinement vessel is surrounded by a carbon steel gamma shield with a wall thickness of 203.2 mm (8.0 in). and a 222.3-mm (8.75-in.) thick carbon steel bottom. The cask is sealed with a 266.7-mm (10.5-in.)-thick carbon steel closure lid, which is secured to the top flange of the containment vessel by 48 bolts.

The closure lid uses a double-barrier seal system with two metallic O-rings (Helicoflex seals) forming the seal. The seals are made of stainless steel with silver plating. The annular space between the metallic O-rings is connected to a pressure monitoring system (PMS) placed between the lid and the protective cover, also called weather cover (see Fig. V.3-4). Pressure in the tank of the PMS is maintained above the pressure in the cask cavity to prevent either flow of fission gases out of or air into the cask cavity, which, under normal storage conditions, is pressurized above atmospheric pressure with helium. The transducers/switches monitor the pressure in the annular space between the metallic O-rings to provide an indication of seal failure before any release is possible. Two identical transducers/switches are provided to ensure a functional system through redundancy.

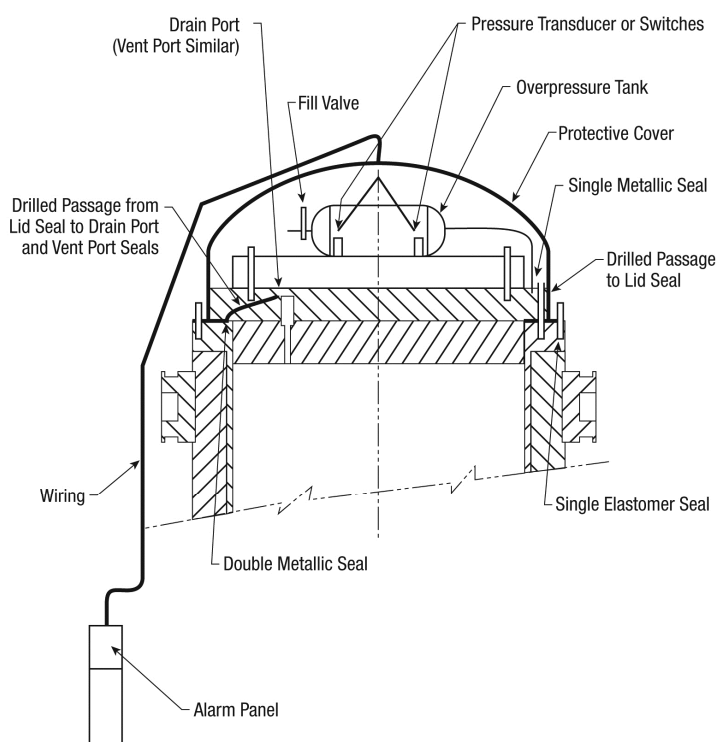

Figure V.3-4: TN-32 cask seal pressure monitoring system (TN-32 Safety Evaluation Report, 1996).

The TN-32 cask body has four carbon steel trunnions that are welded to the gamma shield. Two of these are located near the top of the cylindrical steel forging, spaced 180 degrees apart, and are used for lifting the cask. The remaining two trunnions are 180 degrees apart and located near the bottom of the cask. The lower trunnions are used to rotate the unloaded cask between vertical and horizontal positions. The lifting trunnions have an effective diameter of 220 mm (8.67 in.) and are hollow to permit installation of neutron-shielding material and eliminate a path for neutron streaming.

The TN-32 cask lid has three confinement access ports: drain port, vent port and overpressure system port. The drain and vent ports are covered by a bolted stainless steel closure plate having a double-barrier seal system with two metallic O-rings (Helicoflex seals, 2014) forming the seal, similar to the one used for the lid closure. The overpressure port is also covered by a bolted stainless steel closure plate but has a single metallic O-ring forming the seal. The closure lid has drilled interseal passageways connecting the annular space between the seals at each port to the annular space between the closure-lid seals, as shown in Fig. V.3-4. The cavity drain line penetrates the closure lid and terminates in the bottom of the cask cavity. This line is used to drain water from the cask cavity after underwater fuel loading. It is also used during the drying and helium back-filling of the cask cavity. The drain valve is of the quick-disconnect type; it was not analyzed as part of the primary confinement system. The cavity vent valve is identical to the drain valve. Overall, the cask is 5.13 m (201.9 in.) long and 2.48 m (97.8 in.) in diameter. The cask weighs approximately 104.8 tons (230,990 pounds) when loaded.

The all-metal Helicoflex seal used in the TN metal casks has a built-up structure with inner and outer liners, and a central helical energizing spring [see Figs. V.3-5 (a) and (b)]. Sealing is accomplished by plastic flow of the outer liner against the mating sealing surfaces. The helical spring aids in keeping a sufficient load against the outer liner to follow temperature fluctuations and small deformations. Helicoflex seals can be manufactured to meet leak-tight or better sealing criteria. Leakage rates of less than 1×10^{-9} atm-cc/s (helium) can be maintained using seals with a slightly larger wire gauge for the internal spring than those for "standard" sealing. The seal is not generally considered reusable (Warrant et al. 1989). The seals' rated service temperature is 280°C (536°F), per NUREG/CR-6886 (Adkins et al. 2013].

The TN-32 confinement vessel has a cylindrical cavity with an inert gas atmosphere. The cavity is 1.75 m (68.8 in.) in diameter and 4.15 m (163.3 in.) long and holds a fuel basket with 32 compartments, each 221.0 mm (8.7 in.) square, to locate and support the PWR fuel assemblies. A PWR assembly typically consists of zircaloy fuel rods containing uranium dioxide fuel pellets. The fuel rods are assembled into a square array, spaced and supported laterally by grid structures with top and bottom fittings for vertical support and handling. The basket assembly also transfers heat from the fuel assembly to the cask body wall and provides neutron absorption to satisfy nuclear criticality requirements, especially during loading and unloading operations that occur underwater. During storage, with the cavity dry and sealed from the environment, criticality control measures within the cask are not necessary because of the low reactivity of the fuel in the dry cask and the assurance that no water can enter the cask during storage.

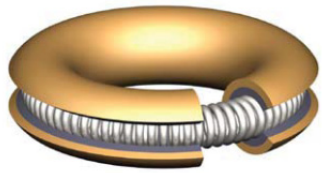

Figure V.3-5(a): Helicoflex seal

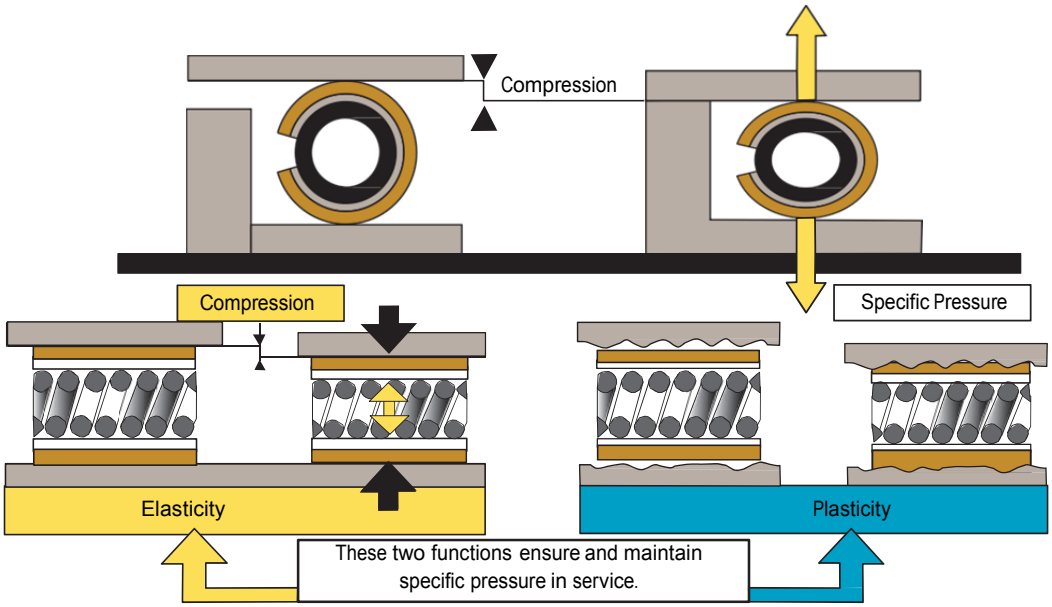

Figure V.3-5(b): A sketch illustrating the sealing concept of the Helicoflex seal (Helicoflex Spring Energized Seals)

V.3.1.2 Fuel Basket Assemblies and Shieldings

The fuel cavities in the basket are formed by a sandwich of aluminum plates, BORAL plates, and stainless steel boxes. The stainless steel fuel-compartment box sections are attached by a series of stainless steel plugs that pass through the 12.7-mm (0.5-in.)-thick aluminum plates and the 1.02-mm (0.04-in.)-thick poison plates and are fusion-welded to both adjacent stainless steel box sections. The aluminum provides the heat conduction paths from the fuel assemblies to the cask cavity wall. The poison material provides the necessary criticality control. The basket is guided into the cask body and held in place by aluminum rails that run the axial length of the cask body, as shown in Fig. V.3-6.

Surrounding the outside of the confinement vessel wall is a steel gamma shield (SA-516, Grade 70) with a wall thickness of 203.2 mm (8.0 in.), as shown in Fig. V.3-7. The top end of the gamma shield is welded to the confinement vessel flange. The bottom end of the gamma shield is made of the same material and has a thickness of 222.3 mm (8.75 in.). The bolted closure lid provides the gamma shielding at the upper end of the cask body. Neutron emissions from the stored fuel are attenuated by a neutron shield, consisting of a borated polyester resin compound, enclosed in long aluminum boxes that surround the gamma shield. The resin compound is 114.3 mm (4.50 in.) thick and is cast into long, slender aluminum containers, which are held in place by a 12.7-mm (0.50-in.)-thick painted SA-516 Grade 70 steel shell constructed of two half-cylinders. Neutron emissions from the top of the cask are attenuated by a 101.6-mm (4.0-in.)-thick polypropylene disc, encased in a

6.35-mm (0.25-in.)-thick steel shell and placed on the top of the closure lid. There is no neutron shielding provided on the bottom of the cask.

The inside surfaces of the inner shell and bottom have a sprayed metallic coating of aluminum for corrosion protection. The external surfaces of the cask are metal, sprayed or painted for ease of decontamination and corrosion protection. The neutron shield, PMS, and shield cap are placed on top of the cask after fuel is removed from the spent-fuel pool and loaded into the cask. A stainless steel overlay is applied to the O-ring seating surfaces on the body for corrosion protection. A protective cover, 9.5 mm (0.375 in.) thick, with a Viton polymeric O-ring is bolted to the top of the cask body to provide weather protection for the lid penetrations and other components.

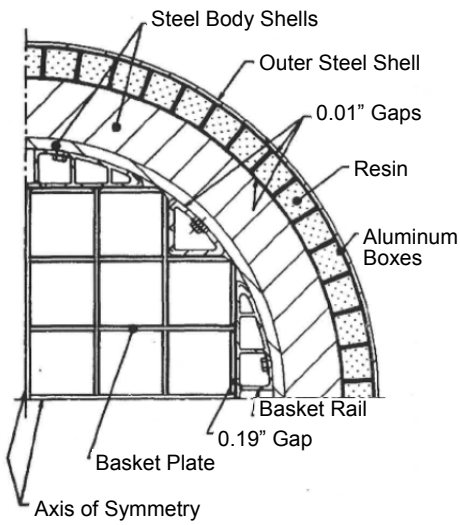

Figure V.3-6: Radial cross-section of TN-32 cask showing basket, basket rails and gamma and neutron shields (TN-32 Safety Evaluation Report, 1996).

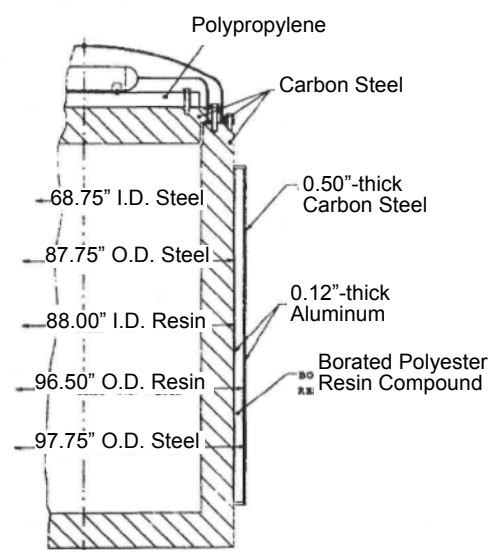

Figure V.3-7: TN-32 cask shielding configuration (TN-32 Safety Evaluation Report, 1996).

The heat rejection capability of the cask maintains the maximum fuel rod clad temperature below 328°C (622.4°F), on the basis of normal operating conditions with a 32.7 kW decay heat load, 38°C (100°F) ambient air, and full insolation. The fuel assemblies are stored in an inert helium gas atmosphere. The cast shielding features of the cask are designed to maintain the maximum combined gamma and neutron surface dose rate at less than 200 mrem/hr under normal operating conditions.

V.3.1.3 Concrete Pad and Operating Experience

The TN-32 casks are stored on a 0.91-m (3-ft)-thick reinforced concrete slab in a free-standing, vertical orientation. Typically, two or three concrete pads are utilized at an ISFSI, with each pad containing an array of several casks arranged in two rows. One possible configuration for a dry storage installation is shown in Fig. V.3-8. The operating experience for TN-32 casks includes several instances of chipped external coatings on the casks and corrosion of lid bolts and outer metallic seals due to intrusion of rainwater in the vicinity of the seal at the Surry site operated by Dominion. It was determined that the Conax connector seal for the electrical connector in the cask protective cover was leaking because of improper installation of the connectors. To reduce the likelihood of

protective-cover leakage, the pressure sensing instrumentation was relocated outside the cover. This relocation required routing pressure sensor tubing through the side of the cover and mounting the pressure switches on the side of the cask. The original openings for the Conax connectors in the top of the protective cover were welded closed (Virginia Electric 2002). Dominion has backfitted these covers to preclude leakage. Future covers will incorporate the backfit modification.

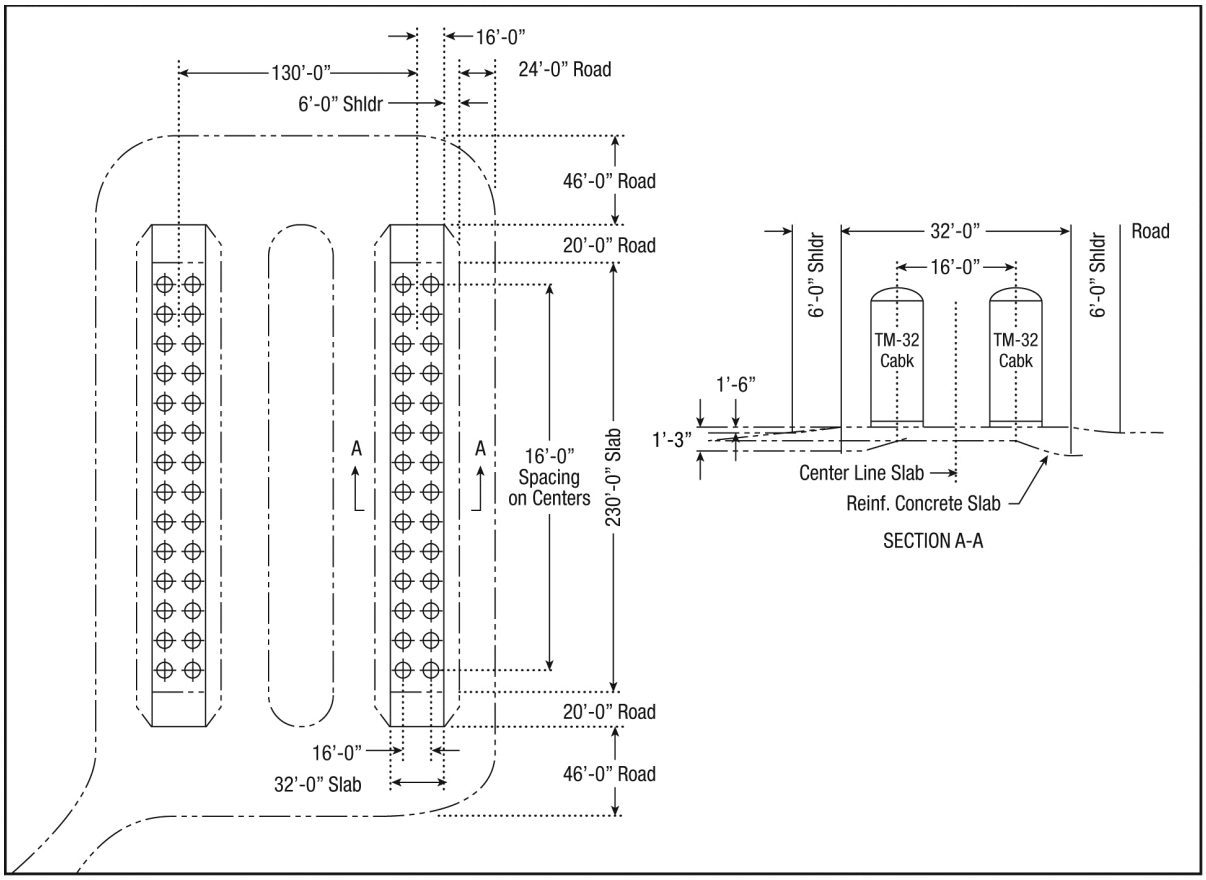

Figure V.3-8: Typical vertical storage of Transnuclear metal cask. Note for TN-32, the spacing on centers is 16 ft. (TN-32 Safety Evaluation Report, 1996).

V.3.2 Codes and Service Life

The minimum design life of TN-32 casks is 25 years. The ASME Boiler and Pressure Vessel Code is the governing code for design, fabrication, examination, and acceptance criteria of TN cask components. The confinement vessel is designed in accordance with the ASME Code, Section III, Subsection NB. The basket assembly and other components important to safety (trunnions, neutron shieldings, protective cover) are designed in accordance with the ASME Code, Section III, Subsection NF and American Welding Society (AWS) Structural Welding Codes.

There is no concrete or reinforced concrete in the TN storage system, except the concrete pad. The concrete pad is designed in accordance with ACI codes and standards and is designed with a nominal design concrete compressive strength of 20.7 MPa (3,000 psi) at 28 days.

The TN-32 cask is designed for 0.26 g horizontal ground motion, 0.17 g vertical ground motion, and 579 kmph (360 mph) wind speed.

V.3.3 Existing Inspection and Monitoring Program

Typical maintenance tasks involve recalibration of seal monitoring instrumentation, visual inspection, and repainting the casks with protective coatings. Transnuclear Inc. suggests no special maintenance techniques. The metallic O-rings are designed to maintain their sealing capability until the cask is opened. If a drop in pressure in the overpressure system indicates a leak, all the gaskets must be replaced. The overpressure system has two identical pressure transducers/switches for redundancy. Replacements are necessary if they malfunction.

The aging management of TN casks in the Surry ISFSI relies on the Dry Storage Cask Inspection Activities Program during the period of extended operation. The scope of the program involves (1) the continuous pressure monitoring of the in-service dry storage casks, (2) the quarterly visual inspection of all dry storage casks that are in-service at the Surry ISFSI, (3) a visual inspection of the TN storage cask seal cover area, which is to be performed prior to the end of the original operating license period, and (4) the visual inspection of the normally inaccessible areas of casks in the event they are lifted in preparation for movement or an environmental cover is removed for maintenance.

The TLAAs and AMPs to manage aging effects for specific structures and components, materials of construction, and environments of the TN metal spent-fuel storage cask are given in Tables V.3.A, V.3.B and V.3.C. In these tables, the DCSS components listed in the Structure and/or Component column are classified as “A”, “B”, or “C” according to importance to safety, as described in Section I.2.

V.3.4 References

Adkins, H. E., et al., Spent Fuel Transportation Package Response to the Baltimore Tunnel Fire Scenario, NUREG/CR-6886, Rev. 2, PNNL-15313, U.S. Nuclear Regulatory Commission, Washington, DC, 2013.

ASME Boiler and Pressure Vessel Code, Section III, Subsection NB, American Society of Mechanical Engineers, New York, 1992.

ASME Boiler and Pressure Vessel Code, Section III, Subsection NF, American Society of Mechanical Engineers, New York, 1992.

ASTM C33–90, Standard Specification for Concrete Aggregates, American Society for Testing and Materials, West Conshohocken, PA, 1990.

Helicoflex Spring Energized Seals, Performance Datasheets, Technetics Group, EnPro Industries Companies, Columbia, SC (https://www.techneticsgroup.com/bin/Helicoflex.pdf).

NRC, Safety Evaluation Report for the Transnuclear, Inc., Dry Storage Cask (TN-32), Docket No. 72-1021 (M-56), U.S. Nuclear Regulatory Commission, Office of Nuclear Material Safety and Safeguards, Washington, DC, November 1996.

NUREG-1557, Summary of Technical Information and Agreements form Nuclear Management and Resources Council Industry Reports Addressing License Renewal, U.S. Nuclear Regulatory Commission, Washington, DC, 1991.

NUREG-1927, Standard Review Plan for Renewal of Spent Fuel Dry Cask Storage System Licenses and Certificates of Compliance—Final Report, U.S. Nuclear Regulatory Commission, Washington, DC, March 2011.

Transnuclear Inc. Final Safety Analysis Report – TN-32, Amendment 15, Surry Independent Spent Fuel Storage Installation, Docket No. 72-2, License No. SNM-2501, June 2002

Transnuclear Inc. Final Safety Analysis Report – TN-32, Revision 16, Surry Independent Spent Fuel Storage Installation, Docket No. 72-2, License No. SNM-2501, June 2004

Transnuclear Inc. Final Safety Analysis Report - TN-68, Amendment 1, Rev. 0, Docket No. 72-1027, ML071290322, January 2005

Virginia Electric and Power Company, Surry Independent Spent Fuel Storage Installation (ISFSI) License Renewal Application, Docket No. 72-2, April 29, 2002.

Warrant, M. M., and Ottinger, C. A., Compilation of Current Literature on Seals, Closures, and Leakage for Radioactive Material Packagings, SAND-88-1015, Sandia National Laboratories, Albuquerque, NM, 1989.

Table V.3.A Transnuclear Metal Spent-Fuel Storage Cask: Storage Cask

Item	Structure and/or Component[1]	Intended Function[2]	Material	Environment	Aging Effect/ Mechanism	Aging Management Program (AMP)	Program Type
V.3.A-1	Storage cask external surfaces: Radial neutron shield box assembly, radiation shield body shell, trunnions, protective cover and bolting (A)	RS, HT, SS	Carbon steel; low-alloy steel	Air – outdoor	Loss of material due to corrosion	IV.M1, "External Surfaces Monitoring of Mechanical Components"	Generic program
V.3.A-2	Storage cask components under protective cover: Overpressure tank and connecting lines, pressure transducers and switches, top lid neutron shield, top lid, confinement vessel flange, and bolting (A)	RS, HT, SS	Carbon steel; low-alloy steel	Air – enclosed space, uncontrolled	Loss of material due to corrosion	IV.M1, "External Surfaces Monitoring of Mechanical Components"	Generic program
V.3.A-3	Top lid neutron shield (A)	RS	Polypropylene (encased in carbon steel)	Radiation and elevated temperature in air environment	Degradation of shielding properties due to exposure to high temperature and radiation	Degradation of neutron-absorbing materials is a time-limited aging analysis (TLAA) to be evaluated for the requested period of extended operation. See III.5, "Time-Dependent Degradation of Radiation- Shielding Materials," for acceptable methods for meeting the acceptance criteria in Section 3.5.1 of NUREG-1927.	TLAA

Table V.3.A Transnuclear Metal Spent-Fuel Storage Cask: Storage Cask

Item	Structure and/or Component[1]	Intended Function[2]	Material	Environment	Aging Effect/ Mechanism	Aging Management Program (AMP)	Program Type
V.3.A-4	Radial neutron shield; inside lifting trunnion (A)	RS	Borated polyester (encased in aluminum); neutron-absorbing material	Radiation and elevated temperature in air environment	Degradation of shielding material due to radiation exposure	Degradation of radiation-shielding materials is a TLAA to be evaluated for the requested period of extended operation. See III.5, "Time-Dependent Degradation of Radiation-Shielding Materials," for acceptable methods for meeting the acceptance criteria in Section 3.5.1 of NUREG-1927.	TLAA
V.3.A-5	Top closure lid bolting (A)	SS	Steel	Air – enclosed space, uncontrolled	Cumulative fatigue damage/fatigue	Fatigue is a TLAA to be evaluated for the period of extended operation. See III.2, "Fatigue of Metal and Concrete Structures and Components," for acceptable methods for meeting the acceptance criteria in Section 3.5.1 of NUREG-1927.	TLAA
V.3.A-6	Pressure monitoring system: Pressure sensor inner and outer housing and associated elastomer seals and bolts. (B)	Monitoring system	Steel, elastomers, rubber and similar materials	Air – enclosed space, uncontrolled; Air - outdoor	Loss of material due to general, pitting, and crevice corrosion	IV.M1, "External Surfaces Monitoring of Mechanical Components"	Generic program
V.3.A-7	Moisture barriers (caulking, sealants) (if applicable) (C)	SS Not ITS	Elastomers, rubber and similar materials	Air – outdoor	Loss of sealing due to wear, damage, erosion, tear, surface cracks, or other defects	IV.M1, "External Surfaces Monitoring of Mechanical Components"	Generic program
V.3.A-8	Coatings on metallic components (if applicable) (C)	SS Not ITS	Coating	Air – inside the overpack, uncontrolled, or Air – outdoor	Loss of coating integrity due to blistering, cracking, flaking, peeling, or physical damage	IV.S2, "Protective Coating Monitoring and Maintenance Program"	Generic program

Table V.3.A Transnuclear Metal Spent-Fuel Storage Cask: Storage Cask

Item	Structure and/or Component[1]	Intended Function[2]	Material	Environment	Aging Effect/ Mechanism	Aging Management Program (AMP)	Program Type
V.3.A-9	Lightning Protection System (if applicable) (C)	SS Not ITS	Various materials	Air – outdoor	Loss of lightning protection due to wear, tear, damage, surface cracks, or other defects	IV.M1, "External Surfaces Monitoring of Mechanical Components"	Generic program

1 The structures and/or components are classified according to importance to safety, as follows: A = critical to safety operation, B = major impact on safety, and C = minor impact on safety.
2 The important to safety (ITS) functions of the structures and components are as follows: CB = confinement boundary, CC = criticality control, RS = radiation shielding, HT = heat transfer, SS = structural support, and FR = fuel retrievability.

Table V.3.B Transnuclear Metal Spent-Fuel Storage Cask: Internal Contents of the Confinement Vessel

Item	Structure and/or Component	Intended Function	Material	Environment	Aging Effect/ Mechanism	Aging Management Program (AMP)	Program Type
V.3.B-1	Inner shell, flange and bottom (A)	CB, SS, RS, HT	Carbon steel	Limited air (external), Helium (internal)	Cumulative fatigue damage/fatigue	Fatigue is a TLAA to be evaluated for the requested period of extended operation. See III.2, "Fatigue of Metal and Concrete Structures and Components," for acceptable methods for meeting the acceptance criteria in Section 3.5.1 of NUREG-1927.	TLAA
V.3.B-2	Cover plates and bolting: Drain, vent and overpressure port (A)	CB, SS, RS, HT	Stainless steel, low-alloy steel	Air – enclosed space, uncontrolled (external); Helium (internal)	Cumulative fatigue damage/fatigue	Fatigue is a TLAA to be evaluated for the requested period of extended operation. See III.2, "Fatigue of Metal and Concrete Structures and Components," for acceptable methods for meeting the acceptance criteria in Section 3.5.1 of NUREG-1927.	TLAA
V.3.B-3	Cover plates and bolting (access requires removal of overpressure tank and top lid neutron shield): Drain, vent and overpressure port (A)	CB, SS, HT	Low-alloy steel	Air – enclosed space, uncontrolled (external); Helium (internal)	Loss of material due to corrosion	IV.M1, "External Surfaces Monitoring of Mechanical Components" Further evaluation is required to determine if periodic inspection is needed to manage loss of material due to corrosion for these components.	Generic program
V.3.B-4	Helicoflex seals (includes stainless steel cladding on sealing surface): Lid, drain, vent and overpressure port closures (A)	CB	Aluminum, silver, stainless steel, Ni-base alloys	Air – enclosed space, uncontrolled (external), Helium (internal)	Loss of sealing forces due to stress relaxation and creep of the metallic O-rings, corrosion and loss of preload of the closure bolts	IV.M4, "Bolted Cask Seal and Leakage Monitoring Program"	Generic program

Table V.3.B Transnuclear Metal Spent-Fuel Storage Cask: Internal Contents of the Confinement Vessel

Item	Structure and/or Component	Intended Function	Material	Environment	Aging Effect/ Mechanism	Aging Management Program (AMP)	Program Type
V.3.B-5	Confinement vessel internal components Fuel basket, top and bottom fittings, aluminum and stainless steel plates, neutron absorber plates, stainless steel plugs, basket rails, drain pipe (A)	CC, SS, HT, RS, FR	Stainless steel, aluminum, BORAL, borated composite	Helium, radiation, and elevated temperatures	Degradation of heat transfer, criticality control, radiation shield, or structural support function due to extended exposure to high temperature and radiation	IV.M5, "Canister/Cask Internals Structural and Functional Integrity Monitoring Program" Degradation of neutron-absorbing materials is a TLAA to be evaluated for the requested period of extended operation. See III.4, "Time-Dependent Degradation of Neutron-Absorbing Materials," for acceptable methods for meeting the acceptance criteria in Section 3.5.1 of NUREG-1927.	Generic program TLAA

1 The structures and/or components are classified according to importance to safety, as follows: A = critical to safety operation, B = major impact on safety, and C = minor impact on safety.
2 The important to safety (ITS) functions of the structures and components are as follows: CB = confinement boundary, CC = criticality control, RS = radiation shielding, HT = heat transfer, SS = structural support, and FR = fuel retrievability.

Table V.3.C Transnuclear Metal Spent-Fuel Storage Cask: Basemat (Pad) and Approach Slab (Ramp)

Item	Structure and/or Component[1]	Intended Function[2]	Material	Environment	Aging Effect/ Mechanism	Aging Management Program (AMP)	Program Type
V.3.C-1	Concrete: Basemat (pad) and approach slab (ramp) (above-grade) (B)	SS	Reinforced concrete	Air – outdoor	Cracking due to expansion from reaction with aggregates; Increase in porosity/permeability, cracking, or loss of material (spalling, scaling) due to aggressive chemical attack; Cracking and loss of material (spalling, scaling) due to freeze-thaw; Cracking, loss of bond, and loss of material (spalling, scaling) due to corrosion of embedded steel; Increase in porosity and permeability, or loss of strength due to leaching of calcium hydroxide and carbonation; Cracking and distortion due to increased stress level from settlement.	IV.S1, "Concrete Structures Monitoring Program" Note: Further evaluation may be required to manage all of these aging effects/mechanisms for the below grade or inaccessible areas of the basemat and approach ramp (See line items V.3.C-2 to -7 for details)	Generic program

Table V.3.C Transnuclear Metal Spent-Fuel Storage Cask: Basemat (Pad) and Approach Slab (Ramp)

Item	Structure and/or Component[1]	Intended Function[2]	Material	Environment	Aging Effect/ Mechanism	Aging Management Program (AMP)	Program Type
V.3.C-2	Concrete: Basemat (pad) and approach slab (ramp) (below-grade) (B)	SS	Reinforced concrete	Groundwater/ soil	Loss of material (spalling, scaling) and cracking due to freeze-thaw	Further evaluation is required for facilities that are located in moderate to severe weathering conditions (weathering index >100 day-inch/yr) (NUREG-1557) to determine if a site-specific AMP is needed. A site-specific AMP is not required if documented evidence confirms that the existing concrete had air entrainment content (as per Table CC-2231-2 of the ASME Code, Section III Division 2), and subsequent inspections of accessible areas did not reveal degradation related to freeze-thaw. Such inspections should be considered a part of the evaluation. If this condition is not satisfied, then a site-specific AMP is required to manage loss of material (spalling, scaling) and cracking due to freeze-thaw of concrete in inaccessible areas. The weathering index for the continental United States is shown in ASTM C33-90, Fig. 1.	Further evaluation to determine whether a site-specific AMP is needed
V.3.C-3	Concrete: Basemat (pad) and approach slab (ramp) (below-grade) (B)	SS	Reinforced concrete	Groundwater/ soil	Cracking due to expansion from reaction with aggregates	Further evaluation is required to determine if a site-specific AMP is needed to manage cracking and expansion due to reaction with aggregate of concrete in inaccessible areas. A site-specific AMP is not required if (1) as described in NUREG-1557, investigations, tests, and petrographic examinations of aggregates per ASTM C295 and other ASTM reactivity tests, as required, can demonstrate that those aggregates do not adversely react within concrete, or (2) for potentially reactive aggregates, it is demonstrated that the in-place concrete can perform its intended function.	Further evaluation to determine whether a site-specific AMP is needed

Table V.3.C Transnuclear Metal Spent-Fuel Storage Cask: Basemat (Pad) and Approach Slab (Ramp)

Item	Structure and/or Component[1]	Intended Function[2]	Material	Environment	Aging Effect/ Mechanism	Aging Management Program (AMP)	Program Type
V.3.C-4	Concrete: Basemat (pad) and approach slab (ramp) (below-grade) (B)	SS	Reinforced concrete	Groundwater/ soil	Cracking; loss of bond; and loss of material (spalling, scaling) due to corrosion of embedded steel	For facilities with non-aggressive groundwater/soil, i.e., pH >5.5, chlorides <500 ppm, and sulfates <1500 ppm, as a minimum, consider (1) examination of the exposed portions of the below-grade concrete, when excavated for any reason, and (2) periodic monitoring of below-grade water chemistry, including consideration of potential seasonal variations. For facilities with aggressive groundwater/soil (i.e., pH <5.5, chlorides >500 ppm, or sulfates >1500 ppm), and/or where the concrete structural elements have experienced degradation, a site-specific AMP accounting for the extent of the degradation experienced should be implemented to manage the concrete aging during the requested period of extended operation.	Further evaluation to determine whether a site-specific AMP is needed
V.3.C-5	Concrete (inaccessible areas): Basemat (pad) and approach slab (ramp) (B)	SS	Reinforced concrete	Groundwater/ soil	Increase in porosity and permeability; cracking; loss of material (spalling, scaling) due to aggressive chemical attack	For facilities with non-aggressive groundwater/soil, i.e., pH >5.5, chlorides <500 ppm, and sulfates <1500 ppm, as a minimum, consider (1) examination of the exposed portions of the below-grade concrete, when excavated for any reason, and (2) periodic monitoring of below-grade water chemistry, including consideration of potential seasonal variations. For facilities with aggressive groundwater/soil (i.e., pH <5.5, chlorides >500 ppm, or sulfates >1500 ppm), and/or where the concrete structural elements have experienced degradation, a site-specific AMP accounting for the extent of the degradation experienced should be implemented to manage the concrete aging during the requested period of extended operation.	Further evaluation to determine whether a site-specific AMP is needed

Table V.3.C Transnuclear Metal Spent-Fuel Storage Cask: Basemat (Pad) and Approach Slab (Ramp)

Item	Structure and/or Component[1]	Intended Function[2]	Material	Environment	Aging Effect/ Mechanism	Aging Management Program (AMP)	Program Type
V.3.C-6	Concrete (inaccessible areas): Exterior below-grade; basemat (concrete pad) and approach slab (ramp) (B)	SS	Reinforced concrete	Groundwater/ soil	Increase in porosity and permeability; loss of strength due to leaching of calcium hydroxide and carbonation	Further evaluation is required to determine if a site-specific AMP is needed to manage increase in porosity and permeability due to leaching of calcium hydroxide and carbonation of concrete in inaccessible areas. A site-specific AMP is not required if (1) there is evidence in the accessible areas that the flowing water has not caused leaching and carbonation, or (2) evaluation determined that the observed leaching of calcium hydroxide and carbonation in accessible areas have no impact on the intended function of the concrete structure.	Further evaluation to determine whether a site-specific AMP is needed
V.3.C-7	Concrete: Basemat (pad) and approach slab (ramp) (B)	SS	Reinforced Concrete	Air – outdoor; Groundwater/ soil	Reduction of strength, cracking due to differential settlement, and erosion of porous concrete sub-foundation	Further evaluation is required to determine if a site-specific AMP is needed, if a de-watering or any other system is relied upon for control of settlement, to ensure proper functioning of that system through the requested period of extended operation.	Further evaluation to determine whether a site-specific AMP is needed

1. The structures and/or components are classified according to importance to safety, as follows: A = critical to safety operation, B = major impact on safety, and C = minor impact on safety.
2. The important to safety (ITS) functions of the structures and components are as follows: CB = confinement boundary, CC = criticality control, RS = radiation shielding, HT = heat transfer, SS = structural support, and FR = fuel retrievability.

V.4 NAC International Inc. (NAC) Dry Storage Cask Technology

V.4.1 System Description

NAC International Inc. (formerly Nuclear Assurance Corporation), has developed a number of cask and canister systems for the dry storage of spent nuclear fuel (SNF). Of these, three are listed in 10 CFR 72.214 as currently being approved under a general license for the storage of spent fuel under the conditions specified in their Certificates of Compliance (CoCs). These three storage systems, all of which are canister-plus-overpack designs, are NAC-MPC (for Multi-Purpose Canister), NAC-UMS (for Universal Multi-Purpose Canister System), and MAGNASTOR (for Modular Advanced Generation Nuclear All-purpose STORage). In addition, NAC developed four earlier stand-alone casks, all variations of the same design. These are the NAC-S/T (for storage/transport – identified in 72.214 as NAC-S/T for 26 intact assemblies), NAC-C28 S/T, NAC-I28 S/T (for 28 consolidated assemblies and 28 intact assemblies respectively), and NAC-STC casks. The NAC-I28 S/T design is presently being used at the Surry nuclear plant under a site-specific license (Surry ISFSI 2005). General licenses were also granted for the NAC-S/T (I26) and NAC-C28 S/T designs in 1990, but these licenses expired on August 17, 2010, and these systems are not presently in use. The NAC-STC cask is not currently licensed for used-fuel storage under a general license, but is approved for site-specific application and is licensed for direct fuel loading and dry storage canister content under Certificate of Compliance (CoC) No. 71-9235 for used fuel transport. Summary descriptions of all seven of these storage systems are given here.

V.4.1.1 NAC-S/T (I26), C28 S/T, I28 S/T, and STC

NAC has developed four variations of the metal cask storage technology, namely, the NAC-S/T (I26 - Docket No. 72-1002), NAC-C28 S/T (Docket No. 72-1003), NAC-I28 S/T (Docket No. 72-1020), and NAC-STC (Docket No. 72-1013). All of these designs are stand-alone casks without the need for an overpack. The CoCs for all four of these casks has expired, and they can no longer be employed for used-fuel storage under a general site license. However, the NAC-I28 S/T cask is currently approved for storage of spent fuel at Surry 1 and 2 under a site-specific license (Docket No. 72-2), and the NAC-STC cask is licensed for spent-fuel transport under CoC No. 71-9235. Because of the similarities in the design of these four casks, they will be described together here. Selected design parameters are summarized in Table V.4-1, and the basic configuration of the NAC metal cask technology is shown in Fig. V.4-1.

All four cask designs consist of a pair of concentric stainless steel cylinders separated by a poured-in chemical lead gamma radiation shield. A solid neutron shield surrounds the outer shell, which, in turn, is encased in a stainless steel shell approximately 6.35 mm (0.25 in.) thick. The fuel baskets are designed to hold 26 or 28 fuel assemblies. Four trunnions can be attached to the top of the cask, permitting a redundant load path lift in addition to a two-trunnion single failure-proof lift configuration. Two trunnions or rotational pockets are provided at the bottom of the cask to permit rotating the cask from a vertical loading and unloading configuration to the horizontal transport configuration. Gamma and neutron radiation shielding is provided by lead, stainless steel, and NS-4-FR, a poured-in-place solid borated synthetic polymer that surrounds the outer shell along the cavity region. Different cask bottom and lid configurations are made of lead or NS-4-FR encased in a stainless steel shell. A stainless steel NS-4-FR neutron shield cap may be placed on top of the cask after fuel loading to further reduce radiation in the storage configuration.

The casks are sealed to maintain an inert helium atmosphere using a closure lid with a double-barrier seal system and two metallic O-ring seals. There are four access ports in the cask: (1) a cavity drain port, (2) a cavity vent port, (3) an inner seal leak test port, and (4) a pressure monitoring port.

The fuel basket is in a right circular cylinder configuration with 26 or 28 aluminum fuel tubes that are separated and supported by an aluminum and stainless steel grid of spacers and tie bars, or a stacked disk configuration of stainless steel support disks and aluminum heat transfer disks with stainless steel fuel tubes. Sheets of BORAL are attached to the outside of the tubes to absorb neutrons. Impact limiters made of redwood and balsa wood inside a stainless steel shell are attached to the top and bottom of the NAC-STC cask during transport.

Table V.4-1 Parameters for Selected NAC Dry Storage Metal Cask Technology. All are stand-alone casks without an overpack and all have bolted primary containment boundary closures.

	NAC-S/T	NAC-C28 S/T	NAC-I28 S/T	NAC-STC
Fuel Type	PWR	PWR	PWR	PWR
No. of Assemblies	26	28	28	26
Maximum Heat Load (kilowatts)	26	20	15.6	22.1
Minimum Cooling Time (years)	5	10	10	5
Maximum Fuel Burnup (MWd/ton)	35,000	35,000	35,000	40,000/45,000[a]
Storage/Transport Cask:				
Length [m (in.)]	4.66 (183.3)	4.66 (183.3)	4.66 (183.3)	4.90 (193)
Cavity Height [m (in.)]	4.22 (166)	4.22 (166)	4.22 (166)	4.19 (165)
Outer Diameter [m (in.)]	2.39 (94)	2.39 (94)	2.39 (94)	2.51 (99)
Inner Diameter [m (in.)]	1.65 (64.8)	1.65 (64.8)	1.65 (64.8)	1.80 (71)
Outer SS Shell Thickness [mm (in.)]	66.8 (2.63)	66.8 (2.63)	66.8 (2.63)	67.3 (2.65)
Inner SS Shell Thickness [mm (in.)]	38.1 (1.5)	38.1 (1.5)	38.1 (1.5)	38 (1.5)
Pb γ Shield Thickness [mm (in.)]	81.3 (3.2)	81.3 (3.2)	81.3 (3.2)	94 (3.7)
Neutron Shield Thickness [mm (in.)]	178 (7.0)	178 (7.0)	178 (7.0)	140 (5.5)
Base Thickness [mm (in.)]	224 (8.8)	224 (8.8)	224 (8.8)	348 (13.7)
Top Neutron Shield Cap Thickness [mm (in.)]	152.4 (6.0)	96.5 (3.8)	76 (3.0)	230 (9.0)
Top Lid Thickness [mm (in.)]	215.9 (8.5)	215.9 (8.5)	215.9 (8.5)	133 (5.25)
Loaded Weight [tonne (tons)]	95.3 (105.1)	<113 (<125)	98 (108)	107 (117)
Empty Weight [tonne (tons)]	73.6 (81.1)	75 (83)	-	-
Currently Licensed for Storage	No	No	Yes[b]	No[c]
NRC Part 72 Docket	72-1002	72-1003	72-1020, 72-2[b]	72-1013, 71-9235[c]
Facilities Where Used	-	-	Surry 1, 2	-

[a] 40,000 for storage/45,000 for directly loaded transport.
[b] Site-specific license for use at Surry 1 and 2.
[c] Licensed for transport under CoC No. 71-9235, Rev. 12, Docket No. 71-9235, U.S. Nuclear Regulatory Commission, October 5, 2010. Acceptable as a reference in a Safety Analysis Report in a 10CFR72 Site-Specific spent fuel storage license application.

As indicated above, only the NAC-I28 cask is presently being used for spent-fuel storage, under a site-specific license at the Surry nuclear plant. The NAC-STC cask is currently licensed for the

transport of spent Yankee Rowe Class and Connecticut Yankee PWR nuclear fuel as well as fuel from the LaCrosse BWR in dry storage canisters under CoC No. 71-9235.

V.4.1.2 NAC-MPC

The NAC-MPC system is a metal dry cask storage system (DCSS) designed to store intact pressurized water reactor (PWR) fuel assemblies. Certificate of Compliance No. 1025 for this system was originally issued on April 10, 2000, and was most recently amended on October 16, 2010. The principal components of the NAC-MPC storage system are the transportable storage canister (TSC), the vertical concrete cask, and the transfer cask. As the name implies, the NAC-MPC system is designed for both the transport and storage of SNF, and the dual-purpose TSC is licensed for transport in the NAC-STC transportation cask under CoC No. 71-9235. The NAC-MPC system is presently in use at the Yankee Rowe, Haddam Neck (Connecticut Yankee), and LaCrosse nuclear power plants. Design parameters for the NAC-MPC systems for these three plants are given in Table V.4-2.

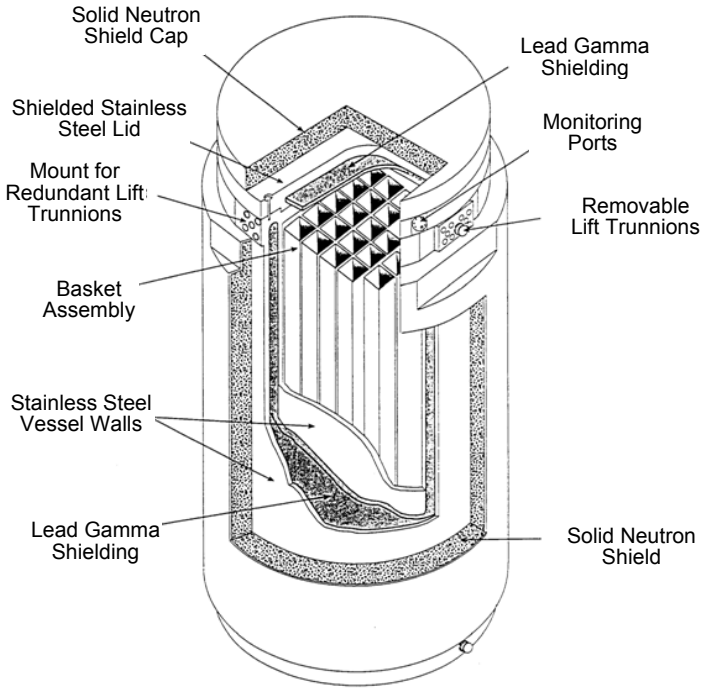

Figure V.4-1: NAC metal storage cask technology (NEI 98-01)

The TSC assembly consists of a right circular cylindrical stainless steel shell with a welded bottom plate, a fuel basket, a shield lid, two penetration port covers, and a structural lid. The cylindrical shell plus the bottom plate and lids constitutes the confinement boundary. The stainless steel fuel basket is in a right circular cylinder configuration with 36 fuel tubes (for Yankee Rowe PWR Class fuel), 26 fuel tubes (for Haddam Neck PWR fuel), and 68 fuel tubes (32 damaged fuel cans and 36 undamaged fuel assemblies for LaCrosse BWR fuel) laterally supported by a series of stainless steel support disks, which are retained by spacers on radially located tie rods. Aluminum heat transfer disks are spaced midway between the support disks and are the primary path for conducting heat from the spent-fuel assemblies in the TSC wall. The SNF assemblies are contained in stainless steel fuel tubes. The square fuel tubes are encased with BORAL sheets on all four sides for criticality control.

Table V.4-2 Selected Parameters for NAC-MPC, NAC-UMS, and MAGNASTOR Dry Storage Systems (adapted from EPRI 1021048).

	NAC-MPC			NAC-UMS		MAGNASTOR	
Fuel Type	Yankee Rowe PWR	Haddam Neck PWR	LaCrosse BWR	PWR	BWR	PWR	BWR
No. of Assemblies	36	24–26	68	24	56	37	87
Maximum Heat Load (kilowatts)	12.5	17.5	4.4	23	23	35.5	33
Minimum Cooling Time (years)	8	6	28	5	5	4	4
Maximum Fuel Burnup (MWd/ton)	36,000	43,000	22,000	60,000	45,000	60,000	60,000
Dual-Purpose Canister:							
Length [m (in.)]	3.11 (122.5)	3.86 (151.8)	2.95 (116.3)	4.45–4.87 (175.1–191.8)		4.69–4.87 (184.8–191.8)	
Cavity Height [m (in.)]	2.88 (113.5)	3.61 (142)	2.76 (108.5)	4.15–4.57 (163.3–180.0)		4.39–4.57 (173.0–180.0)	
Outer Diameter [m (in.)]	1.79 (70.6)		1.79 (70.6)	1.70 (67.1)		1.83 (72)	
Inner Diameter [m (in.)]	1.76 (69.4)		1.77 (69.6)	1.67 (65.8)		1.80 (71)	
Wall Thickness [mm (in.)]	15 (0.6)		13 (0.5)	15 (0.6)		13 (0.5)	
Base Thickness [mm (in.)]	25 (1.0)	46 (1.8)	32 (1.25)	46 (1.8)		69.9 (2.75)	
Structural Lid Thickness [mm (in.)]	76 (3.0)		178 (7.0)	76 (3.0)		229 (9.0)	
Loaded Weight [tonne (tons)]	24.8 (27.4)	29.8 (32.9)	24.8 (27.4)	32.0–34.5 (35.3–38.0)		45.8 (50.5)	46.7 (51.5)
Transfer Cask:							
Length [m (in.)]	3.39 (133.4)	4.14. (162.9)	3.39 (133.4)	4.77–5.19 (187.9–204.5)		4.85 – 5.02 (191.0 – 197.6))	
Outer Diameter [m (in.)]	-	-		2.16 (85.3)		2.24 (88)	
Loaded Weight with water [tonne (tons)]	64.8 (71.5)	83.1 (91.6)	66.3 (73.0)	88.0–94.6 (97–104.2)		101.5 -103.5 (111.8 - 114.0)	
Storage Cask:							
Length [m (in.)]	4.06 (160)	4.84 (190.6)	4.06 (160)	5.31 – 5.74 (209.2 -225.9)		5.54–5.72 (218.3–225.3)	
Outer Diameter [m (in.)]	3.25 (128)		3.25 (128)	3.45 (136)		3.45 (136)	
Loaded Weight [tonne (tons)]	93.8(103.4)	113.7(125.9)	89 (98)	137.7–146.9 (151.7–162.0)		145.2–150.7 (160.0–166.0)	
Currently Licensed for Storage	Yes			Yes		Yes	
NRC Part 72 Docket	72–1025			72–1015		72–1031, (71-9356)[a]	
Facilities Where Used	Yankee Rowe	Haddam Neck	LaCrosse	Maine Yankee, Palo Verde Catawba, McGuire		McGuire[b], Catawba[b] Zion[b]	

[a] CoC No. 71-9356 for use as a transport system pending(Letter, 2011).
[b] 29 total MAGNASTOR systems loaded as of June 17, 2014.

For the Yankee Rowe Class MPC, an alternative fuel basket design with enlarged fuel tubes in the four corner locations has also been authorized. In this alternative configuration, the BORAL sheet and stainless steel cover are removed from each side of the fuel tube in the four corner locations.

The vertical concrete cask serves as the storage overpack for the TSC and provides structural support, shielding, protection from environmental conditions, and natural convection cooling of the TSC during storage. The storage cask is fabricated from reinforced concrete with a structural steel liner. The vertical concrete cask has an annular air passage to allow the natural circulation of air around the TSC. The air inlet and outlet vents take non-planar paths to the vertical concrete cask cavity to minimize radiation streaming. The spent-fuel decay heat is transferred from the fuel assemblies to the tubes in the fuel basket and through the heat-transfer disks to the TSC wall. Heat flows by convection from the TSC wall to the circulating air, as well as by radiation from the TSC wall to the vertical concrete cask liner. The heat flow to the circulating air from the TSC wall and the vertical concrete cask liner is exhausted through the air outlet vents. The top of the vertical concrete cask is closed by a shield plug, consisting of a carbon steel plate for gamma shielding and solid neutron shielding material, covered by a carbon steel lid. The lid is bolted in place and has tamper-indicating seals on two of the bolts.

The transfer cask provides shielding during TSC movements between workstations, the vertical concrete cask, or the transport cask. It is a multi-wall (steel/lead/NS-4-FR/steel) design and has a bolted top-retaining ring to prevent a loaded canister from being inadvertently removed through the top of the transfer cask. Hydraulically operated retractable bottom shield doors on the transfer cask are used during unloading operations. To minimize contamination on the TSC, clean water is circulated in the gap between the transfer casks and the TSC during spent-fuel pool loading operations.

V.4.1.3 NAC-UMS

The NAC-UMS has been certified for the storage and transport of 24 PWR or 56 BWR SNF assemblies. The storage component is designated as a Universal Storage System and includes a TSC with a welded closure, a vertical concrete cask, and a transfer cask. The NAC-UMS system received storage CoC No. 72-1015, which expires on November 20, 2020. The TSC is licensed for transport in the UMS Universal Transport Cask Package, CoC No. 71-9270. The NAC-UMS system is presently in use at the Maine Yankee, Palo Verde, Catawba and McGuire nuclear plants. Design parameters for the NAC-UMS system are given in Table V.4-2.

The TSC is the confinement system for the stored fuel. The TSC assembly consists of a right circular cylindrical shell with a welded bottom plate, a fuel basket, a shield lid, two penetration port covers, and a structural lid. The cylindrical shell plus the bottom plate and lids constitute the confinement boundary. The stainless steel fuel basket is in a right circular cylinder configuration with either 24 (PWR) or 56 (BWR) stainless steel fuel tubes laterally supported by a series of stainless steel or carbon steel support disks. The square fuel tubes in the PWR basket include BORAL sheets on all four sides for criticality control. The square fuel tubes in the BWR basket may include BORAL sheets on up to two sides for criticality control. Aluminum heat transfer disks are spaced midway between the support disks and are the primary path for conducting heat from the SNF assemblies to the TSC wall for the PWR basket. There are three TSC configurations of different lengths for PWR and site-specific contents and two TSC configurations of different lengths for BWR contents. BWR SNF rods/assemblies must be intact. PWR and site-specific SNF rods/assemblies may be intact or damaged, with damaged fuel rods/assemblies placed in a fuel can. A canister has also been certified for the storage of greater than class C (GTCC) low-level radioactive waste.

The storage overpack, designated the vertical concrete cask, provides structural support, shielding, protection from environmental conditions, and natural convection cooling of the canister during storage. The concrete wall and steel liner provide the neutron and gamma radiation shielding for the storage cask. The concrete cask has an annular air passage to allow the natural circulation of air around the canister to remove the decay heat from the SNF stored in the TSC. The top of the concrete cask is closed by a shield plug and lid, which incorporates a carbon steel plate as gamma radiation shielding as well as solid neutron-shielding material. A carbon steel lid that provides additional gamma radiation shielding is installed above the shield lid. The lid is bolted in place and has tamper-indicating seals on two of the installation bolts. There are three vertical concrete cask configurations of different lengths for PWR and site-specific contents and two vertical concrete cask configurations of different lengths for BWR contents.

The transfer cask is used for the vertical transfer of the TSC between workstations and the vertical concrete cask or the UMS transport cask. The transfer cask incorporates a multi-wall design and a top-retaining ring, which is bolted in place to prevent a loaded canister from being inadvertently removed through the top of the transfer cask. The transfer cask has retractable bottom shield doors to facilitate the transfer of the TSC from the transfer cask into the vertical concrete cask or UMS transportation cask. Figure V.4-2 shows the transfer configuration in which a transfer cask transfers a loaded TSC to a vertical concrete cask for the UMS system.

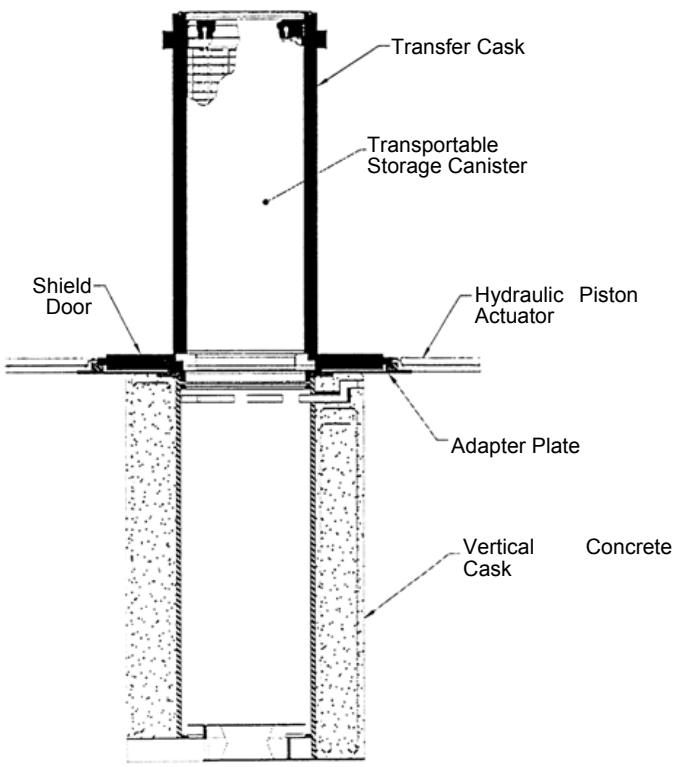

Figure V.4-2: NAC-UMS dual-purpose storage system, CoC No. 72-1015 (NEI 98-01).

V.4.1.4 NAC-MAGNASTOR®

The MAGNASTOR System is a dual-purpose (storage and transport) canister system with a maximum capacity of 37 PWR fuel assemblies or 87 BWR assemblies. The storage component includes a TSC with a welded closure, a concrete storage cask, and a transfer cask. The MAGNASTOR system received storage CoC No. 72-1031, which expires on February 4, 2029. NAC has applied for a license for the MAGNASTOR TSC for transport in a compatible MAGNASTOR transport cask, MAGNATRAN, under CoC No. 71-9356, and approval of this CoC is currently under review by the NRC. MAGNASTOR systems have been loaded at the McGuire, Catawba, and Zion NPPs. 29 MAGNASTOR systems have been loaded and placed on the sites Independent Spent Fuel Storage Installations (ISFSIs) as of June 17, 2014. Design parameters for the MAGNASTOR system are given in Table V.4-2.

The TSC provides the confinement system for the stored fuel. The TSC assembly consists of a right circular cylindrical shell with a welded bottom plate, a fuel basket, a closure lid, a closure ring, and two sets of redundant penetration port covers. The cylindrical shell plus the bottom plate, closure lid, and welded inner port covers are stainless steel and constitute the confinement boundary. The electroless nickel coated carbon steel fuel basket is in a circular cylinder configuration with either 37 PWR or 87 BWR fuel assembly locations. The fuel assembly locations in the PWR and BWR baskets include neutron-absorber panels on up to four sides for criticality control. Each neutron-absorber panel is covered by a stainless steel sheet to protect the material during fuel loading and unloading and to maintain it in position (NAC 2005).

The closure lid is positioned inside the TSC on the lifting lugs above the fuel basket assembly following fuel loading. After the closure lid is placed on the TSC, the TSC is moved to a workstation, and the closure lid is welded to the TSC. The vent and drain ports are penetrations through the lid, which provide access for auxiliary systems to drain, dry, and backfill the TSC. The drain port has a threaded fitting for installing the drain tube. The drain tube extends the full length of the TSC and ends in a sump in the base plate. The vent port also provides access to the TSC cavity for draining, drying, and backfilling operations. Following completion of backfilling, the port covers are installed and welded in place.

The concrete storage cask is the storage overpack for the TSC and provides structural support, shielding, protection from environmental conditions, and natural convection cooling of the TSC during long-term storage. The concrete cask is a reinforced concrete structure with a structural steel inner liner and base. The reinforced concrete wall and steel liner provide the neutron and gamma radiation shielding for the stored spent fuel. Inner and outer reinforcing steel (rebar) assemblies are encased within the concrete. The reinforced concrete wall provides the structural strength to protect the TSC and its contents during natural-phenomena events such as tornado wind loading and wind-driven missiles and during non-mechanistic tip-over events. The concrete surfaces remain accessible for inspection and maintenance over the life of the cask, so that any necessary restoration actions may be taken to maintain shielding and structural conditions. The concrete cask provides an annular air passage to allow the natural circulation of air around the TSC to remove the decay heat from the contents. The lower air inlets and upper air outlets are steel-lined penetrations in the concrete cask body. Each air inlet/outlet is covered with a screen. The weldment baffle directs the air upward and around the pedestal that supports the TSC. Decay heat is transferred from the fuel assemblies to the TSC wall by conduction, convection, and radiation. Heat is removed by conduction and convection from the TSC shell to the air flowing upward through the annular air

passage and exhausting out through the air outlets. The passive cooling system is designed to maintain the peak fuel cladding temperature below acceptable limits during long-term storage. The concrete cask thermal design also maintains the bulk concrete temperature below the American Concrete Institute limits under normal operating conditions. The inner liner of the concrete cask incorporates standoffs that provide lateral support to the TSC in side-impact accident events. A carbon steel and concrete lid is bolted to the top of the concrete cask. The lid reduces skyshine radiation and provides a cover to protect the TSC from the environment and postulated tornado missiles.

The transfer cask provides shielding during TSC movements between workstations, the concrete cask, or the transport cask. It is a multiwall (steel/lead/NS-4-FR/steel) design with retractable (hydraulically operated) bottom shield doors that are used during loading and unloading operations. During TSC loading and handling operations, the shield doors are closed and secured. After placement of the transfer cask on the concrete cask or transport cask, the doors are retracted using hydraulic cylinders and a hydraulic supply. The TSC is then lowered into a concrete cask for storage or into a transport cask for offsite shipment. Sixteen penetrations, eight at the top and eight at the bottom, are available to provide a water supply to the transfer cask annulus. Penetrations not used for water supply or draining are capped. The transfer cask annulus is isolated using inflatable seals located between the transfer cask inner shell and the TSC near the upper and lower ends of the transfer cask. During TSC closure operations, clean water is added through these penetrations into the annulus region to remove heat generated by the spent-fuel contents. The cooling-water circulation is maintained through completion of TSC activities and is terminated to allow movement of the transfer cask for TSC transfer operations. A similar process of clean-water circulation is used during in-pool fuel loading to minimize contamination of the TSC outside surfaces. The transfer cask penetrations can also be used for the introduction of forced air or gas at the bottom of the transfer cask to achieve cooling of the TSC contents in case of the failure of the cooling water system. Alternatively, the loaded TSC may be returned to the spent-fuel pool for in-pool cooling.

A rendering of the MAGNASTOR storage configuration and a cutaway of the storage overpack are provided in Fig. V.4-3.

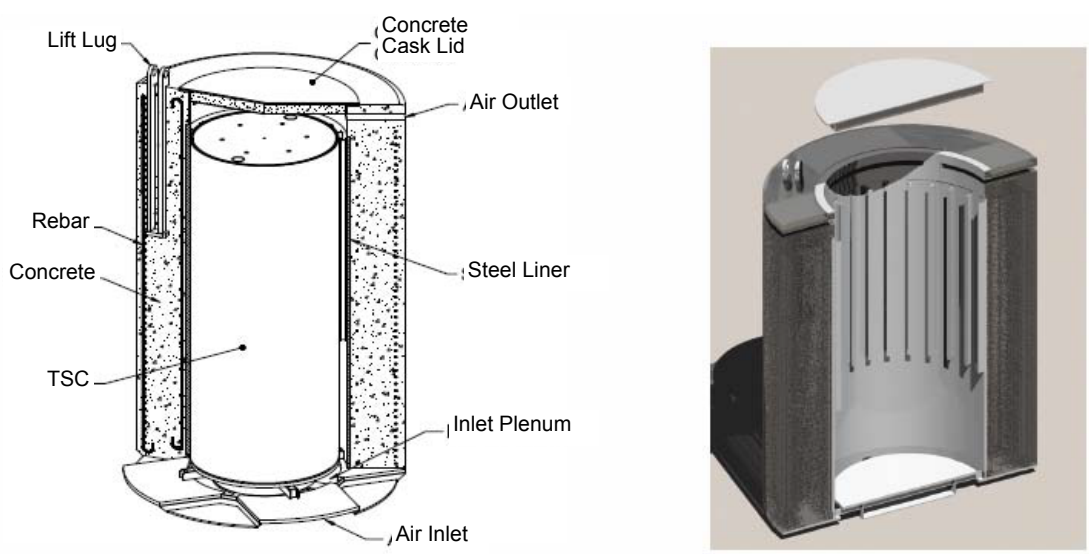

Figure V.4-3: MAGNASTOR dual-purpose storage/transport system, CoC No. 72-1031 (Pennington 2005).

V.4.2 Design Codes and Service Life

The NAC-UMS Maine Yankee canister and fuel basket assembly are designed, fabricated, and inspected in accordance with ASME Boiler and Pressure Vessel Code, Section III, rules for Class 1 components and core support structures, and are Code stamped "N" and "NPT." The NAC-MPC, standard NAC-UMS and MAGNASTOR canisters and fuel basket structures are designed and fabricated in general compliance with the ASME Code, Section III, Division 1, Subsections NB and NG, respectively. However, some exceptions are taken, and the components are not Code stamped. The American Concrete Institute Specifications ACI 349 and ACI 318 govern the concrete cask design and construction, respectively, for all three of these storage systems.

The design basis for temperature for the Maine-Yankee UMS storage system is a 24°C (76°F) maximum average yearly temperature. The 3-day average ambient temperature is 41°C (106°F), or less, and the allowed temperature extremes, averaged over a 3-day period, are greater than -40°C (-40°F) and less than 56°C (133°F). The design-basis earthquake seismic acceleration levels at the top surface of the ISFSI pad are 0.38 g in the horizontal direction and 0.253 g in the vertical direction. The maximum heat load is 23 kW for both PWR and BWR fuel. The NAC-UMS system is designed and analyzed for a 50-year service life.

For the NAC-MPC storage system, the maximum average yearly temperature is 24°C (75°F). The design-basis 3-day average ambient temperature is 38°C (100°F) or less, and the allowed temperature extremes, averaged over a 3-day period, are greater than -40°C (-40°F) and less than 52°C (125°F). The design-basis earthquake seismic acceleration levels at the top surface of the ISFSI pad are 0.25 g in the horizontal direction and 0.167 g in the vertical direction. The maximum heat load is 12.5 kW for Yankee Rowe PWR fuel and 17.5 kW for Haddam Neck PWR fuel. The NAC-MPC system is designed and analyzed for a minimum 50-year service life.

For the MAGNASTOR storage system, the maximum average yearly temperature is 24°C (76°F). The design-basis 3-day average ambient temperature is 41°C (106°F) or less, and the allowed temperature extremes, averaged over a 3-day period, are greater than -40°C (-40°F) and less than 56°C (133°F). The maximum design-basis earthquake acceleration at the ISFSI pad top surface to prevent cask tip-over without sliding is $\leq$0.37 g in the horizontal direction and $\leq$0.25 g in the vertical direction. Note that MAGNASTOR site-specific horizontal accelerations greater than 0.37g are acceptable with cask sliding and site-specific qualification that the cask does not slide off the pad and impact of adjacent casks do not exceed non-mechanistic tip-over g loads. The maximum heat load is 33 kW for BWR fuel and 35.5 kW for PWR fuel. The design life for the MAGNASTOR system is 50 years.

The maximum surface dose rates for the NAC-UMS concrete cask are not to exceed 50 mrem/hour (neutron + gamma) on the side (on the concrete surfaces), 50 mrem/hour (neutron + gamma) on the top, and 100 mrem/hour (neutron + gamma) at air inlets and outlets. For the NAC-MPC concrete cask, the corresponding limits are 50 mrem/hour (neutron + gamma) on the side (on the concrete surfaces), 55 mrem/hour (neutron + gamma) on the top, and 200 mrem/hour (neutron + gamma) average of the measurements at the air inlets and outlets. The dose rates for the MAGNASTOR concrete cask are not to exceed 95 mrem/hour gamma and 5 mrem/hour neutron on the vertical concrete surfaces and 450 mrem/hour (neutron + gamma) on the top.

V.4.3 Existing Inspection and Monitoring Program

For the NAC canister designs, the canister shield-lid-to-shell weld is performed in the field following fuel assembly loading. The canister is then pneumatically pressure tested, although limited accessibility for leakage inspections precludes an ASME Code-compliant hydrostatic test. The shield lid-to-shell weld is also leak tested to the leak-tight criteria of ANSI N14.5. The vent port and drain port cover welds are examined by root and final liquid penetrant (PT) examination. If the weld is completed in a single weld pass, only a final surface PT examination is performed. The vent port and drain port cover welds are not pressure tested, but are tested to the leak-tight criteria of ANSI N14.5. The structural lid enclosure weld is not pressure tested, but is examined by progressive PT or ultrasonic testing and final surface PT.

The assembled storage systems at the ISFSI are subject to daily air inlet and outlet temperature monitoring, which may be done directly or remotely. A visual inspection must be performed if a decline in thermal performance is noted. All NAC storage systems in use at an ISFSI must be inspected within 4 hours after the occurrence of an off-normal, accident, or natural-phenomena event in the area of the ISFSI. This inspection should specifically verify that all the concrete cask inlets and outlets are free of blockage or obstruction. At least one-half of the inlets and outlets on each concrete cask must be cleared of blockage or debris within 24 hours to restore air circulation. The concrete cask and canister must also be inspected if they experience a drop or a tip-over. Following a natural-phenomena event, the ISFSI site must be inspected to verify that the concrete casks have not been repositioned to result in higher dose rates at the ISFSI boundary.

Additionally, thermal testing is to be performed for the first NAC-UMS system placed in service with a heat load ≥10 kW and the first MAGNASTOR system with a heat load ≥30 kW. A letter report summarizing the results of the measurements with respect to analyses of the actual canister content must then be submitted to the NRC in accordance with 10 CFR 72.4 within 60 days of placing the loaded cask on the ISFSI pad. The report is to include a comparison of the calculated mass flow of the storage system at the loaded heat load to the measured mass flow. A report is not required for the systems that are subsequently loaded, provided that the performance of the first system placed in service with a heat load of ≥10 kW for the NAC-UMS storage system or ≥30 kW for the MAGNASTOR system is demonstrated by the comparison of the calculated and measured mass flow rates.

The TLAAs and AMPs to manage aging effects for specific structures and components, materials of construction, and environments of the NAC S/T storage cask are given in Tables V.4.A1, V.4.A2, V.4.B1, V.4.B2, and V.4.C. In these tables, the DCSS components listed in the “Structure and/or Component” column are classified as “A”, “B”, or “C” according to importance to safety, as described in Section I.2. Because the NAC-S/T, C28 S/T, and STC casks are no longer licensed for storage in the United States and are not in current use, these casks are not included in the tables.

V.4.4 References

10 CFR Part 72, Licensing Requirements for the Independent Storage of Spent Nuclear Fuel, High-Level Radioactive Waste, and Reactor-Related Greater than Class C Waste, Nuclear Regulatory Commission, 1-1-12 Edition 2012.

10 CFR 72.4, Communications, Nuclear Regulatory Commission, 1-1-12 Edition, 2012.

10 CFR 72.214, List of Approved Spent Fuel Storage Casks, Nuclear Regulatory Commission, 1-1-12 Edition, updated July 10, 2014.

ACI 318–95/318R-95, Building Code Requirements for Structural Concrete and Commentary, American Concrete Institute, Farmington Hills, MI, 1995.

ACI 349–85, Code Requirements for Nuclear Safety Related Concrete Structures, American Concrete Institute, Farmington Hills, MI, 1985.

ANSI-N14.5, Radioactive Materials – Leakage Tests on Packages for Shipment, American National Standards Institute, 1997.

ASME Boiler and Pressure Vessel Code, Section III, Rules for Construction of Nuclear Power Plant Components, Division 1, Subsections NB and NG, Class 1 Components, American Society for Mechanical Engineers, New York, 2004.

ASME Boiler and Pressure Vessel Code, Section XI, Rules for Inservice Inspection of Nuclear Power Plant Components, American Society of Mechanical Engineers, New York, 2004.

ASTM C33-90, Standard Specification for Concrete Aggregates, ASTM International, West Conshohocken, PA, 1990.

Certificate of Compliance No. 72-1002 for the NAC S/T Cask, Rev. 0, ML033020120, Nuclear Regulatory Commission, Washington, DC, August 17, 1990.

Certificate of Compliance No. 72-1003 for the NAC-C28 S/T Cask, Rev. 0, ML033020125, Nuclear Regulatory Commission, Washington, DC, August 17, 1990.

Certificate of Compliance No. 71-9235 for the NAC-STC Cask, Rev. 12, ML102780430, Nuclear Regulatory Commission, Washington, DC, October 5, 2010.

Certificate of Compliance No. 71-9270 for Radioactive Material Packages, Rev. 2, B(U)F-96, ML052230524, Nuclear Regulatory Commission, Washington, DC, April 30. 1997.

Certificate of Compliance No. 72-1015 for NAC-UMS Spent Fuel Storage Cask, Appendix A, Technical Specifications, Amendment 5, ML090120459, Nuclear Regulatory Commission, Washington, DC, January 12, 2009.

Certificate of Compliance No. 72-1025 for NAC-MPC Spent Fuel Storage Cask, Appendix A, Technical Specifications, Amendment 4, ML043020537, Nuclear Regulatory Commission, Washington, DC, October 27, 2004.

Certificate of Compliance No. 72-1031 for MAGNASTOR Spent Fuel Storage Cask, Appendix A, Technical Specifications, Amendment 0, ML090350566, Nuclear Regulatory Commission, Washington, DC, February 4, 2009.

EPRI 1021048, Industry Spent Fuel Storage Handbook, Electric Power Research Institute, Palo Alto, CA, July 2010.

Jana, D., and Tepke, D., Corrosion of Aluminum Metal in Concrete – A Case Study, Proceedings of the 32nd Conference on Cement Microscopy, ICMA, New Orleans, Louisiana, March, 2010. Retrieved from http://www.cmc-concrete.com/ publication link on February 28, 2013.

Letter, Anthony L. Patko, NAC International to U.S. Nuclear Regulatory Commission, Submission of an Application for a NRC Certificate of Compliance (CoC) for the NAC MAGNATRAN Transport Cask, ML110260236, January 19, 2011.

NAC International, MAGNASTOR Safety Analysis Report, Revision 5B, ML060690292, NAC International, Norcross, GA, December 2005.

NEI 98-01, Industry Spent Fuel Storage Handbook, Nuclear Energy Institute, Washington, DC, May 1998

NUREG-1557, Summary of Technical Information and Agreements from Nuclear Management and Resources Council Industry Reports Addressing License Renewal, Nuclear Regulatory Commission, Washington, DC, 1991.

NUREG-1927, Standard Review Plan for Renewal of Spent Fuel Dry Cask Storage System Licenses and Certificates of Compliance, Rev. 1, Nuclear Regulatory Commission, Washington, DC, March 2011.

Pennington, C., NAC's MAGNASTOR System Licensing Objectives: A Framework for Improved Solutions with Safety and Efficiency, presented at NEI Dry Storage Forum, May 10, 2005.

Surry Independent Spent Fuel Storage Installation, Appendix A, Technical Specifications for Safety, Docket No. 72-2, Renewed Materials License No. SNM-2501, ML050600021, Nuclear Regulatory Commission, Washington, DC, February 25, 2005.

Table V.4.A1 NAC Storage Cask Technology: Storage Overpack (NAC-MPC, NAC-UMS, and MAGNASTOR)

Item	Structure and/or Component[1]	Intended Function[2]	Material	Environment	Aging Effect/ Mechanism	Aging Management Program (AMP)	Program Type
V.4.A1-1	Storage overpack (accessible areas): Steel inner liner, base, shield plug, lid, air ducts, screens, gamma shield cross plates, lifting lugs and trunnions (A or B)	SS, HT, RS, FR	Carbon or low-alloy steel	Air – inside the overpack; Air – outdoor, marine environment (if applicable)	Loss of material due to general corrosion, pitting, crevice corrosion	IV.M1,"External Surfaces Monitoring of Mechanical Components"	Generic program
V.4.A1-2	Storage overpack (accessible areas): Overpack concrete radiation shield, pedestal shield, and overpack lid shield (A)	RS, SS	Reinforced or plain concrete	Air – outdoor, marine environment (if applicable) (external)	Cracking due to expansion from reaction with aggregates; Increase in porosity/permeability, cracking, or loss of material (spalling, scaling) due to aggressive chemical attack; Loss of material (spalling, scaling) and cracking due to freeze-thaw; Cracking, loss of bond, and loss of material (spalling, scaling) due to corrosion of embedded steel; Increase in porosity and permeability, or loss of strength due to leaching of calcium hydroxide and carbonation; Loss of strength due to concrete interaction with aluminum	IV.S1, "Concrete Structures Monitoring Program" Note: Further evaluation may be required for the following aging effects/mechanisms: • Loss of material (spalling, scaling) and cracking due to freeze-thaw; • Cracking due to expansion from reaction with aggregates; • Loss of strength due to concrete interaction with aluminum; • Reduction of strength and degradation of shielding performance of concrete due to elevated temperature (>150°F general, >200°F local) and long-term exposure to gamma radiation. (See line items V.4.A-3 to -6 for details)	Generic program

Table V.4.A1 NAC Storage Cask Technology: Storage Overpack (NAC-MPC, NAC-UMS, and MAGNASTOR)

Item	Structure and/or Component[1]	Intended Function[2]	Material	Environment	Aging Effect/ Mechanism	Aging Management Program (AMP)	Program Type
V.4.A1-3	Storage overpack: Overpack concrete radiation shield, pedestal shield, and overpack lid shield (A)	RS, SS	Reinforced or plain concrete	Air – outdoor, marine environment (if applicable) (external)	Loss of material (spalling, scaling) and cracking due to freeze-thaw	Further evaluation is required for facilities that are located in moderate to severe weathering conditions (weathering index >100 day-inch/yr) (NUREG-1557) to determine if a site-specific AMP is needed. A site-specific AMP is not required if documented evidence confirms that the existing concrete had air entrainment content (as per Table CC-2231-2 of the ASME Code, Section III Division 2), and subsequent inspections of accessible areas did not reveal degradation related to freeze-thaw. Such inspections should be considered a part of the evaluation. If this condition is not satisfied, then a site-specific AMP is required to manage loss of material (spalling, scaling) and cracking due to freeze-thaw of concrete in inaccessible areas. The weathering index for the continental United States is shown in ASTM C33-90, Fig. 1.	Further evaluation to determine whether a site-specific AMP is needed
V.4.A1-4	Storage overpack (inaccessible areas): Overpack concrete radiation shield, pedestal shield, and overpack lid shield (A)	RS, SS	Reinforced or plain concrete	Air – outdoor, marine environment (if applicable) (external); For steel liner, radiation and elevated temperature	Cracking due to expansion from reaction with aggregate	Further evaluation is required to determine if a site-specific AMP is needed to manage cracking and expansion due to reaction with aggregate of concrete in inaccessible areas. A site-specific AMP is not required if (1) as described in NUREG-1557, investigations, tests, and petrographic examinations of aggregates performed in accordance with ASTM C295 and other ASTM reactivity tests, as required, can demonstrate that those aggregates do not adversely react within concrete, or (2) for potentially reactive aggregates, aggregate-concrete reaction is not significant.	Further evaluation to determine whether a site-specific AMP is needed

Table V.4.A1 NAC Storage Cask Technology: Storage Overpack (NAC-MPC, NAC-UMS, and MAGNASTOR)

Item	Structure and/or Component[1]	Intended Function[2]	Material	Environment	Aging Effect/ Mechanism	Aging Management Program (AMP)	Program Type
V.4.A1-5	Concrete (inaccessible areas): Overpack concrete radiation shield, pedestal shield, and overpack lid shield (A)	RS, SS, HT	Reinforced or plain concrete	Air – outdoor, (external); For steel liner, radiation and elevated temperature	Loss of strength due to concrete interaction with aluminum	Further evaluation is required to determine if a site-specific AMP is needed to manage loss of strength due to concrete interaction with aluminum in inaccessible areas. This is particularly true when embedded aluminum components without protective coatings are used in combination with steel embedded in concrete (Jana and Tepke 2010).	Further evaluation to determine whether a site-specific AMP is needed
V.4.A1-6	Storage overpack: Overpack concrete radiation shield, pedestal shield, and overpack lid shield (A)	RS, SS	Reinforced or plain concrete	Air – outdoor, marine environment (if applicable) (external); For steel liner, radiation and elevated temperature	Reduction of strength and degradation of shielding performance of concrete due to elevated temperature (>150°F general, >200°F local) and long-term exposure to gamma radiation	The compressive strength and shielding performance of plain concrete is maintained by ensuring that the minimum concrete density is achieved during construction and the allowable concrete temperature and radiation limits are not exceeded. The implementation of 10 CFR 72 requirements and ASME Section XI, Subsection IWL, would not enable identification of the reduction of strength due to elevated temperature and gamma radiation. Thus, for any portions of concrete that exceed specified limits for temperature and gamma radiation, further evaluations are warranted. For normal operation or requested period of extended operation, Subsection CC-3400 of ASME Section III, Division 2, specifies that the concrete temperature limits shall not exceed 66°C (150°F) except for local areas, such as around penetrations, which are not allowed to exceed 93°C (200°F). Also, a gamma radiation dose of 10^{10} rads may cause significant reduction of strength. If significant equipment loads are supported by concrete exposed to temperatures exceeding 66°C (150°F) and/or gamma dose above 10^{10} rads, an evaluation is to be made of the ability to withstand the postulated design loads. Higher temperatures than given above may be allowed in the concrete if tests and/or calculations are provided to evaluate the reduction in strength and modulus of elasticity and these reductions are applied to the design calculations.	Further evaluation to determine whether a site-specific AMP is needed

Table V.4.A1 NAC Storage Cask Technology: Storage Overpack (NAC-MPC, NAC-UMS, and MAGNASTOR)

Item	Structure and/or Component[1]	Intended Function[2]	Material	Environment	Aging Effect/ Mechanism	Aging Management Program (AMP)	Program Type
V.4.A1-7	Ventilation air openings: Air ducts, screens, gamma shield cross plates (A)	HT	Carbon or low-alloy steel	Air – inside the overpack, uncontrolled; or Air – outdoor	Reduced heat convection capacity due to blockage	IV.M2, "Ventilation Surveillance Program."	Generic program
V.4.A1-8	Anchor studs (for anchored cask) (A)	SS	SA-193, SA-354, SA-479, SA-540, SA-564, SA-574, SA-638	Air – outdoor, marine environment (if applicable)	Loss of preload due to self loosening; loss of material due to corrosion; cracking due to stress corrosion cracking	IV.M1, "External Surfaces Monitoring of Mechanical Components"	Generic program
V.4.A1-9	Anchor studs (for anchored cask) (A)	SS	SA-193, SA-354, SA-479, SA-540, SA-564, SA-574, SA-638	Air – outdoor	Cumulative fatigue damage due to cyclic loading	Fatigue is a time-limited aging analysis (TLAA) to be evaluated for the requested period of extended operation. See III.2, "Fatigue of Metal and Concrete Structures and Components," for acceptable methods for meeting the acceptance criteria in Section 3.5.1 of NUREG-1927.	TLAA
V.4.A1-10	Moisture barriers (caulking, sealants, and expansion joint fillers) (C)	SS Not important to safety (ITS)	Elastomers, rubber and other similar materials	Air – outdoor	Loss of sealing due to wear, damage, erosion, tear, surface cracks, or other defects	IV.M1, "External Surfaces Monitoring of Mechanical Components"	Generic program
V.4.A1-11	Coatings (if applied) on metallic components (C)	SS Not ITS	Coating	Air – inside the overpack, uncontrolled, or Air – outdoor	Loss of coating integrity due to blistering, cracking, flaking, peeling, or physical damage	IV.S2, "Protective Coating Monitoring and Maintenance Program"	Generic program

Table V.4.A1 NAC Storage Cask Technology: Storage Overpack (NAC-MPC, NAC-UMS, and MAGNASTOR)

Item	Structure and/or Component[1]	Intended Function[2]	Material	Environment	Aging Effect/ Mechanism	Aging Management Program (AMP)	Program Type
V.4.A1-12	Lightning protection system (C)	SS Not ITS	Various materials	Air – outdoor	Loss of lightning protection due to wear, tear, damage, surface cracks, or other defects	IV.M1, "External Surfaces Monitoring of Mechanical Components"	Generic program
V.4.A1-13	Overpack neutron shielding (A)	RS	Boron carbide in various matrices	Radiation and elevated temperature	Degradation of shielding properties due to long-term exposure to high temperature and radiation	Degradation of radiation-shielding materials is a TLAA to be evaluated for the requested period of extended operation. See III.5, "Time-Dependent Degradation of Radiation-Shielding Materials," for acceptable methods for meeting the acceptance criteria in Section 3.5.1 of NUREG-1927.	TLAA
V.4.A1-14	Cathodic Protection Systems (B)	Cathodic protection of rein-forcing steel	Various materials	Air – outdoor; Embedded in concrete	Reduction of cathodic protection effect on bond strength due to degradation of cathodic protection current	IV.S1, "Concrete Structures Monitoring Program"	Generic program

1. The structures and/or components are classified according to importance to safety, as follows: A = critical to safety operation, B = major impact on safety, and C = minor impact on safety.
2. The important to safety (ITS) functions of the structures and components are as follows: CB = confinement boundary, CC = criticality control, RS = radiation shielding, HT = heat transfer, SS = structural support, and FR = fuel retrievability.

Table V.4.A2 NAC Storage Cask Technology: Storage Cask NAC-I28 S/T

Item	Structure and/or Component[1]	Intended Function[2]	Material	Environment	Aging Effect/ Mechanism	Aging Management Program (AMP)	Program Type
V.4.A2-1	Storage cask (accessible areas): Environmental cover and bolting, cask body top and bottom, radial neutron shield cover, test port cover and bolts, trunnions (A)	SS, HT, RS, FR	Austenitic stainless steel	Air – outdoor, marine environment (if applicable)	Loss of material due to general corrosion, pitting, crevice corrosion	IV.M1, "External Surfaces Monitoring of Mechanical Components"	Generic program
V.4.A2-2	Cask components under environmental cover: Cask lid neutron shield, cask lid, lid bolts, vent and drain port covers and bolts (A)	CB , RS, HT, SS	Austenitic stainless steel;	Air – enclosed space, uncontrolled	Loss of material due to corrosion	IV.M1, "External Surfaces Monitoring of Mechanical Components"	Generic program
V.4.A2-3	Top lid neutron shield (A)	RS	NS-4-FR (encased in stainless steel)	Radiation and elevated temperature in air environment	Degradation of shielding properties due to exposure to high temperature and gamma and neutron radiation	Degradation of neutron-absorbing materials is a TLAA to be evaluated for the requested period of extended operation. See III.5, "Time-Dependent Degradation of Radiation Shielding Materials," for acceptable methods for meeting the acceptance criteria in Section 3.5.1 of NUREG-1927.	TLAA
V.4.A2-4	Radial neutron shield (A)	RS	NS-4-FR (encased in stainless steel)	Radiation and elevated temperature in air environment	Degradation of shielding material due to radiation exposure	Degradation of radiation-shielding materials is a TLAA to be evaluated for the requested period of extended operation. See III.5, "Time-Dependent Degradation of Radiation-Shielding Materials," for acceptable methods for meeting the acceptance criteria in Section 3.5.1 of NUREG-1927.	TLAA
V.4.A2-5	Top closure lid bolting (A)	SS	Stainless steel	Air – enclosed space, uncontrolled	Cumulative fatigue damage/fatigue	Fatigue is a TLAA to be evaluated for the requested period of extended operation. See III.2, "Fatigue of Metal and Concrete Structures and Components," for acceptable methods for meeting the acceptance criteria in Section 3.5.1 of NUREG-1927.	TLAA

Table V.4.A2 NAC Storage Cask Technology: Storage Cask NAC-I28 S/T

Item	Structure and/or Component[1]	Intended Function[2]	Material	Environment	Aging Effect/ Mechanism	Aging Management Program (AMP)	Program Type
V.4.A2-6	Anchor studs (for anchored cask) (A)	SS	SA-193, SA-354, SA-479, SA-540, SA-564, SA-574, SA-638	Air – outdoor, marine environment (if applicable)	Loss of preload due to self-loosening; loss of material due to corrosion; cracking due to stress corrosion cracking	IV.M1, "External Surfaces Monitoring of Mechanical Components"	Generic program
V.4.A2-7	Anchor studs (for anchored cask) (A)	SS	SA-193, SA-354, SA-479, SA-540, SA-564, SA-574, SA-638	Air – outdoor	Cumulative fatigue damage due to cyclic loading	Fatigue is a TLAA to be evaluated for the requested period of extended operation. See III.2, "Fatigue of Metal and Concrete Structures and Components," for acceptable methods for meeting the acceptance criteria in Section 3.5.1 of NUREG-1927.	TLAA
V.4.A2-8	Moisture barriers (caulking, sealants, and expansion joint fillers) (C)	SS Not ITS	Elastomers, rubber and other similar materials	Air – outdoor	Loss of sealing due to wear, damage, erosion, tear, surface cracks, or other defects	IV.M1, "External Surfaces Monitoring of Mechanical Components"	Generic program
V.4.A2-9	Coatings (if applied) on metallic components (C)	SS Not ITS	Coating	Air – inside the overpack, uncontrolled, or Air – outdoor	Loss of coating integrity due to blistering, cracking, flaking, peeling, or physical damage	IV.S2, "Protective Coating Monitoring and Maintenance Program"	Generic program
V.4.A2-10	Pressure monitoring system: Pressure sensor inner and outer housing and associated elastomer seals and bolts. (B)	Monitoring system	Steel, elasto-mers, rubber and similar materials	Air – enclosed space, uncontrolled; or Air - outdoor	Loss of material due to general, pitting, and crevice corrosion	IV.M1, "External Surfaces Monitoring of Mechanical Components"	Generic program

Table V.4.A2 NAC Storage Cask Technology: Storage Cask NAC-I28 S/T

Item	Structure and/or Component[1]	Intended Function[2]	Material	Environment	Aging Effect/ Mechanism	Aging Management Program (AMP)	Program Type
V.4.A2-11	Lightning protection system (C)	SS Not ITS	Various materials	Air – outdoor	Loss of lightning protection due to wear, tear, damage, surface cracks, or other defects	IV.M1, "External Surfaces Monitoring of Mechanical Components"	Generic program

1 The structures and/or components are classified according to importance to safety, as follows: A = critical to safety operation, B = major impact on safety, and C = minor impact on safety.
2 The important to safety (ITS) functions of the structures and components are as follows: CB = confinement boundary, CC = criticality control, RS = radiation shielding, HT = heat transfer, SS = structural support, and FR = fuel retrievability.

Table V.4.B1 NAC Storage Cask Technology: Multi-Purpose Canister (MPC) for NAC-MPC, NAC-UMS, and MAGNASTOR

Item	Structure and/or Component[1]	Intended Function[2]	Material	Environment	Aging Effect/ Mechanism	Aging Management Program (AMP)	Program Type
V.4.B1-1	Confinement vessel: Baseplate, shell, shield lid, lid bolting (NAC-I28), port cover, closure ring, bottom plate, and associated welds (A)	CB, CC, HT, SS, FR	Stainless steel	Air – inside the overpack, uncontrolled (external); or Helium (internal)	Cumulative fatigue damage due to cyclic loading	Fatigue is a TLAA to be evaluated for the requested period of extended operation. See III.2, "Fatigue of Metal and Concrete Structures and Components," for acceptable methods for meeting the acceptance criteria in Section 3.5.1 of NUREG-1927.	TLAA
V.4.B1-2	Confinement vessel: Baseplate, shell, shield lid, port cover, closure ring, bottom plate, and associated welds. (A)	CB, CC, HT, SS, FR	Stainless steel	Air – inside the overpack, uncontrolled (external)	Cracking and leakage due to stress corrosion cracking when exposed to moisture and aggressive chemicals in the environment	IV.M1, "External Surfaces Monitoring of Mechanical Components" IV.M3, "Welded Canister Seal and Leakage Monitoring Program"	Generic program
V.4.B1-3	Confinement vessel internal components: Fuel basket, fuel spacer, basket support; heat conduction elements; drain pipe, vent port; neutron absorber panels (A)	CC, CB, HT, SS, FR	Stainless steel, aluminum alloy, BORAL, borated aluminum or boron carbide/-aluminum alloy plate	Helium, radiation, and elevated temperatures	Degradation of heat transfer, criticality control, radiation shield, or structural support functions of the confinement vessel internals due to extended exposure to high temperature and radiation.	IV.M5, "Canister/Cask Internals Structural and Functional Integrity Monitoring Program" Degradation of neutron-absorbing materials is a TLAA to be evaluated for the requested period of extended operation. See III.4, "Time-Dependent Degradation of Neutron-Absorbing Materials," for acceptable methods for meeting the acceptance criteria in Section 3.5.1 of NUREG-1927.	Generic program TLAA

1. The structures and/or components are classified according to importance to safety, as follows: A = critical to safety operation, B = major impact on safety, and C = minor impact on safety.
2. The important to safety (ITS) functions of the structures and components are as follows: CB = confinement boundary, CC = criticality control, RS = radiation shielding, HT = heat transfer, SS = structural support, and FR = fuel retrievability.

Table V.4.B2 NAC Storage Cask Technology: Internal Contents of the Confinement Vessel of NAC-I28 Storage Cask

Item	Structure and/or Component	Intended Function	Material	Environment	Aging Effect/ Mechanism	Aging Management Program (AMP)	Program Type
V.4.B2-1	Vent and drain cover plates and bolting: (A)	CB, SS, RS, HT	Stainless Steel, low-alloy steel	Air – enclosed space, uncontrolled (external); or Helium (internal)	Cumulative fatigue damage/fatigue	Fatigue is a TLAA to be evaluated for the requested period of extended operation. See III.2, "Fatigue of Metal and Concrete Structures and Components," for acceptable methods for meeting the acceptance criteria in Section 3.5.1 of NUREG-1927.	TLAA
V.4.B2-2	Vent and drain cover plates and bolting (access requires removal of environmental cover and lid neuron shield): (A)	CB, SS, HT	Stainless Steel, low-alloy steel	Air – enclosed space, uncontrolled (external); or Helium (internal)	Loss of material due to corrosion	IV.M1, "External Surface Monitoring of Metal Components" Further evaluation is required to determine if periodic inspection is needed to manage loss of material due to corrosion for these components.	Generic program
V.4.B2-3	Metallic Seals: Lid, drain, and vent port closures (A)	CB	Stainless steel with silver plating	Air – enclosed space, uncontrolled (external); or Helium (internal)	Loss of sealing forces due to stress relaxation and creep of the metallic O-rings, corrosion and loss of preload of the closure bolts	IV.M4, "Bolted Cask Seal and Leakage Monitoring Program"	Generic program
V.4.B2-4	Confinement vessel internal components Fuel basket, top and bottom fittings, aluminum and stainless steel plates, neutron absorber plates, stainless steel plugs, basket rails, drain pipe (A)	CC, SS, HT, RS, FR	Stainless steel, aluminum, and borated aluminum	Helium, radiation, and elevated temperatures	Degradation of heat transfer, criticality control, radiation shield, or structural support function due to extended exposure to high temperature and radiation	IV.M5, "Canister/Cask Internals Structural and Functional Integrity Monitoring Program" Degradation of neutron-absorbing materials is a TLAA to be evaluated for the requested period of extended operation. See III.4, "Time-Dependent Degradation of Neutron-Absorbing Materials," for acceptable methods for meeting the acceptance criteria in Section 3.5.1 of NUREG-1927.	Generic program TLAA

1 The structures and/or components are classified according to importance to safety, as follows: A = critical to safety operation, B = major impact on safety, and C = minor impact on safety.
2 The important to safety (ITS) functions of the structures and components are as follows: CB = confinement boundary, CC = criticality control, RS = radiation shielding, HT = heat transfer, SS = structural support, and FR = fuel retrievability.

Table V.4.C NAC Storage Cask Technology: Basemat (Pad) and Approach Slab (Ramp)

Item	Structure and/or Component[1]	Intended Function[2]	Material	Environment	Aging Effect/ Mechanism	Aging Management Program (AMP)	Program Type
V.4.C-1	Concrete: Basemat (pad) and approach slab (ramp) (above-grade) (B)	SS	Reinforced concrete	Air – outdoor	Cracking due to expansion from reaction with aggregates; Increase in porosity/permeability, cracking, or loss of material (spalling, scaling) due to aggressive chemical attack; Cracking and loss of material (spalling, scaling) due to freeze-thaw; Cracking, loss of bond, and loss of material (spalling, scaling) due to corrosion of embedded steel; Increase in porosity and permeability and loss of strength due to leaching of calcium hydroxide and carbonation; Cracking and distortion due to increased stress level from settlement.	IV.S1, "Concrete Structures Monitoring Program" Note: Further evaluation may be required to manage all of these aging effects/mechanisms for the below grade or inaccessible areas of the basemat and approach ramp (See line items V.4.C-2 to -7 for details)	Generic program

Table V.4.C NAC Storage Cask Technology: Basemat (Pad) and Approach Slab (Ramp)

Item	Structure and/or Component[1]	Intended Function[2]	Material	Environment	Aging Effect/ Mechanism	Aging Management Program (AMP)	Program Type
V.4.C-2	Concrete: Basemat (pad) and approach slab (ramp) (below-grade) (B)	SS	Reinforced concrete	Groundwater/ soil	Cracking; loss of bond; and loss of material (spalling, scaling) due to corrosion of embedded steel	For facilities with non-aggressive groundwater/soil, i.e., pH >5.5, chlorides <500 ppm, and sulfates <1500 ppm, as a minimum, consider (1) examination of the exposed portions of the below-grade concrete, when excavated for any reason, and (2) periodic monitoring of below-grade water chemistry, including consideration of potential seasonal variations. For facilities with aggressive groundwater/soil (i.e., pH <5.5, chlorides >500 ppm, or sulfates >1500 ppm), and/or where the concrete structural elements have experienced degradation, a site-specific AMP accounting for the extent of the degradation experienced should be implemented to manage the concrete aging during the period of extended operation.	Further evaluation to determine whether a site-specific AMP is needed
V.4.C-3	Concrete: Basemat (pad) and approach slab (ramp) (below-grade) (B)	SS	Reinforced concrete	Groundwater/ soil	Cracking due to expansion from reaction with aggregates	Further evaluation is required to determine if a site-specific AMP is needed to manage cracking and expansion due to reaction with aggregate of concrete in inaccessible areas. A site-specific AMP is not required if (1) as described in NUREG-1557, investigations, tests, and petrographic examinations of aggregates per ASTM C295 and other ASTM reactivity tests, as required, can demonstrate that those aggregates do not adversely react within concrete, or (2) for potentially reactive aggregates, it is demonstrated that the in-place concrete can perform its intended function.	Further evaluation to determine whether a site-specific AMP is needed

Table V.4.C NAC Storage Cask Technology: Basemat (Pad) and Approach Slab (Ramp)

Item	Structure and/or Component[1]	Intended Function[2]	Material	Environment	Aging Effect/ Mechanism	Aging Management Program (AMP)	Program Type
V.4.C-4	Concrete: Basemat (pad) and approach slab (ramp) (below-grade) (B)	SS	Reinforced concrete	Groundwater/ soil	Loss of material (spalling, scaling) and cracking due to freeze-thaw	Further evaluation is required for facilities that are located in moderate to severe weathering conditions (weathering index >100 day-inch/yr) (NUREG-1557) to determine if a site-specific AMP is needed. A site-specific AMP is not required if documented evidence confirms that the existing concrete had air entrainment content (as per Table CC-2231-2 of the ASME Code, Section III Division 2), and subsequent inspections of accessible areas did not exhibit degradation related to freeze-thaw. Such inspections should be considered a part of the evaluation. If this condition is not satisfied, then a site-specific AMP is required to manage loss of material (spalling, scaling) and cracking due to freeze-thaw of concrete in inaccessible areas. The weathering index for the continental United States. is shown in ASTM C33-90, Fig. 1.	Further evaluation to determine whether a site-specific AMP is needed
V.4.C-5	Concrete (inaccessible areas): Basemat (pad) and approach slab (ramp) (B)	SS	Reinforced concrete	Groundwater/ soil	Increase in porosity and permeability; cracking; loss of material (spalling, scaling) due to aggressive chemical attack	For facilities with non-aggressive groundwater/soil, i.e., pH >5.5, chlorides <500 ppm, and sulfates <1500 ppm, as a minimum, consider (1) examination of the exposed portions of the below-grade concrete, when excavated for any reason, and (2) periodic monitoring of below-grade water chemistry, including consideration of potential seasonal variations. For facilities with aggressive groundwater/soil (i.e., pH <5.5, chlorides >500 ppm, or sulfates >1500 ppm), and/or where the concrete structural elements have experienced degradation, a site-specific AMP accounting for the extent of the degradation experienced should be implemented to manage the concrete aging during the requested period of extended operation.	Further evaluation to determine whether a site-specific AMP is needed

Table V.4.C NAC Storage Cask Technology: Basemat (Pad) and Approach Slab (Ramp)

Item	Structure and/or Component[1]	Intended Function[2]	Material	Environment	Aging Effect/ Mechanism	Aging Management Program (AMP)	Program Type
V.4.C-6	Concrete (inaccessible areas): Exterior below-grade; basemat (concrete pad) and approach slab (ramp) (B)	SS	Reinforced concrete	Groundwater/ soil	Increase in porosity and permeability; loss of strength due to leaching of calcium hydroxide and carbonation	Further evaluation is required to determine if a site-specific AMP is needed to manage increase in porosity and permeability due to leaching of calcium hydroxide and carbonation of concrete in inaccessible areas. A site-specific AMP is not required if (1) there is evidence in the accessible areas that the flowing water has not caused leaching and carbonation, or (2) evaluation determined that the observed leaching of calcium hydroxide and carbonation in accessible areas has no impact on the intended function of the concrete structure.	Further evaluation to determine whether a site-specific AMP is needed
V.4.C-7	Concrete: Basemat (pad) and approach slab (ramp) (B)	SS	Reinforced concrete	Air – outdoor; Groundwater/ soil	Reduction of strength, cracking due to differential settlement, and erosion of porous concrete sub-foundation	Further evaluation is required to determine if a site-specific AMP is needed, if a de-watering or any other system is relied upon for control of settlement, to ensure proper functioning of that system through the requested period of extended operation.	Further evaluation to determine whether a site-specific AMP is needed

1. The structures and/or components are classified according to importance to safety, as follows: A = critical to safety operation, B = major impact on safety, and C = minor impact on safety.
2. The important to safety (ITS) functions of the structures and components are as follows: CB = confinement boundary, CC = criticality control, RS = radiation shielding, HT = heat transfer, SS = structural support, and FR = fuel retrievability.

V.5 Ventilated Storage Cask System VSC-24

V.5.1 System Description

The Ventilated Storage Cask (VSC) System is a canister-based dry cask storage system (DCSS) that consists of a concrete storage overpack and a steel, seal-welded canister to store the used nuclear fuels. The VSC System can be sized to hold from 4 to 24 PWR assemblies. A VSC-24 system holds 24 PWR assemblies. The VSC System has been designed and analyzed for a lifetime of 50 years.

The VSC-24 System was approved under 10 CFR 72 (Docket 72-1007) in May 1993. A 40-year Certificate of Compliance (CoC) renewal application for the VSC-24 System has been submitted by the vendor, EnergySolutions, to extend the CoC expiration date to May 2053. Currently, there are fifty-eight (58) VSC-24 casks that were loaded and put into storage at three different ISFSIs between May 1993 and June 2003 (18 casks at Palisades, 16 casks at Point Beach, and 24 casks at ANO). The used fuels stored in the VSC-24 casks have low heat loads and low burnup. The maximum initial heat load of the 58 loaded VSC-24 casks is less than 15 kW. The highest burnup of all used-fuel assemblies in the 58 loaded VSC-24 casks is less than 42 GWd/MTU. Figure V.5-1 shows the major system components of the VSC-24 System (EPRI 1021048).

The major VSC-24 system components consist of

- Multi-Assembly Sealed Basket (MSB)
- Ventilated Concrete Cask (VCC)
- Concrete Pad

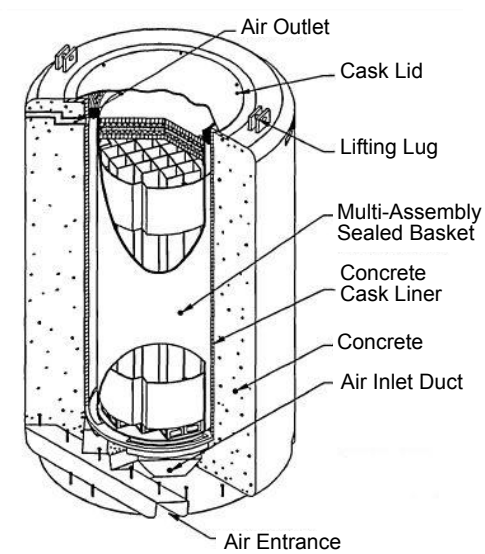

Figure V.5-1: VSC-24 system components (LAR 1007-006, Rev. 0, 2005).

The MSB is a sealed cylindrical canister containing a basket structure used to support fuel assemblies. The MSB is stored in the central cavity of the VCC. The VCC employs carbon steel-lined air ducts to facilitate natural air circulation, which removes decay heat from the MSB exterior surface. The metal surfaces of VSC-24 cask system components are coated with industry standard

coatings, such as Carbo-Zinc, Dimetcote 6, or the equivalent, for preventing corrosion of the metal components. The major system components are described below.

V.5.1.1 Multi-Assembly Sealed Basket (MSB)

The MSB, located in the VCC internal cavity, consists of an outer MSB shell assembly, a shielding lid, a structural lid, and the fuel basket assembly, as shown in Figure V.5-1. The MSB is designed to be free to undergo thermal expansion or contraction relative to the VCC.

MSB Shell: The 25-mm (1-in.)-thick MSB shell is fabricated from SA-516 Gr. 70 pressure vessel steel with a diameter of 1.59 m (62.5 in.). The length depends on fuel type, with or without control elements, and varies from 4.17 to 4.88 m (164.2 to 192.25 in.). The MSB bottom plate is a 19.1-mm (0.75-in.)-thick plate that is welded to the shell in the fabrication shop. The MSB sits on ceramic tiles that prevent contact with the VCC bottom plate, to prevent galvanic reactions and potential contamination of the VCC bottom plate.

The MSB shell and the internals are coated to prevent detrimental effects from the fuel-pool water chemistry. The exterior of the MSB shell is also coated to prevent corrosion.

The MSB shield lid and structural lid thicknesses are 241 mm and 76 mm (9.5 in. and 3 in.), respectively. Both lids are welded to the MSB shell after fuel loading. The MSB is lifted from above via six hoist rings that are bolted to the MSB structural lid.

Shield Lid: The 241-mm (9.5-in.)-thick MSB shield lid consists of one 64-mm (2.5-in.) steel plate, one 51-mm (2.0-in.) RX-277 neutron shield layer and one 127-mm (5.0-in.) steel plate. The shield lid is placed in the shielding support ring, which is welded to the MSB shell by 12.7-mm (0.5-in.) partial-penetration welds. The shield lid is welded to the MSB shell after the fuel is inserted with a 6.4-mm (0.25-in.) partial-penetration weld. Two penetrations for draining, vacuum drying, and backfilling with helium are also located in the shield lid.

A guide tube is screwed into a threaded hole on the backside of the draining penetration. The tube reaches to within 1.59 mm (1/16 in.) of the MSB bottom to facilitate removal of the water from the MSB after fuel loading. After fuel is loaded into the MSB, the MSB is seal welded, dried, backfilled with helium, and structurally welded.

Structural Lid: The MSB structural lid is a 76-mm (3-in.)-thick steel disk that has a penetration for access to the fittings in the shield lid. This penetration is sealed via multiple welds once the helium backfill process has been completed. The structural lid is welded to the MSB shell after the fuel is inserted and provides a redundant seal for confinement.

MSB Internal Fuel Basket: The MSB fuel basket (sleeve basket) is a welded assembly that consists of 24 welded 234-mm (9.2-in.)-square structural tubes, each with a thickness of 5.1 mm (0.20 in.).

Structural support in the horizontal direction is provided by the curved horizontal support assemblies located at each end and at the center of the basket assembly. The support assembly consists of outer support bar, outer radial support plate, and outer support wall.

All material is SA-516 Gr. 70 or equivalent. A coating is applied to the interior basket to protect it against the fuel-pool chemistry.

V.5.1.2 Ventilated Concrete Cask (VCC)

The VCC is a cylindrical annulus of reinforced concrete with an outside diameter of 3.35 m (132 in.) and an overall height that varies from 5.00 to 5.72 m (196.7 to 225.1 in.). The VCC has 0.74 m (29 in.) of concrete in the radial direction and 0.46 m (18 in.) of concrete at the bottom for shielding. The concrete of the VCC is Type II Portland Cement.

The internal cavity of the VCC has a diameter of 1.79 m (70.5 in.), with a 44.5-mm (1.75-in.)-thick steel liner. The MSB is stored in the central cavity of the VCC. The VCC provides structural support, shielding, and natural convection cooling for the MSB. The natural convection is provided through the 102-mm (4-in.)-wide annulus between the VCC steel liner and the MSB.

The VCC is provided with a 19.1-mm (0.75-in.)-thick carbon steel cask cover plate that provides shielding and weather cover to protect the MSB from the environment and postulated tornado missiles. The cask cover plate is bolted in place. The bottom of the VCC has a 6.4-mm (0.25-in.)-thick steel plate that covers the entire bottom and prevents any loss of material during a bottom drop accident.

The concrete VCC has chamfered edges in order to mitigate potential damage due to a cask drop. The chamfered edges eliminate the sharp corners at the cask top and bottom, where chipping, spalling, and loss of material predominately occur in a drop accident. The chamfered edges are reinforced to spread the load throughout a larger section of the cask for minimizing concrete material loss during a drop accident.

The VCC is lifted from below via a hydraulic roller skid inserted in the skid access channels.

Inlet and Outlet Air Ducts: The natural-circulation air flow path is formed by air entrance, air inlet ducts at the bottom of the VCC, the gap between the MSB and the VCC steel liner, and the air outlet ducts at the top of the cask. Each air duct is 1.22 m (48 in.) wide and is lined on all sides with 12.7-mm (0.5-in.) carbon steel to facilitate natural air circulation. There are four air inlet ducts placed 90° apart around the cask circumference. A 152-mm (6.0-in.)-thick steel ring is placed at the top of the duct to provide protection from radiation streaming up the ventilation duct. Screens are provided for each duct for preventing airflow blockage due to blowing debris, snow, or animals.

Confinement: The confinement of the VSC consists of multi-pass seal welds at five locations:

1. MSB shell bottom to end plate,
2. MSB shield lid to shell,
3. MSB structural lid to shell,
4. MSB draining, drying and backfilling penetration port to shield lid, and
5. MSB drain and vent cover plates to structural lid.

The MSB welds are helium leak checked to ensure helium leakage of less than 10^{-4} atm-cc/sec and repaired, if necessary, in accordance with the facility technical specification. The MSB pressure boundary shield lid, structural lid, and valve cover plate closure welds are liquid-penetrant tested.

Shielding: The shielding materials used in the VSC-24 cask system include carbon steel and RX-277 neutron shielding material in the MSB and carbon steel and concrete in the VCC.

MSB radial shielding is provided by the 25.4-mm (1-in.)-thick carbon steel MSB shell, the 44.5-mm (1.75-in.)-thick carbon steel VCC liner, and 0.74 m (29 in.) of VCC concrete.

MSB bottom shielding is provided by the 19.1-mm (0.75-in.)-thick carbon steel MSB bottom plate, 0.46 m (18 in.) of VCC concrete, and the 51-mm (2 in.)-thick carbon steel VCC bottom plate.

MSB top shielding is provided by the 214-mm (9.5-in.)-thick carbon steel shield lid (containing 191 mm (7.5 in.) of carbon steel plate and 51 mm (2.0 in.) of RX-277 neutron shielding material), the 76-mm (3.0-in.)-thick carbon steel structural lid, and the 19.1-mm (0.75-in.)-thick carbon steel VCC cover lid.

All of the cask lids are carbon steel. The RX-277 in the MSB shield lid is baked to remove unbound moisture present in the material, which prevents off gassing within the shield lid neutron shield cavity during fuel storage.

The VSC concrete pad consists of three major sections: the truck/trailer loading area, the cask construction area, and the cask storage area. Casks are placed in the vertical position on the pad in linear arrays as defined by the owner utility. Actual array sizes could range from 20 to more than 200 total casks. Plant technical specifications require a 4.6-m (15-ft) center-to-center distance between two casks.

V.5.2 Codes and Service Life

The MSB is designed to meet material and stress requirements of ASME Code Section III, Division 1. The VCC is designed to meet load combinations in ACI 349-85 and the American Nuclear Society ANS-57.9. The VSC cask is designed to withstand the design basis daily and seasonal temperature fluctuations, and tornado, wind, flood, seismic events, snow, and ice loads.

The cask is designed to withstand normal, off-normal, and accident loads. The accident loads include full blockage of air inlets, maximum heat load, MSB drop accident, tornado (wind and missiles), flood, and earthquake. The VSC is designed to withstand a maximum horizontal ground acceleration of 0.25 g and a maximum vertical ground acceleration of 0.17 g, in accordance with 10 CFR Part 72, 72.102 (a) requirements appropriate for the majority of sites east of the Rocky Mountains. Site-specific analyses are necessary for sites whose design basis earthquake is larger than 0.25 g.

V.5.3 Existing Inspection and Monitoring Program

The following surveillance activities are required in the facility Technical Specification:

1. Daily visual inspection of all the VCC inlet and outlet ducts and screens to detect blockage of screens and screen damage or degradation. The corrective actions include the following: remove blockage and/or repair or replace damaged or degraded screens. If a screen is breached, inspect the duct for blockage.

2. Annual visual inspection of the VCC exterior concrete surfaces for any damage or degradation (chipping, spalling, cracks, loss of bond, loss of material, and increased porosity and discoloration such as efflorescence) by qualified concrete inspectors, for preventing degradation of the concrete interior and avoiding any adverse impact on shielding performance.

3. Inspection of the VCC interior surfaces and MSB exterior surfaces every five years for the first VSC unit placed in service at each site, to identify potential air flow blockage and material degradation mechanisms affecting system performance.

In addition to the existing surveillance activities as mentioned above, the VSC-24 renewal application (VSC-24 CoC LRA 2013) added the following surveillance activities during the requested period of extended operation for the VSC-24 casks:

1. Examination of VSC Top End Steel Components: Visual examination of all the accessible VSC top end steel components is performed by qualified steel inspectors to detect degradation of coated surfaces. The sample size is one (1) cask at each site. The inspection interval is 10 years. The components include VCC lid, lid gasket, lid bolts, liner flange and shield rings and MSB top end components (e.g., lid, closure welds). No significant coating loss or corrosion is allowed for the inspected components. Degraded coating will be repaired.

2. Lead cask inspection: The lead cask inspection is performed at the end of the initial 20-year storage period and at 20-year intervals during the requested period of extended operation. The scope of the lead cask inspection includes visual examination of the normally inaccessible VCC bottom surface, remote visual examination of the VCC annulus (i.e., VCC liner and MSB shell), inlet air ducts, and outlet air ducts, and visual examination of the VCC cask lid, MSB structural lid and closure weld. The VSC-24 lead casks are selected for inspection based on a number of parameters that contribute to degradation, such as design configuration, environmental conditions, time in service, and total heat load of the used fuels stored in the MSB. The sample size is one or more casks at one or more sites.

The TLAAs and AMPs to manage aging effects for specific structures and components, materials of construction, and environments of the VSC-24 spent-fuel storage cask are given in Tables V.5.A, V.5.B and V.5.C. In these tables, the DCSS components listed in the Structure and/or Component column are classified as “A”, “B”, or “C” according to importance to safety, as described in Section I.2.

V.5.4 References

10 CFR Part 72, Licensing Requirements for the Independent Storage of Spent Nuclear Fuel, High-Level Radioactive Waste, and Reactor-Related Greater than Class C Waste, Nuclear Regulatory Commission, 1-1-12 Edition, 2012.

10 CFR 72.102, Geological and Seismological Characteristics for Applications before October 16, 2003 and Applications for other than Dry Cask Modes of Storage, Nuclear Regulatory Commission, 1-1-12 Edition, 2012.

ACI 349-85, Code Requirements for Nuclear Safety Related Concrete Structures, American Concrete Institute, Detroit, MI.

ANS 57.9, Design Criteria for an Independent Spent Fuel Storage Installation (Dry Type), American Nuclear Society, La Grange Park, IL, 1984.

ASME Boiler and Pressure Vessel Code, Section III, Rules for Construction of Nuclear Power Plant Components, Division 1, Subsection NB, Class 1 Components, American Society for Mechanical Engineers, New York, 2004.

ASME Boiler and Pressure Vessel Code, Section III, Rules for Construction of Nuclear Facility Components, Divisions 1 and 2, American Society of Mechanical Engineers, New York, 2004.

ASME Boiler and Pressure Vessel Code, Section XI Subsection IWL, Requirements for Class CC Concrete Components of Light-Water Cooled Plants, American Society of Mechanical Engineers, New York, 2004.

ASTM C295, Standard Guide for Petrographic Examination of Aggregates for Concrete, ASTM International, West Conshohocken, PA, 2008.

ASTM C33-90, Standard Specification for Concrete Aggregates, ASTM International, West Conshohocken, PA, 1990.

Certificate of Compliance for Renewal Application for the VSC-24 Ventilated Storage Cask System (docket Number 72-1007), EnergySolutions Spent Fuel Division, Inc., Campbell, CA, LAR 1007-007 Revision 1, February 14, 2013.

EPRI 1021048, Industry Spent Fuel Storage Handbook, Electric Power Research Institute, Palo Alto, CA, July 2010.

Fillmore, D. L., Literature Review of the Effects of Radiation and Temperature on the Aging of Concrete, INEEL/EXT-04-02319, Sept. 2004.

Jana, D. and Tepke, D., Corrosion of Aluminum Metal in Concrete – A Case Study, Proceedings of the 32nd Conference on Cement Microscopy, ICMA, New Orleans, Louisiana, March, 2010. Retrieved from http://www.cmc-concrete.com/ publication link on February 28, 2013.

LAR 1007-006, Rev. 0, Final Safety Analysis Report for the VSC-24 Ventilated Storage Cask System, BNG Fuel Solutions Corporation, Campbell, CA, June 2005.

NUREG-1557, October 1996, "Summary of Technical Information and Agreements from Nuclear Management and Resource Council Industry Report addressing License Renewal.

NUREG-1927, Rev. 1, Standard Review Plan for Renewal of Spent Fuel Dry Cask Storage System Licenses and Certificates of Compliance, U.S. Nuclear Regulatory Commission, Washington, DC, March 2011.

Table V.5.A VSC-24 Storage Cask: Ventilated Concrete Cask (VCC)

Item	Structure and/or Component[1]	Intended Function[2]	Material	Environment	Aging Effect/ Mechanism	Aging Management Program (AMP)	Program Type
V.5.A-1	VCC overpack (accessible areas): Overpack concrete (A)	RS, SS	Reinforced or plain concrete	Air – outdoor, marine environment (if applicable) (external); For steel liner, radiation and elevated temperature	Cracking due to expansion from reaction with aggregates; Increase in porosity/permeability, cracking, or loss of material (spalling, scaling) due to aggressive chemical attack; Cracking and loss of material (spalling, scaling) due to freeze-thaw; Cracking, loss of bond, and loss of material (spalling, scaling) due to corrosion of embedded steel; Increase in porosity and permeability or loss of strength due to leaching of calcium hydroxide and carbonation; Loss of strength due to concrete interaction with aluminum	IV.S1, "Concrete Structures Monitoring Program" Note: Further evaluation may be required for the following aging effects/mechanisms: • Loss of material (spalling, scaling) and cracking due to freeze-thaw; • Cracking due to expansion from reaction with aggregates; • Loss of strength due to concrete interaction with aluminum; • Reduction of strength and degradation of shielding performance of concrete due to elevated temperature (>150°F general, >200°F local) and long-term exposure to gamma radiation. (See line items V.1.A-2 to -5 for details)	Generic program

Table V.5.A VSC-24 Storage Cask: Ventilated Concrete Cask (VCC)

Item	Structure and/or Component[1]	Intended Function[2]	Material	Environment	Aging Effect/ Mechanism	Aging Management Program (AMP)	Program Type
V.5.A-2	VCC overpack (accessible areas): Overpack concrete (A)	RS, SS	Reinforced or plain concrete	Air – outdoor, marine environment (if applicable) (external); For steel liner, radiation and elevated temperature	Loss of material (spalling, scaling) and cracking due to freeze-thaw	Further evaluation is required for facilities that are located in moderate to severe weathering conditions (weathering index >100 day-inch/yr) (NUREG-1557) to determine if a site-specific AMP is needed. A site-specific AMP is not required if documented evidence confirms that the existing concrete had air entrainment content (as per Table CC-2231-2 of the ASME Code, Section III Division 2), and subsequent inspections of accessible areas did not reveal degradation related to freeze-thaw. Such inspections should be considered a part of the evaluation. If this condition is not satisfied, then a site-specific AMP is required to manage loss of material (spalling, scaling) and cracking due to freeze-thaw of concrete in inaccessible areas. The weathering index for the continental United States is shown in ASTM C33-90, Fig. 1.	Further evaluation, for facilities located in moderate to severe weathering conditions
V.5.A-3	Storage overpack (inaccessible areas): Overpack concrete (A)	RS, SS	Reinforced or plain concrete	Air – outdoor, marine environment (if applicable) (external); For steel liner, radiation and elevated temperature	Cracking due to expansion from reaction with aggregate	Further evaluation is required to determine if a site-specific AMP is needed to manage cracking and expansion due to reaction with aggregate of concrete in inaccessible areas. A site-specific AMP is not required if (1) as described in NUREG-1557, investigations, tests, and petrographic examinations of aggregates performed in accordance with ASTM C295 and other ASTM reactivity tests, as required, can demonstrate that those aggregates do not adversely react within concrete, or (2) for potentially reactive aggregates, aggregate-concrete reaction is not significant.	Further evaluation to determine whether a site-specific AMP is needed

Table V.5.A VSC-24 Storage Cask: Ventilated Concrete Cask (VCC)

Item	Structure and/or Component[1]	Intended Function[2]	Material	Environment	Aging Effect/ Mechanism	Aging Management Program (AMP)	Program Type
V.5.A-4	Concrete (inaccessible areas): Overpack concrete (A)	RS, SS, HT	Reinforced or plain concrete	Air – outdoor, (external); For steel liner, radiation and elevated temperature	Loss of strength due to concrete interaction with aluminum	Further evaluation is required to determine if a site-specific AMP is needed to manage loss of strength due to concrete interaction with aluminum in inaccessible areas. This is particularly true when embedded aluminum components without protective coatings are used in combination with steel embedded in concrete (Jana and Tepke 2010).	Further evaluation to determine whether a site-specific AMP is needed
V.5.A-5	Storage overpack: Overpack concrete (A)	RS, SS	Reinforced or plain concrete	Air – outdoor, marine environment (if applicable) (external); For steel liner, radiation and elevated temperature	Reduction of strength and degradation of shielding performance of concrete due to elevated temperature (>150°F general, >200°F local) and long-term exposure to gamma radiation	The compressive strength and shielding performance of plain concrete is maintained by ensuring that the minimum concrete density is achieved during construction and the allowable concrete temperature and radiation limits are not exceeded. The implementation of 10 CFR 72 requirements and ASME Code Section XI, Subsection IWL, would not enable identification of the reduction of strength due to elevated temperature and gamma radiation. Thus, for any portions of concrete that exceed specified limits for temperature and gamma radiation, further evaluations are warranted. For normal operation or requested period of extended operation, Subsection CC-3400 of ASME Section III, Division 2, specifies that the concrete temperature limits shall not exceed 66°C (150°F) except for local areas, such as around penetrations, which are not allowed to exceed 93°C (200°F). Also, a gamma radiation dose of 10^{10} rads may cause significant reduction of strength (Fillmore 2004). If significant equipment loads are supported by concrete exposed to temperatures exceeding 66°C (150°F) and/or gamma dose above 10^{10} rads, an evaluation is to be made of the ability to withstand the postulated design loads. Higher temperatures than given above may be allowed in the concrete if tests and/or calculations are provided to evaluate the reduction in strength and modulus of elasticity and these reductions are applied to the design calculations.	Further evaluation, if temperature and gamma radiation limits are exceeded

Table V.5.A VSC-24 Storage Cask: Ventilated Concrete Cask (VCC)

Item	Structure and/or Component[1]	Intended Function[2]	Material	Environment	Aging Effect/ Mechanism	Aging Management Program (AMP)	Program Type
V.5.A-6	Moisture barriers (caulking, sealants) (if applied) (C)	SS Not important to safety (ITS)	Elastomers, rubber and other similar materials	Air – outdoor	Loss of sealing due to wear, damage, erosion, tear, surface cracks, or other defects	IV.M1, "External Surfaces Monitoring of Mechanical Components"	Generic program
V.5.A-7	Overpack (accessible areas): Weather cover plate, shielding ring, lifting lugs, skid access channels for lifting, bottom plate (A)	SS, FR, FT, RS	Steel A-36	Outside air or marine environment	General corrosion, pitting, crevice corrosion	IV.M1, "External Surfaces Monitoring of Mechanical Components"	Generic program
V.5.A-8	Overpack (inaccessible areas): Cask liner, cask liner bottom, MSB structural lid (A)	SS, FR, FT, RS	Steel A-36	Outside air or marine environment	General corrosion, pitting, crevice corrosion	Further evaluation is required to establish the extent and frequency of inspection.	Further evaluation to determine whether a sire-specific AMP is needed
V.5.A-9	VCC air ventilation components: Air inlet and outlet channels, tubes, and screens (A)	HT, RS	Carbon or low-alloy steel	Air – inside the module, uncontrolled or Air – outdoor	Reduced heat convection capacity due to blockage	IV.M2, "Ventilation Surveillance Program"	Generic program
V.5.A-10	Coatings (if applied) on metallic components (C)	SS Not ITS	Coating	Air – inside the overpack, uncontrolled, or Air – outdoor	Loss of coating integrity due to blistering, cracking, flaking, peeling, or physical damage	IV.S2, "Protective Coating Monitoring and Maintenance Program"	Generic program

Table V.5.A VSC-24 Storage Cask: Ventilated Concrete Cask (VCC)

Item	Structure and/or Component[1]	Intended Function[2]	Material	Environment	Aging Effect/ Mechanism	Aging Management Program (AMP)	Program Type
V.5.A-11	Lightning protection system (C)	SS Not ITS	Various materials	Air – outdoor	Loss of lightning protection due to wear, tear, damage, surface cracks, or other defects	IV.M1, "External Surfaces Monitoring of Mechanical Components"	Generic program
V.5.A-12	Cathodic protection systems (if applied) (B)	Cathodic protection of rein-forcing steel	Various materials	Embedded in concrete	Reduction of cathodic protection effect on bond strength due to degradation of cathodic protection current	IV.S1, "Concrete Structures Monitoring Program"	Generic program

1. The structures and/or components are classified according to importance to safety, as follows: A = critical to safety operation, B = major impact on safety, and C = minor impact on safety.
2. The important to safety (ITS) functions of the structures and components are as follows: CB = confinement boundary, CC = criticality control, RS = radiation shielding, HT = heat transfer, SS = structural support, and FR = fuel retrievability.

Table V.5.B VSC-24 Storage Cask: Multi-Assembly Sealed Basket (MSB)

Item	Structure and/or Component[1]	Intended Function[2]	Material	Environment	Aging Effect/ Mechanism	Aging Management Program (AMP)	Program Type
V.5.B-1	MSB shell (including welds): Shell; bottom plate; structural lid; port covers; and associated welds (A)	CB, SS, HT, FR	Steel	Air – inside the VCC, uncontrolled (external), Helium (internal)	Cumulative fatigue damage due to cyclic loading	Fatigue is a TLAA to be evaluated for the requested period of extended operation. See III.2, "Fatigue of Metal and Concrete Structures and Components," for acceptable methods for meeting the acceptance criteria in Section 3.5.1 of NUREG-1927.	TLAA
V.5.B-2	MSB confinement boundary: Shell; bottom plate; structural lid/shield lid; drain, vent, and backfilling port covers; and associated welds (A)	CB, SS, HT, FR	Steel	Air – inside the VCC, uncontrolled (external), Helium (internal)	Cracking due to stress corrosion cracking; and loss of material due to corrosion, when exposed to moisture and aggressive chemicals in the environment	IV.M1, "External Surfaces Monitoring of Mechanical Components" IV.M3, "Welded Canister Seal and Leakage Monitoring Program"	Generic program
V.5.B-3	MSB internals: Basket assembly (sleeve assembly, shield lid, support plate and top and side ring) (A)	CC, CB, HT, SS, FR	Steel SA 516 Gr. 70; RX-277	Helium, radiation, elevated temperatures	Degradation of heat transfer, radiation shield, criticality control, confinement boundary, or structural support functions of the MSB internals due to extended exposure to high temperature and radiation.	IV.M5, "Canister/Cask Internals Structural and Functional Integrity Monitoring Program" Degradation of neutron-absorbing materials is a TLAA to be evaluated for the requested period of extended operation. See III.5, "Time-Dependent Degradation of Radiation Shielding Materials," for acceptable methods for meeting the acceptance criteria in Section 3.5.1 of NUREG-1927.	Generic program TLAA

1. The structures and/or components are classified according to importance to safety, as follows: A = critical to safety operation, B = major impact on safety, and C = minor impact on safety.
2. The important to safety (ITS) functions of the structures and components are as follows: CB = confinement boundary, CC = criticality control, RS = radiation shielding, HT = heat transfer, SS = structural support, and FR = fuel retrievability.

Table V.5.C VSC-24 Storage Cask: Basemat (Pad) and Approach Slab (Ramp)

Item	Structure and/or Component[1]	Intended Function[2]	Material	Environment	Aging Effect/ Mechanism	Aging Management Program (AMP)	Program Type
V.5.C-1	Concrete: Basemat (pad) and approach slab (ramp) (above-grade) (B)	SS	Reinforced Concrete	Air – outdoor	Cracking due to expansion from reaction with aggregates; Increase in porosity/permeability, cracking, or loss of material (spalling, scaling) due to aggressive chemical attack; Cracking and loss of material (spalling, scaling) due to freeze-thaw; Cracking, loss of bond, and loss of material (spalling, scaling) due to corrosion of embedded steel; Increase in porosity and permeability or loss of strength due to leaching of calcium hydroxide and carbonation; Cracking and distortion due to increased stress level from settlement	IV.S1, "Concrete Structures Monitoring Program" Note: Further evaluation may be required to manage all of these aging effects/mechanisms for the below grade or inaccessible areas of the basemat and approach ramp (See line items V.5.C-2 to -7 for details)	Generic program

Table V.5.C VSC-24 Storage Cask: Basemat (Pad) and Approach Slab (Ramp)

Item	Structure and/or Component[1]	Intended Function[2]	Material	Environment	Aging Effect/ Mechanism	Aging Management Program (AMP)	Program Type
V.5.C-2	Concrete: Basemat (pad) and approach slab (ramp) (below-grade) (B)	SS	Reinforced concrete	Groundwater/ soil	Loss of material (spalling, scaling) and cracking due to freeze-thaw	Further evaluation is required for facilities that are located in moderate to severe weathering conditions (weathering index >100 day-inch/yr) (NUREG-1557) to determine if a site-specific AMP is needed. A site-specific AMP is not required if documented evidence confirms that the existing concrete had air entrainment content (as per Table CC-2231-2 of the ASME Code, Section III Division 2), and subsequent inspections of accessible areas did not exhibit degradation related to freeze-thaw. Such inspections should be considered a part of the evaluation. If this condition is not satisfied, then a site-specific AMP is required to manage loss of material (spalling, scaling) and cracking due to freeze-thaw of concrete in inaccessible areas. The weathering index for the continental United States is shown in ASTM C33-90, Fig. 1.	Further evaluation, for facilities located in moderate to severe weathering conditions
V.5.C-3	Concrete: Basemat (pad) and approach slab (ramp) (below-grade) (B)	SS	Reinforced concrete	Groundwater/ soil	Cracking due to expansion from reaction with aggregates	Further evaluation is required to determine if a site-specific AMP is needed to manage cracking and expansion due to reaction of concrete with aggregate in inaccessible areas. A site-specific AMP is not required if (1) as described in NUREG-1557, investigations, tests, and petrographic examinations of aggregates per ASTM C295 and other ASTM reactivity tests, as required, can demonstrate that those aggregates do not adversely react within concrete, or (2) for potentially reactive aggregates, it is demonstrated that the in-place concrete can perform its intended function.	Further evaluation to determine whether a site-specific AMP is needed

Table V.5.C VSC-24 Storage Cask: Basemat (Pad) and Approach Slab (Ramp)

Item	Structure and/or Component[1]	Intended Function[2]	Material	Environment	Aging Effect/ Mechanism	Aging Management Program (AMP)	Program Type
V.5.C-4	Concrete: Basemat (pad) and approach slab (ramp) (below-grade) (B)	SS	Reinforced concrete	Groundwater/ soil	Cracking; loss of bond; and loss of material (spalling, scaling) due to corrosion of embedded steel	For facilities with non-aggressive groundwater/soil, i.e., pH >5.5, chlorides <500 ppm, and sulfates <1500 ppm, as a minimum, consider (1) examination of the exposed portions of the below-grade concrete, when excavated for any reason, and (2) periodic monitoring of below-grade water chemistry, including consideration of potential seasonal variations. For facilities with aggressive groundwater/soil (i.e., pH <5.5, chlorides >500 ppm, or sulfates >1500 ppm), and/or where the concrete structural elements have experienced degradation, a site-specific AMP accounting for the extent of the degradation experienced should be implemented to manage the concrete aging during the period of extended operation.	Further evaluation to determine whether a site-specific AMP is needed
V.5.C-5	Concrete (inaccessible areas): Basemat (pad) and approach slab (ramp) (B)	SS	Reinforced concrete	Groundwater/ soil	Increase in porosity and permeability; cracking; loss of material (spalling, scaling) due to aggressive chemical attack	For facilities with non-aggressive groundwater/soil, i.e., pH >5.5, chlorides <500 ppm, and sulfates <1500 ppm, as a minimum, consider (1) examination of the exposed portions of the below-grade concrete, when excavated for any reason, and (2) periodic monitoring of below-grade water chemistry, including consideration of potential seasonal variations. For facilities with aggressive groundwater/soil (i.e., pH <5.5, chlorides >500 ppm, or sulfates >1500 ppm), and/or where the concrete structural elements have experienced degradation, a site-specific AMP accounting for the extent of the degradation experienced should be implemented to manage the concrete aging during the requested period of extended operation.	Further evaluation to determine whether a site-specific AMP is needed

Table V.5.C VSC-24 Storage Cask: Basemat (Pad) and Approach Slab (Ramp)

Item	Structure and/or Component[1]	Intended Function[2]	Material	Environment	Aging Effect/ Mechanism	Aging Management Program (AMP)	Program Type
V.5.C-6	Concrete (inaccessible areas): Exterior below-grade; basemat (concrete pad) and approach slab (ramp) (B)	SS	Reinforced concrete	Groundwater/ soil	Increase in porosity and permeability or loss of strength due to leaching of calcium hydroxide and carbonation	Further evaluation is required to determine if a site-specific AMP is needed to manage increase in porosity and permeability due to leaching of calcium hydroxide and carbonation of concrete in inaccessible areas. A site-specific AMP is not required if (1) there is evidence in the accessible areas that the flowing water has not caused leaching and carbonation, or (2) evaluation determines that the observed leaching of calcium hydroxide and carbonation in accessible areas has no impact on the intended function of the concrete structure.	Further evaluation to determine whether a site-specific AMP is needed
V.5.C-7	Concrete: Basemat (pad) and approach slab (ramp) (B)	SS	Reinforced concrete	Air – outdoor; Groundwater/ soil	Reduction of strength, cracking due to differential settlement, and erosion of porous concrete sub-foundation	Further evaluation is required to determine if a site-specific AMP is needed, if a de-watering or any other system is relied upon for control of settlement, to ensure proper functioning of that system through the requested period of extended operation.	Further evaluation to determine whether a site-specific AMP is needed

1. The structures and/or components are classified according to importance to safety, as follows: A = critical to safety operation, B = major impact on safety, and C = minor impact on safety.
2. The important to safety (ITS) functions of the structures and components are as follows: CB = confinement boundary, CC = criticality control, RS = radiation shielding, HT = heat transfer, SS = structural support, and FR = fuel retrievability.

V.6 Westinghouse MC-10 Metal Dry Storage Cask

V.6.1 System Description

The MC-10 Metal Dry Storage Cask is a self-contained vertical bolted metal storage system that provides passive heat removal. The used fuel assemblies are loaded directly into a basket that is integrated into the cask, without the use of a separate canister. A schematic diagram of the MC-10 system is shown in Fig. V.6-1. Each cask stores 24 pressurized water reactor (PWR) or 52 boiling water reactor (BWR) fuel assemblies with burnup up to 35,000 MWD/MTU and heat dissipation up to 15 kW. The casks are provided with pressure monitoring systems for monitoring cask interior helium pressure and leak tightness. The major structures, systems, and components with safety functions include the cask body (including the outer shell containing neutron-shielding materials), fuel basket, cask covers and penetrations, instrumentation port, cask seals, and the pad.

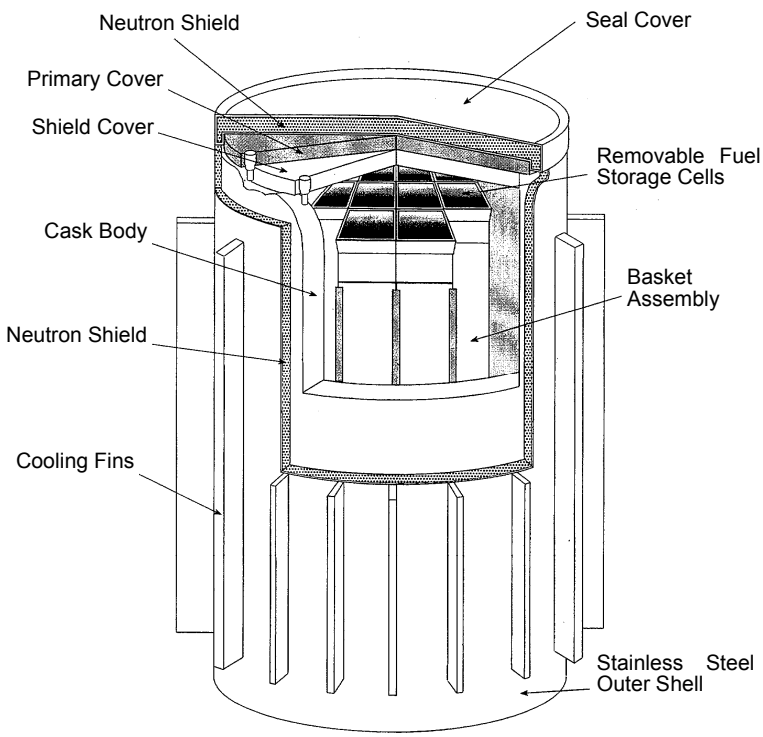

Figure V.6-1: Diagram of MC-10 spent-fuel dry storage cask (Westinghouse MC-10, 1997).

Cask Body (including outer shell): The cask body consists of a forged low-alloy steel container approximately 2.41 m (95 in.) in diameter and 4.95 m (195 in.) in length, with a 254-mm (10-in.)-thick wall (for gamma shielding). The cask body is welded to a 279-mm (11-in.)-thick low-alloy steel bottom plate. The cask body and bottom plate are coated internally with thermally sprayed aluminum for corrosion protection. The internal cavity is filled with helium for heat transfer and corrosion protection. The cask body and bottom plate serve as part of the confinement barrier.

The cask body is enclosed by a 6.4-mm (0.25-in.)-thick stainless steel outer shell, which encases a 76.2-mm (3-in.)-thick layer of BISCO NS-3 that provides neutron shielding. The outer shell is coated externally with an epoxy coating for corrosion protection. Four low-alloy steel trunnions are bolted to the cask body for lifting and rotation of the cask. Twenty-four (24) 25.4-mm (1-in.)-thick carbon

steel cooling fins are welded to the outer shell and extend outward to provide a positive conduction path for heat dissipation.

Fuel Basket Assembly: The fuel basket (Fig. V.6-2) is a one-piece fabricated aluminum grid system that contains 24 removable stainless steel fuel storage cells. Each cell consists of a stainless steel enclosure, borated neutron-absorbing plates (for criticality control), and steel wrappers. Figure V.6-3 shows the MC-10 basket cell details.

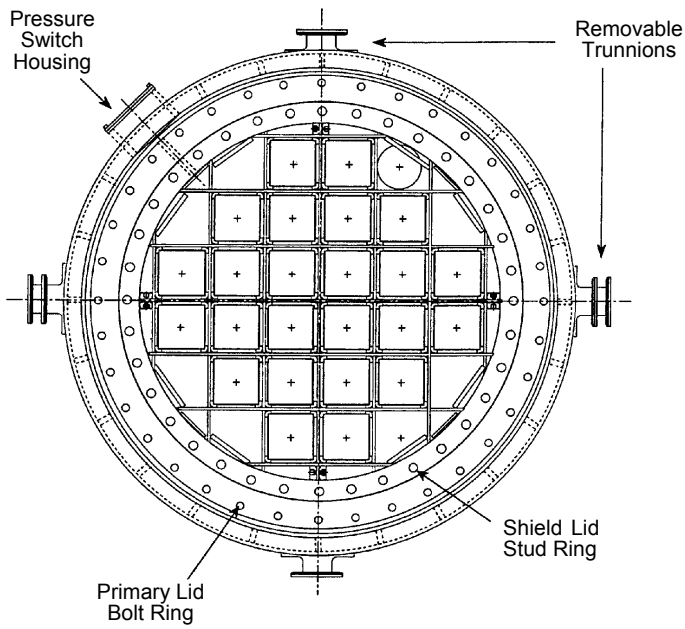

Figure V.6-2: MC-10 fuel basket overview (Westinghouse MC-10, 1997).

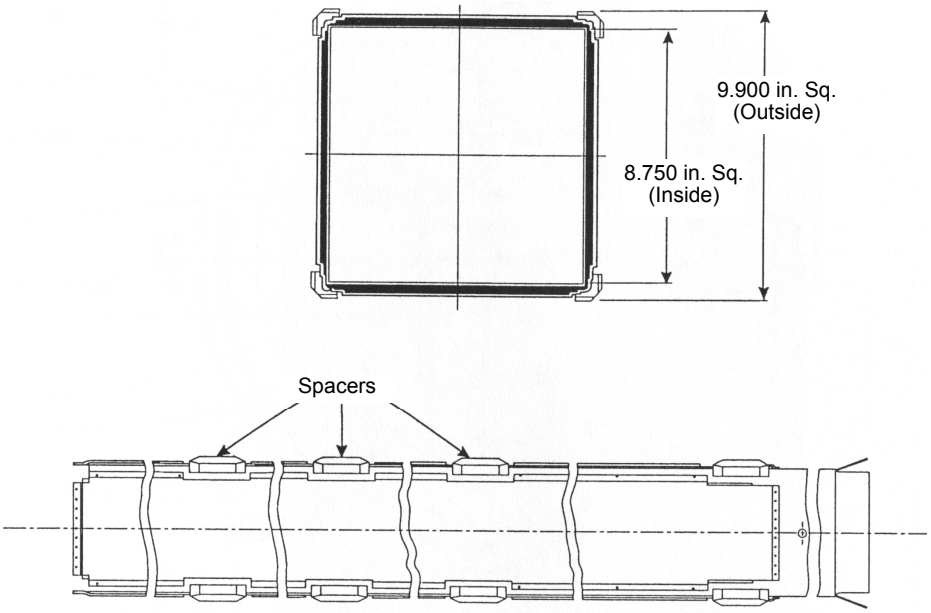

Figure V.6-3: MC-10 fuel cell detail (Westinghouse MC-10, 1997).

Cask Covers and Penetrations: The top end of the cask is sealed by four separated lids (shield lid, primary lid, seal lid, and neutron shield lid) to provide a multiple-barrier redundant-seal system to ensure leak tightness, as shown in Fig. V.6-4. Penetrations are provided for monitoring cask internal helium pressure and for seal leakage testing to monitor the leak-tightness of O-ring assemblies. These four lids and the seal systems are described below.

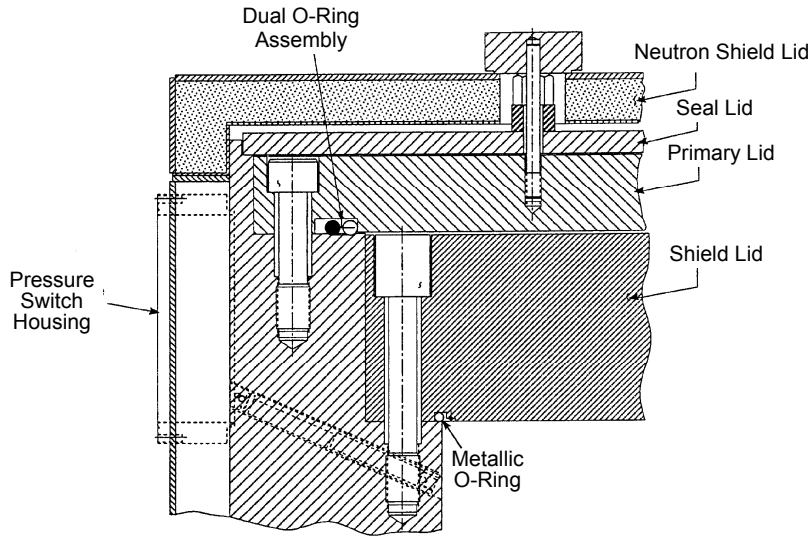

Figure V.6-4: MC-10 cask closure details (Westinghouse MC-10, 1997).

Shield Lid: The shield lid is a 127-mm (5-in.)-thick low-alloy steel plate directly above the fuel basket. The shield lid is bolted to the cask wall by thirty-six (36) 38.1-mm (1.5-in.)-diameter studs and nuts as shown in Fig. V.6-5. A metallic O-ring provides the seal between the shield lid and cask wall. The shield lid is coated with thermally sprayed aluminum for corrosion protection. The lid includes four tapped holes to interface with lifting equipment.

Two penetrations are provided in the shield lid: a vent penetration for drying and backfilling operations and a siphon penetration and drain on the cask bottom for draining water. Each penetration is provided with a stainless steel cover, which is secured by stainless steel bolts. The covers are sealed with metallic seals. The drain port is also equipped with a shield plug.

Primary Lid: The primary lid is a 88.9-mm (3.5-in.)-thick carbon steel plate located above the shield lid (Fig. V.6-6). The primary lid is bolted to the cask wall by thirty-six (36) 34.9-mm (1.375-in.)-diameter low-alloy steel bolts. A metallic and elastomer dual O-ring assembly provides the seal between the primary lid and cask wall. Two penetrations with metallic O-rings are provided for leak testing of the O-ring assembly. Like the shield lid, the primary lid includes four tapped holes to interface with the lifting equipment.

Seal Lid: The seal lid as shown in Fig. V.6-4 is a 25.4-mm (1-in.)-thick carbon steel plate, which is bolted to the primary lid using twelve (12) 28.6-mm (1.125-in.)-diameter studs. It provides a redundant cover for the cask. No O-ring is provided in the seal lid.

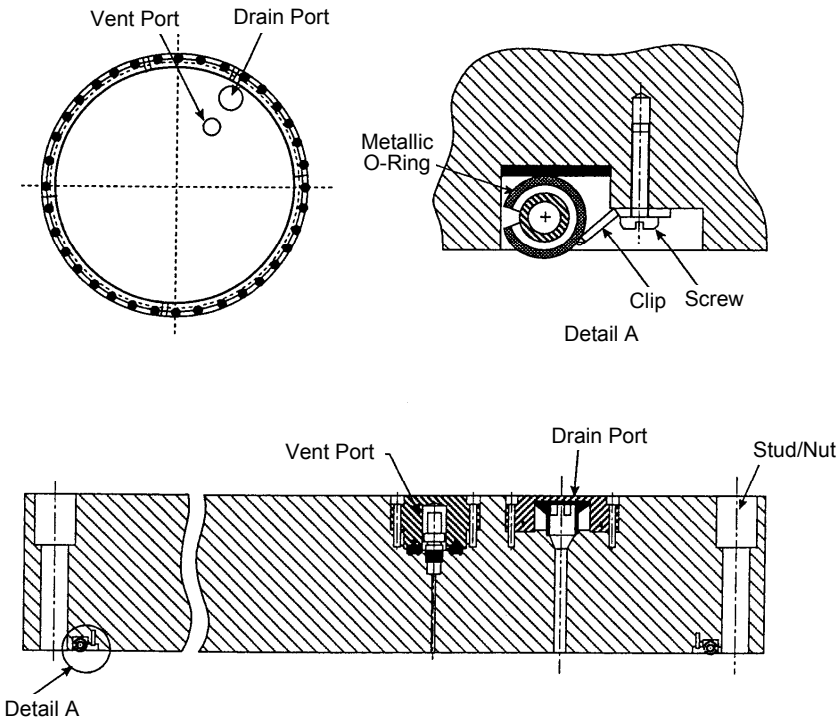

Figure V.6-5: MC-10 shield lid (Westinghouse MC-10, 1997).

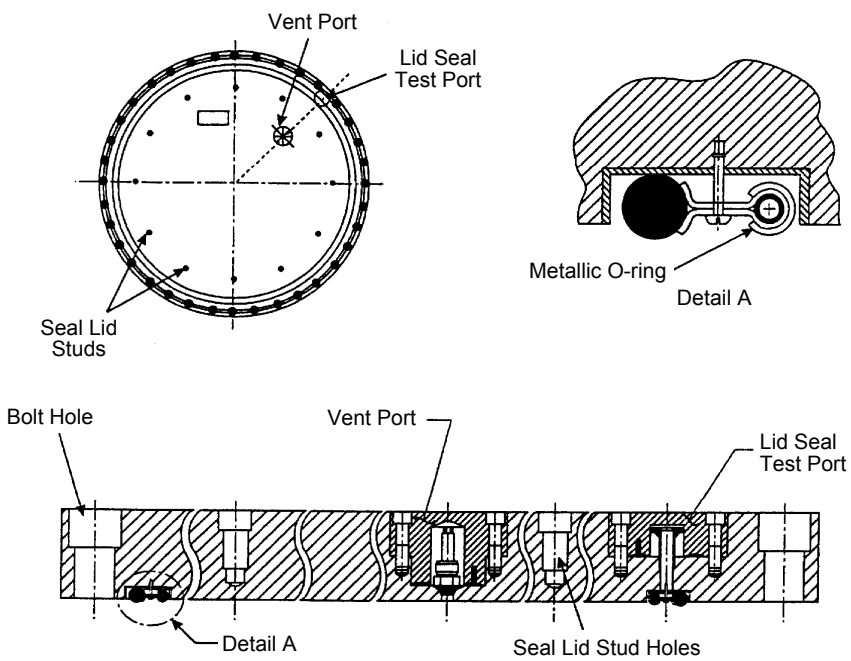

Figure V.6-6: MC-10 cask primary lid and bolting details (Westinghouse MC-10, 1997).

Closure Lid (Neutron Shield Lid): The final protective closure cover, as shown in Fig. V.6-4, is the neutron shield lid, which is a stainless steel closure containing ≈127-mm (5-in.)-thick BISCO NS-3 (neutron-absorbing material) for neutron shielding. The closure lid is exposed to the atmosphere and is secured to the seal lid by using the same studs that are used to secure the seal lid to the primary lid. Elastomer O-rings provide a watertight seal for the closure lid. In addition, instead of being sealed by elastomer O-rings and studs, the closure lid is often welded over the primary lid to provide seal redundancy.

Instrumentation Port: A pressure sensor port is located on the side of the cask to monitor internal pressure. It consists of an inner and an outer housing. The stainless steel inner housing cover is sealed with metallic seals and stainless steel bolts. The inner housing cover seal is part of the cask confinement boundary. The outer housing cover is sealed with elastomer seals and bolts. The outer housing minimizes the introduction of moisture into the housing during cask immersion in the spent-fuel pool.

Cask Seal: For redundancy, at least two metal seals exist at each leak path between the cask cavity and the environment. The metal seals consist of a nickel-based alloy spring with an aluminum jacket and stainless steel sleeve. The metal seals are designed to be leak-tight. Elastomer seals associated with the cask do not perform a function required for license renewal.

The cask is loaded underwater in the spent-fuel pool and the shield cover is placed on the cask. After being lifted out of the spent-fuel pool, the shield lid is bolted in place, and the cask is drained, pressurized with helium, and decontaminated. Next, a pressure-monitoring device is mounted in the primary seal, the primary lid is bolted in place, and the cask is vacuum-dried and repressurized with helium. The seal lid is then bolted to the primary lid, and the neutron shield lid is bolted or often welded to the cask rim. Following decontamination of the outer surface, the cask is transferred to the ISFSI site and set in place on the concrete pad and normal radiation survey monitoring and daily monitoring of internal helium pressure are performed on the cask.

The design base of the fuel assumes that it has been irradiated to an exposure of 35,000 MWD/MTU and cooled for ten years.

The MC-10 cask contains both gamma- and neutron-shielding materials, which limit surface rate to a maximum 58 mrem per hour. The steel of the cask wall provides gamma shielding, and the BISCO NS-3 neutron-absorbing material, filling the cavities between the cask wall and outer shell, provides neutron shielding.

The MC-10 is designed for passive heat dissipation of up to 15 kW, or 0.625 kW per rod. Decay heat is removed from the cask internals to limit the maximum fuel rod cladding temperature to less than 340°C (644°F). Heat is extracted by conduction through the basket grid members and through the grid/cask wall interface. Heat dissipation to ambient atmosphere is through the cooling fins welded to the cask wall.

Pad: The reinforced concrete pad, designed to accommodate 28 casks, is 70.1 m (230 ft) long, 9.8 m (32 ft) wide, and approximately 0.91 m (3.0 ft) thick. The pad is partially embedded.

V.6.2 Codes and Service Life

Codes and standards representing an acceptable level of design are as follows:

a. American Welding Society (AWS) Structural Welding Code (AWS Dl.l-1980)
b. American Iron and Steel Institute (AISI) Steel Products Manual
c. American Society of Mechanical Engineers (ASME) Boiler and Pressure Vessel Code, Section II
d. American Society for Testing and Materials (ASTM) Standards

The concrete pads are built in accordance with the BOCA Basic Building Code and applicable American Concrete Institute codes and standards (ACI 318-77 and 1980 Supplement and Commentary and ACI 315-74) with design compressive strength of 3000 psi after 28 days.

V.6.3 Existing Inspection and Monitoring Program

The current inspection program for the MC-10 system during the initial or license renewal term (20- or 40-year extension) involves monitoring of the cask internal helium pressure on a daily basis, in addition to the normal radiation monitoring. The pressure-monitoring device is mounted to the wall of the cask to provide a direct means of detecting a loss of cask integrity or fuel rod integrity with either a low-pressure or a high-pressure alarm. The pressure transducers are calibrated biannually. A cover seal test port is provided to test the leakage of O-ring sealing systems.

The aging management of MC-10 casks in the Surry ISFSI relies on the Dry Storage Cask Inspection Activities Program during the requested period of extended operation (Surry ISFSI LRA 2002). The scope of program involves (1) the continuous pressure monitoring of the in-service dry storage casks, (2) the quarterly visual inspection of all dry storage casks that are in service at the Surry ISFSI, (3) a visual inspection of the MC-10 dry storage cask seal cover area, which is to be performed prior to the end of the original operating license period, and (4) the visual inspection of the normally inaccessible areas of casks in the event they are lifted in preparation for movement or an environmental cover is removed for maintenance.

The TLAAs and AMPs to manage aging effects for specific structures and components, materials of construction, and environments of the MC-10 spent-fuel storage cask are given in Tables V.6.A and V.6.B. In these tables, the DCSS components listed in the Structure and/or Component column are classified as “A”, “B”, or “C” according to importance to safety, as described in Section I.2.

V.6.4 References

ACI 315-74, Manual of Standard Practice for Detailing Reinforced Concrete Structures, American Concrete Institute, Detroit, MI, 1974.

ACI 318-77 and 1980 Supplement and Commentary, Building Code Requirements for Reinforced Concrete, American Concrete Institute, Detroit, MI, 1977–1980.

AISI Steel Product Manual, American Iron and Steel Institute, Washington, DC, 1974.

ASME Boiler and Pressure Vessel Code, Section III, Rules for Construction of Nuclear Facility Components, Divisions 1 and 2, American Society of Mechanical Engineers, New York, 2004.

ASME Boiler and Pressure Vessel Code, Section II, Materials, ASME Boiler and Pressure Vessel Code, American Society of Mechanical Engineers, New York, NY, 2004.

ASTM C295, Standard Guide for Petrographic Examination of Aggregates for Concrete, ASTM International, West Conshohocken, PA, 2012.

ASTM C33-90, Standard Specification for Concrete Aggregates, ASTM International, West Conshohocken, PA, 1990.

AWS D1.1, Structural Welding Code – Steel, American Welding Society, 1980.

BOCA Basic Building Code, Building Officials and Code Administrations International, Inc., 1981.

NUREG-1557, "Summary of Technical Information and Agreements from Nuclear Management and Resources Council Industry Reports Addressing License Renewal," October 1996.

NUREG-1927, Rev. 1, Standard Review Plan for Renewal of Spent Fuel Dry Cask Storage System Licenses and Certificates of Compliance, U.S. Nuclear Regulatory Commission, Washington, DC, March 2011.

Virginia Electric and Power Company, Surry Independent Spent Fuel Storage Installation (ISFSI) License Renewal Application, Docket No. 72-2, April 29, 2002.

Westinghouse MC-10 Spent Fuel Storage Cask, Chapter 8, Monograph on Spent Nuclear Fuel Storage Technologies, E. R. Johnson, P. M. Saverot, eds., INMM, Northbrook, IL, 60062, March 1997.

Table V.6.A Westinghouse MC-10 Metal Dry Storage Cask: Storage Cask

Item	Structure and/or Component[1]	Intended Function[2]	Material	Environment	Aging Effect/ Mechanism	Aging Management Program (AMP)	Program Type
V.6.A-1	Storage cask external surfaces: Neutron shield or closure lid and bolting, radial neutron shield shell, trunnions, cooling fins and welds (A)	RS, HT, SS	Stainless steel; carbon steel (cooling fins); steel (bolting)	Air – outdoor	Loss of material due to corrosion	IV.M1, "External Surfaces Monitoring of Mechanical Components"	Generic program
V.6.A-2	Storage cask components under neutron shield lid: Primary lid, instrumentation seal lid, and vent and lid seal test port covers, and bolting (A)	RS, HT, SS	Carbon steel; low-alloy steel	Air – enclosed space, uncontrolled	Loss of material due to corrosion	Further evaluation is required to establish the extent and frequency of inspection.	Further evaluation to determine if a site-specific AMP is needed
V.6.A-3	Neutron shield lid or closure lid (A)	RS	BISCO NS-3 encased in stainless steel shell	Radiation and elevated temperature in air environment	Degradation of shielding properties due to exposure to high temperature and gamma and neutron radiation	Degradation of neutron-absorbing materials is a time-limited aging analysis (TLAA) to be evaluated for the requested period of extended operation. See III.5, "Time-Dependent Degradation of Radiation Shielding Materials," for acceptable methods for meeting the acceptance criteria in Section 3.5.1 of NUREG-1927.	TLAA
V.6.A-4	Radial neutron shield (A)	RS	BISCO NS-3 encased in stainless steel or carbon steel shell	Radiation and elevated temperature in air environment	Degradation of shielding material due to radiation exposure	Degradation of radiation-shielding materials is a TLAA to be evaluated for the requested period of extended operation. See III.5, "Time-Dependent Degradation of Radiation-Shielding Materials," for acceptable methods for meeting the acceptance criteria in Section 3.5.1 of NUREG-1927.	TLAA

Table V.6.A Westinghouse MC-10 Metal Dry Storage Cask: Storage Cask

Item	Structure and/or Component[1]	Intended Function[2]	Material	Environment	Aging Effect/ Mechanism	Aging Management Program (AMP)	Program Type
V.6.A-5	Bolting for primary lid, seal lid, vent and test port, and covers (A)	SS	Steel	Air – enclosed space, uncontrolled	Cumulative fatigue damage/fatigue	Fatigue is a TLAA to be evaluated for the requested period of extended operation. See III.2, "Fatigue of Metal and Concrete Structures and Components," for acceptable methods for meeting the acceptance criteria in Section 3.5.1 of NUREG-1927.	TLAA
V.6.A-6	Instrumentation port and pressure monitoring system: Inner and outer housing, inner housing seal cover, and associated elastomer seals and bolts. (B)	Monitor-ing system	Steel, elasto-mers, rubber and similar materials	Air – enclosed space, uncontrolled; or Air - outdoor	Loss of material due to general, pitting, and crevice corrosion	IV.M1, "External Surfaces Monitoring of Mechanical Components"	Generic program
V.6.A-7	Moisture barriers (caulking, sealants) (if applied) (C)	SS Not important to safety (ITS)	Elastomers, rubber and other similar materials	Air – outdoor	Loss of sealing due to wear, damage, erosion, tear, surface cracks, or other defects	IV.M1, "External Surfaces Monitoring of Mechanical Components"	Generic program
V.6.A-8	Coatings (if applied) on metallic components (C)	SS Not ITS	Coating	Air – inside the overpack, uncontrolled, or Air – outdoor	Loss of coating integrity due to blistering, cracking, flaking, peeling, or physical damage	IV.S2, "Protective Coating Monitoring and Maintenance Program"	Generic program
V.6.A-9	Lightning protection system (C)	SS Not ITS	Various materials	Air – outdoor	Loss of lightning protection due to wear, tear, damage, surface cracks, or other defects	IV.M1, "External Surfaces Monitoring of Mechanical Components"	Generic program

1 The structures and/or components are classified according to importance to safety, as follows: A = critical to safety operation, B = major impact on safety, and C = minor impact on safety.
2 The important to safety (ITS) functions of the structures and components are as follows: CB = confinement boundary, CC = criticality control, RS = radiation shielding, HT = heat transfer, SS = structural support, and FR = fuel retrievability.

Table V.6.B Westinghouse MC-10 Metal Dry Storage Cask: Internal Contents of the Confinement Vessel

Item	Structure and/or Component	Intended Function	Material	Environment	Aging Effect/ Mechanism	Aging Management Program (AMP)	Program Type
V.6.B-1	Primary lid/shield lid, cask body, and bottom plate (A)	CB, SS, RS, HT	Low-alloy steel	Limited air (external), Helium (internal)	Cumulative fatigue damage/fatigue	Fatigue is a TLAA to be evaluated for the requested period of extended operation. See III.2, "Fatigue of Metal and Concrete Structures and Components," for acceptable methods for meeting the acceptance criteria in Section 3.5.1 of NUREG-1927.	TLAA
V.6.B-2	Helicoflex seals (includes stainless steel cladding on sealing surface): Lid, drain, vent, test, and instrumentation port closures (A)	CB	Aluminum, silver, stainless steel, Ni-base alloys	Air – enclosed space, uncontrolled (external), Helium (internal)	Loss of sealing forces due to stress relaxation and creep of the metallic O-rings, corrosion and loss of preload of the closure bolts	IV.M4, "Bolted Cask Seal and Leakage Monitoring Program"	Generic program
V.6.B-3	Fuel basket assembly: Aluminum and stainless steel plates, neutron absorber plates, stainless steel plugs, basket rails, drain pipe (A)	CC, SS, HT, RS, FR	Stainless steel, aluminum, borated neutron absorbing plates	Helium, radiation, and elevated temperature	Degradation of heat transfer, radiation shield, criticality control, or structural support function due to extended exposure to high temperature and radiation	IV.M5, "Canister/Cask Internals Structural and Functional Integrity Monitoring Program" Degradation of neutron-absorbing materials is a TLAA to be evaluated for the requested period of extended operation. See III.4, "Time-Dependent Degradation of Neutron-Absorbing Materials," for acceptable methods for meeting the acceptance criteria in Section 3.5.1 of NUREG-1927.	Generic program TLAA

1 The structures and/or components are classified according to importance to safety, as follows: A = critical to safety operation, B = major impact on safety, and C = minor impact on safety.
2 The important to safety (ITS) functions of the structures and components are as follows: CB = confinement boundary, CC = criticality control, RS = radiation shielding, HT = heat transfer, SS = structural support, and FR = fuel retrievability.

Table V.6.C Westinghouse MC-10 Metal Dry Storage Cask: Basemat (Pad) and Approach Slab (Ramp)

Item	Structure and/or Component[1]	Intended Function[2]	Material	Environment	Aging Effect/ Mechanism	Aging Management Program (AMP)	Program Type
V.6.C-1	Concrete: Basemat (pad) and approach slab (ramp) (above-grade) (B)	SS	Reinforced concrete	Air – outdoor	Cracking due to expansion from reaction with aggregates; Increase in porosity/permeability, cracking, or loss of material (spalling, scaling) due to aggressive chemical attack; Cracking and loss of material (spalling, scaling) due to freeze-thaw; Cracking, loss of bond, and loss of material (spalling, scaling) due to corrosion of embedded steel; Increase in porosity and permeability, or loss of strength due to leaching of calcium hydroxide and carbonation; Cracking and distortion due to increased stress level from settlement.	IV.S1, "Concrete Structures Monitoring Program" Note: Further evaluation may be required to manage all of these aging effects/mechanisms for the below grade or inaccessible areas of the basemat and approach ramp (See line items V.6.C-2 to -7 for details)	Generic program

Table V.6.C Westinghouse MC-10 Metal Dry Storage Cask: Basemat (Pad) and Approach Slab (Ramp)

Item	Structure and/or Component[1]	Intended Function[2]	Material	Environment	Aging Effect/ Mechanism	Aging Management Program (AMP)	Program Type
V.6.C-2	Concrete: Basemat (pad) and approach slab (ramp) (above-grade) (B)	SS	Reinforced concrete	Groundwater/ soil	Cracking; loss of bond; and loss of material (spalling, scaling) due to corrosion of embedded steel	For facilities with non-aggressive groundwater/soil, i.e., pH >5.5, chlorides <500 ppm, and sulfates <1500 ppm, as a minimum, consider (1) examination of the exposed portions of the below-grade concrete, when excavated for any reason, and (2) periodic monitoring of below-grade water chemistry, including consideration of potential seasonal variations. For facilities with aggressive groundwater/soil (i.e., pH <5.5, chlorides >500 ppm, or sulfates >1500 ppm), and/or where the concrete structural elements have experienced degradation, a site-specific AMP accounting for the extent of the degradation experienced should be implemented to manage the concrete aging during the period of extended operation.	Further evaluation to determine whether a site-specific AMP is needed
V.6.C-3	Concrete: Basemat (pad) and approach slab (ramp) (below-grade) (B)	SS	Reinforced concrete	Any environment	Cracking due to expansion from reaction with aggregates	Further evaluation is required to determine if a site-specific AMP is needed to manage cracking and expansion due to reaction of concrete with aggregate in inaccessible areas. A site-specific AMP is not required if (1) as described in NUREG-1557, investigations, tests, and petrographic examinations of aggregates per ASTM C295 and other ASTM reactivity tests, as required, can demonstrate that those aggregates do not adversely react within concrete, or (2) for potentially reactive aggregates, it is demonstrated that the in-place concrete can perform its intended function.	Further evaluation to determine whether a site-specific AMP is needed

Table V.6.C Westinghouse MC-10 Metal Dry Storage Cask: Basemat (Pad) and Approach Slab (Ramp)

Item	Structure and/or Component[1]	Intended Function[2]	Material	Environment	Aging Effect/ Mechanism	Aging Management Program (AMP)	Program Type
V.6.C-4	Concrete: Basemat (pad) and approach slab (ramp) (below-grade) (B)	SS	Reinforced concrete	Groundwater/ soil	Loss of material (spalling, scaling) and cracking due to freeze-thaw	Further evaluation is required for facilities that are located in moderate to severe weathering conditions (weathering index >100 day-inch/yr) (NUREG-1557) to determine if a site-specific AMP is needed. A site-specific AMP is not required if documented evidence confirms that the existing concrete had air entrainment content (as per Table CC-2231-2 of the ASME Code, Section III Division 2), and subsequent inspections of accessible areas did not exhibit degradation related to freeze-thaw. Such inspections should be considered a part of the evaluation. If this condition is not satisfied, then a site-specific AMP is required to manage loss of material (spalling, scaling) and cracking due to freeze-thaw of concrete in inaccessible areas. The weathering index for the continental United States is shown in ASTM C33-90, Fig. 1.	Further evaluation to determine whether a site-specific AMP is needed
V.6.C-5	Concrete (inaccessible areas): Basemat (pad) and approach slab (ramp) (B)	SS	Reinforced concrete	Groundwater/ soil	Increase in porosity and permeability; cracking; loss of material (spalling, scaling) due to aggressive chemical attack	For facilities with non-aggressive groundwater/soil, i.e., pH >5.5, chlorides <500 ppm, and sulfates <1500 ppm, as a minimum, consider (1) examination of the exposed portions of the below-grade concrete, when excavated for any reason, and (2) periodic monitoring of below-grade water chemistry, including consideration of potential seasonal variations. For facilities with aggressive groundwater/soil (i.e., pH <5.5, chlorides >500 ppm, or sulfates >1500 ppm), and/or where the concrete structural elements have experienced degradation, a site-specific AMP accounting for the extent of the degradation experienced should be implemented to manage the concrete aging during the requested period of extended operation.	Further evaluation to determine whether a site-specific AMP is needed

Table V.6.C Westinghouse MC-10 Metal Dry Storage Cask: Basemat (Pad) and Approach Slab (Ramp)

Item	Structure and/or Component[1]	Intended Function[2]	Material	Environment	Aging Effect/ Mechanism	Aging Management Program (AMP)	Program Type
V.6.C-6	Concrete (inaccessible areas): Exterior below-grade; basemat (concrete pad) and approach slab (ramp) (B)	SS	Reinforced concrete	Groundwater/ soil	Increase in porosity and permeability or loss of strength due to leaching of calcium hydroxide and carbonation	Further evaluation is required to determine if a site-specific AMP is needed to manage increase in porosity and permeability due to leaching of calcium hydroxide and carbonation of concrete in inaccessible areas. A site-specific AMP is not required if (1) there is evidence in the accessible areas that the flowing water has not caused leaching and carbonation, or (2) evaluation determined that the observed leaching of calcium hydroxide and carbonation in accessible areas has no impact on the intended function of the concrete structure.	Further evaluation to determine whether a site-specific AMP is needed
V.6.C-7	Concrete: Basemat (pad) and approach slab (ramp) (B)	SS	Reinforced concrete	Air – outdoor; Groundwater/ soil	Reduction of strength, cracking due to differential settlement, and erosion of porous concrete sub-foundation	Further evaluation is required to determine if a site-specific AMP is needed, if a de-watering or any other system is relied upon for control of settlement, to ensure proper functioning of that system through the requested period of extended operation.	Further evaluation to determine whether a site-specific AMP is needed

1. The structures and/or components are classified according to importance to safety, as follows: A = critical to safety operation, B = major impact on safety, and C = minor impact on safety.
2. The important to safety (ITS) functions of the structures and components are as follows: CB = confinement boundary, CC = criticality control, RS = radiation shielding, HT = heat transfer, SS = structural support, and FR = fuel retrievability.

V.7 CASTOR V/21 and X/33 Dry Storage Casks

V.7.1 System Description

The CASTOR V/21 and X/33 storage casks are manufactured by General Nuclear Systems, Inc., a subsidiary of the German company Gesellschaft für Nuklear-Service mbH. These casks are designed to store 21 and 33 pressurized water reactor (PWR) spent nuclear fuel assemblies, respectively, in a vertical orientation without the need for an overpack. The two casks are of similar size, but the V/21 cask is designed for higher heat load fuel storage conditions, resulting in a smaller storage capacity as well as some other differences in design features noted here. Drawings of the two casks are shown in Figs. V.7-1 and V.7-2, respectively.

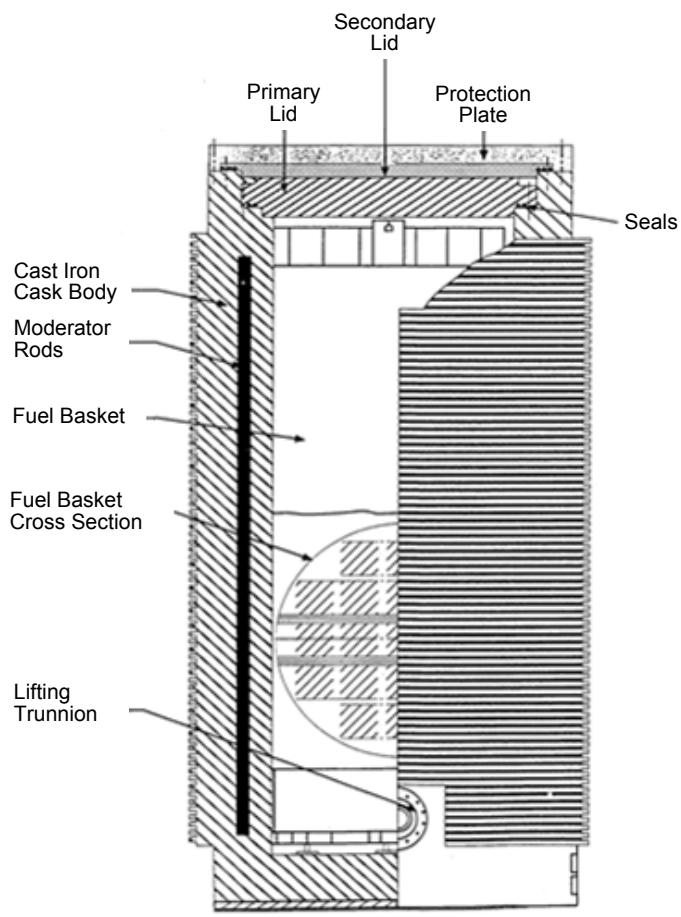

Figure V.7-1: Diagram of CASTOR V/21 spent-fuel dry storage cask (EPRI 1021048, 2010).

Cask Body: Both cask bodies are made up of a one-piece thick-walled nodular cast iron body sealed with two stainless steel lids bolted to the cask. Gamma and neutron radiation shielding is provided by the cast iron wall of the cask body, and additional neutron shielding is provided by polyethylene rods incorporated into the cask wall and polyethylene slabs at the cask bottom and secondary lid. The external surface of the V/21 cask, which is designed for higher heat load conditions, is covered with heat transfer fins that run circumferentially around the cask. An epoxy resin coating is applied to the outside surface of the casks to provide corrosion protection and facilitate decontamination, and the internal cavity surfaces and sealing surfaces have a galvanically applied nickel-based alloy

coating. The casks are fitted with two upper lifting trunnions and two lower rotating trunnions, and an environmental cover fits over the top of the casks to provide weather protection.

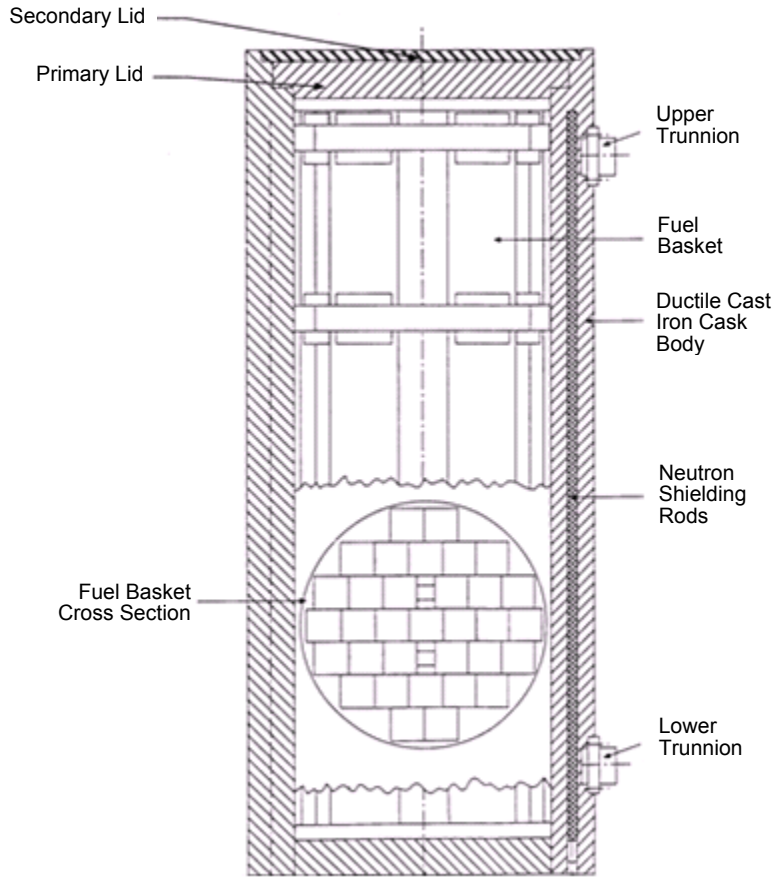

Figure V.7-2: Diagram of CASTOR X/33 spent-fuel dry storage cask (EPRI 1021048, 2010).

Primary Lid: The primary lid is made of stainless steel, with bolt holes machined near the lid perimeter to secure the lid to the cask body. Two grooves machined around the lid underside, inside the bolt circle, are provided for O-ring gaskets. The inner groove accepts a metal O-ring, which serves as the first barrier between the fuel and the environment. The outer groove accepts an elastomer O-ring. A 10-mm (0.4-in.)-diameter penetration through the lid provides access to the annulus between the two seals to perform post-assembly leak testing. This penetration is plugged when not in use.

For the V/21 cask, three additional penetrations through the primary lid are provided for various operations. A straight-through penetration used for water fill and drain operations is located near the perimeter of the lid and is sealed with a shield plug/cover plate. This location corresponds to the drainage guide pipe attached to the fuel basket. An additional inner cover plate is also provided at this location. The inner cover is secured by bolts and sealed with an elastomer O-ring. The outer cover for this penetration is secured by bolts and sealed with a metal O-ring. The other two penetrations, closely spaced and covered by a single cover secured by bolts, are also located near the lid perimeter, but 180° from the fill/drain penetration. The through-lid penetration at this location is equipped with a quick-disconnect fitting that is used for vacuum drying and backfilling

with the inert gas. The second penetration at this location leads to the lower edge of the lid and is designed for leak testing of an optional third lid gasket seal.

For the X/33 cask, two penetrations located near the perimeter of the primary lid are provided for flushing and venting of the cask. One penetration, which is provided for fill and drain operations, is sealed with a shield plug/cover plate that is secured by bolts and sealed with a metal O-ring. The other penetration is secured by a bolted cover plate with a metal O-ring seal. The through-lid penetration at this location is equipped with a quick-disconnect fitting, which is used for vacuum drying and backfilling with inert gas.

Secondary Lid: The secondary lid is also fabricated of stainless steel, again with bolt holes near the perimeter to secure it to the cask body above the primary lid. Two concentric O-ring grooves located inside the bolt circle accept O-ring gaskets in an arrangement similar to that in the primary lid. As with the primary lid, a 10-mm (0.4-in.)-diameter penetration through the lid provides access to the annulus between the two seals to perform post-assembly leak testing. A seal plug and gasket are used to close this penetration. A second penetration is equipped with a quick-disconnect fitting, which is used for vacuum drying and inert gas backfilling of the primary-secondary inter-lid space. A cover plate and gasket are secured in place with bolts when this penetration is not in use. The third penetration provides a pressure sensing port between the inter-lid space and a pressure sensor, which is mounted in the secondary lid and sealed with metallic O-rings.

Seal Monitoring System: The seal monitoring system in the V/21 and X/33 cask ensures that corrective actions can be taken in the event of a seal failure. During cask loading, gas with excess pressure (≈6 bar) is inserted in the inter-lid space. A leak in the primary lid will result in leakage of this gas into the cask inner cavity, and a leak in the secondary lid will result in escape of this gas to the atmosphere. The stainless steel pressure sensor incorporated in the secondary lid provides an alarm function if the pressure in the inter-lid space falls below a predetermined set point. The technical specifications for the CASTOR V/21 and X/33 casks at the Surry Independent Spent Fuel Storage Installation (ISFSI) state that the leak rate of the primary and secondary seals is not to exceed 10^{-6} mbar l/s, i.e., a pressure change of 10^{-6} mbar per second in a container whose volume is 1 liter.

Fuel Basket: The inside of the cask contains a fuel basket structure consisting of square tubes of welded stainless steel and borated (≈1% B content) stainless steel plates for criticality control. The basket design ensures exact positioning of the individual fuel assemblies. The CASTOR V/21 design contains 21 such tubes and thus can accommodate 21 PWR fuel assemblies, while the X/33 design contains 33 tubes and can accommodate 33 PWR fuel assemblies. The CASTOR V/21 cask is designed for higher heat load conditions corresponding to high fuel burnup, higher enrichment, and shorter cooling periods (approx. 5 years). The X/33 cask accommodates a greater number of fuel assemblies with lower heat loads and requires cooling periods of approx. 10 years or more, depending upon fuel burnup and enrichment.

The fuel basket fits tightly in the cask cavity. A space is maintained at the top of the basket cavity for convective heat transfer. A drainage guide pipe is welded to the side of the fuel basket near the outer circumference of the basket. The location of this pipe corresponds to the drain/fill penetration in the primary lid. This pipe provides a guide path for a flanged pipe, which is inserted through the primary lid to fill and drain the cask.

A rear breech plate is bolted to the bottom of the CASTOR V/21 cask to close the area of the moderator holes. Stainless steel moderator rod springs are located below the moderator rods in the CASTOR X/33 cask to ensure that the rods remain fully elevated to minimize neutron flux at the top of the cask.

Impact Limiter: When a loaded CASTOR V/21 cask is transferred from the reactor at a height greater than 0.4 m (15 in.) to emplacement on the concrete storage pad at the ISFSI, impact limiters are attached at the top and bottom of the cask. One impact limiter design is used for both the top and bottom V/21 cask limiters. It consists of a ring of a dozen 0.23-m (9-in.) lengths of 0.15-m (6-in.)-diameter Schedule 80 stainless steel pipe contained between 12.7-mm (1/2-in.)-thick stainless steel plates. A cask drop would crush the impacted pipe lengths between the steel plates, reducing the impact load on the cask. The X/33 cask uses an aluminum honeycomb material impact limiter enclosed in a stainless steel shell that is attached to the top of the X/33 cask during storage to absorb the impact force in the event of a tip-over accident. Impact limiter is not included as an line item in Table V.7.A for aging management.

Selected design parameters for the CASTOR V/21 and X/33 casks are summarized in Table V7-1. These two cask designs are currently being used at the Surry ISFSI (2005) under site-specific license SNM-2501, which was renewed in 2006 for an additional 40 years. At present, 25 CASTOR V/21 casks and one CASTOR X/33 cask have been loaded with a total of 558 fuel assemblies.

Table V.7-1 Selected design parameters for the CASTOR V/21 and X/33 dry storage casks.

Parameter	CASTOR V/21	CASTOR X/33
Fuel Type	PWR	PWR, BWR
No. of Assemblies	21	33 PWR, 76 BWR
Maximum Heat Load (kilowatts)[a]	21.0	9.9
Minimum Cooling Time (years)[a]	5	10
Maximum Fuel Burnup (MWd/ton)[a]	35,000	35,000
Height [m (in.)]	4.886 (192.4)	4.800 (189.0)
Outer Diameter [m (in.)]	2.400 m (94.5)	2.38 (93.7)
Inner Cavity Diameter [m (in.)]	1.527 (60.1)	1.745 (68.7)
Inner Cavity Length [m (in.)]	4.154 (163.5)	4.147 (163.3)
Wall Thickness [m (in.)]	0.379 (14.9)	0.304 (12.0)
Primary Lid Diameter [m (in.)]	1.785 (70.3)	-
Primary Lid Thickness [mm (in.)]	290 (11.4)	-
Secondary Lid Diameter [m (in.)]	2.007 (79.0)	-
Secondary Lid Thickness [mm (in.)]	90 (3.54)	82 (3.22)
Cask Weight, Empty [tonne, (tons)]	84.2 (92.9)	84.2 (92.9)
Cask Weight, Loaded [tonne, (tons)]	105.7 (116.6)	113 (125)
NRC Part 72 Docket	72-1000[b]	72-1018[c]
Facilities Where Used	Surry[d]	Surry[d]

[a] Conditions for Surry ISFSI (from Surry ISFSI Technical Specifications, Feb. 25, 2005 [ML050600021]).
[b] Certificate of Compliance (CoC) No. 72-1000 issued August 17, 1990.
[c] Not currently licensed for general use.
[d] Used at Surry under site-specific license SNM-2501 (NRC Docket 72-2).

V.7.2 Codes and Service Life

The CASTOR V/21 and X/33 casks are designed and manufactured in Germany under applicable German design codes and standards. One of these requirements is that the casks be capable of withstanding the impact of a one-ton missile moving at a velocity of ≈1050 km/h (650 mph), and sample casks are tested using a cannon-fired projectile. The casks are also designed to meet the International Atomic Energy Agency's international specifications (IAEA 2009) for Type B(U) packaging corresponding to Nuclear Safety Fissile Class I. The CoC for the CASTOR V/21 cask further states that it meets the applicable safety standards of 10 CFR 72. The concrete pads are built in accordance with the BOCA Basic Building Code (1981) and applicable American Concrete Institute codes and standards (ACI 318-77 and 1980 Supplement and Commentary, and ACI 315-74) with design compressive strength of 3000 psi after 28 days.

The license renewal application (LRA) for the Surry ISFSI (Virginia Electric and Power Co. 2002) states that the original fatigue analyses for the V/21 and X/33 casks were performed for the cask wall for a 30-year period, consisting of 900 cycles of temperature range of -18°C to 21°C (0°F to 70°F), 150 cycles of temperature range of -18°C to 21°C (0°F to 70°F) with rain and/or snow, and 9900 cycles of temperature range of 10°C to 32°C (50°F to 90°F). The calculated fatigue cumulative usage factors (CUFs) for the two casks were 0.111 and 0.128, respectively. A similarly low CUF of 0.14 was calculated for the X/33 secondary lid bolts. Based in part on these calculations, the initial 20-year operating license for the facility was extended for an additional 40 years in 2006.

V.7.3 Existing Inspection and Monitoring Program

The aging management of the CASTOR V/21 and X/33 casks at the Surry ISFSI relies on the licensee's Dry Storage Cask Inspection Activities Program. This program includes the following activities for the CASTOR V/21 and X/33 casks (Virginia Electric and Power Co. 2002):

1. *Continuous pressure monitoring of the dry storage casks*. The pressure of the cover gas between the primary lid and secondary lid is continuously monitored to detect seal degradation due to corrosion of metallic O-ring seals and other aging effects. Corrosion of the metallic O-ring may result from moisture in the seal area due to exposure to the weather environment. The acceptance criterion for the pressure monitoring activity is the absence of an alarmed condition, as defined in the facilities' Technical Specifications. Alarm panel response procedures specify the required corrective actions and responses. The alarm system is tested annually to ensure proper operation of the system (CoC No. 72-1000).

2. *Quarterly visual inspections of all storage casks*. The condition of the exterior of each dry storage cask is visually inspected quarterly to look for signs of degradation of the dry storage cask surface. Additionally, the inspections identify any debris accumulating on the dry storage cask surfaces that may create the potential for localized conditions to support corrosion. All observations regarding the material condition of the dry storage casks are recorded in inspection procedures. Engineering evaluations assess whether the extent of any observed corrosion could cause a loss of intended function.

3. *Opportunistic visual inspections of the normally inaccessible areas of casks*. These inspections are performed whenever a cask is lifted in preparation for movement or an environmental cover is removed for maintenance. Corrosion of the rear breech plate bolts has occurred in a V/21 cask due to entrapment of water between the cask bottom and the

concrete pad (EPRI 1003010). A visual inspection of the oldest V/21 cask was performed in 2006 prior to the end of the initial operating license to assess the condition of the breech plate bolts and cask bottom. This inspection, defined as License Condition No. 15 of the Surry LRA, will be performed again in ≈20 years.

The TLAAs and AMPs to manage aging effects for the CASTOR V/21 and X/33 spent-fuel storage casks for specific structures and components, materials of construction, and operating environments are given in Tables V.7.A, V.7.B, and V.7.C. In these tables, the dry cask storage system components listed in the "Structure and/or Component" column are classified as "A", "B", or "C" according to importance to safety, as described in Section I.2 above.

V.7.4 References

ACI 315-74, Manual of Standard Practice for Detailing Reinforced Concrete Structures, American Concrete Institute, Detroit, MI, 1974.

ACI 318-77 and 1980 Supplement and Commentary, Building Code Requirements for Reinforced Concrete, American Concrete Institute, Detroit, MI, 1977–1980.

ASME Boiler and Pressure Vessel Code, Section III, Rules for Construction of Nuclear Facility Components, Divisions 1 and 2, American Society of Mechanical Engineers, New York, 2004.

ASTM C295, Standard Guide for Petrographic Examination of Aggregates for Concrete, ASTM International, West Conshohocken, PA, 2012.

ASTM C33-90, Standard Specification for Concrete Aggregates, ASTM International, West Conshohocken, PA, 1990.

Building Officials and Code Administrations International, Inc., BOCA Basic Building Code, 1981.

Certificate of Compliance No. 72-1000 for the CASTOR V/21 Spent Fuel Storage Cask, ML033020117, Nuclear Regulatory Commission, Washington, DC, August 17, 1990.

EPRI 1003010, Dry Cask Storage Characterization Project, Interim Progress Report, October 2001.

EPRI 1021048, Industry Spent Fuel Storage Handbook, Final Report, Electric Power Research Institute, Palo Alto, CA, July 2010.

IAEA, Regulations for the Safe Transport of Radioactive Material, 2009 Edition, Safety Requirements No. TS-R-1, International Atomic Energy Agency, Vienna, 2009.

NUREG-1557, Summary of Technical Information and Agreements from Nuclear Management and Resources Council Industry Reports Addressing License Renewal, Nuclear Regulatory Commission, Washington, DC, October 1996.

NUREG-1927, Standard Review Plan for Renewal of Spent Fuel Dry Cask Storage System Licenses and Certificates of Compliance, Rev. 1, Nuclear Regulatory Commission, Washington, DC, March 2011.

Surry Independent Spent Fuel Storage Installation, Safety Evaluation Report, Docket No. 72-2, License No. SNM-2501, License Renewal, Nuclear Regulatory Commission, Washington, DC, 2005.

Virginia Electric and Power Co., Surry Independent Spent Fuel Storage Installation (ISFSI) License Renewal Application, Docket No. 72-2, April 29, 2002.

Table V.7.A CASTOR Dry Storage Cask: Storage Cask

Item	Structure and/or Component[1]	Intended Function[2]	Material	Environment	Aging Effect/ Mechanism	Aging Management Program (AMP)	Program Type
V.7.A-1	Storage cask external surfaces: Cask body, environmental cover, trunnions (A)	CB, RS, SS, HT, FR	Cast iron; stainless steel	Air – outdoor, marine environment (if applicable) (external); Helium (internal)	Loss of material due to general, pitting, and crevice corrosion	IV.M1, "External Surfaces Monitoring of Mechanical Components"	Generic program
V.7.A-2	Storage cask components under environmental cover: Secondary lid, three port covers or plugs for leaking testing, drying/backfilling, and pressure sensing and associated bolting (A)	CB, RS, SS, HT, FR	Stainless steel	Air – enclosed space, uncontrolled	Loss of material due to general, pitting, and crevice corrosion	Further evaluation is required to establish the extent and frequency of inspection.	Further evaluation to determine whether a site-specific AMP is needed
V.7.A-3	Bolting for primary lid and leaking testing, drying/backfilling, and pressure sensing port covers (A)	SS	Stainless steel	Air – enclosed space, uncontrolled	Cumulative fatigue damage/fatigue	Fatigue is a time-limited aging analysis (TLAA) to be evaluated for the requested period of extended operation. See III.2, "Fatigue of Metal and Concrete Structures and Components," for acceptable methods for meeting the acceptance criteria in Section 3.5.1 of NUREG-1927.	TLAA
V.7.A-4	Neutron moderator rods (A)	RS	Polyethylene neutron-absorbing material	Radiation and elevated temperature in air environment	Degradation of shielding material due to radiation exposure	Degradation of radiation-shielding materials is a TLAA to be evaluated for the requested period of extended operation. See III.5, "Time-Dependent Degradation of Radiation-Shielding Materials," for acceptable methods for meeting the acceptance criteria in Section 3.5.1 of NUREG-1927.	TLAA

Table V.7.A CASTOR Dry Storage Cask: Storage Cask

Item	Structure and/or Component[1]	Intended Function[2]	Material	Environment	Aging Effect/ Mechanism	Aging Management Program (AMP)	Program Type
V.7.A-5	Coatings (C)	SS Not important to safety (ITS)	Epoxy resin on external surfaces; Nickel-base coating on internal surfaces	Air – outdoor, marine environment (if applicable) (external); Helium or enclosed space (internal)	Loss of coating integrity due to blistering, cracking, flaking, peeling, or physical damage	IV.S2, "Protective Coating Monitoring and Maintenance Program"	Generic program
V.7.A-6	Pressure monitoring system: Housing and associated seals and bolts. (B)	Monitor-ing system	Steel, elasto-mers, rubber and similar materials	Air – enclosed space, uncontrolled; or Air - outdoor	Loss of material due to general, pitting, and crevice corrosion	IV.M1, "External Surfaces Monitoring of Mechanical Components"	Generic program
V.7.A-7	Moisture barriers (caulking, sealants) (if applied) (C)	SS Not ITS	Elastomers, rubber and other similar materials	Air – outdoor	Loss of sealing due to wear, damage, erosion, tear, surface cracks, or other defects	IV.M1, "External Surfaces Monitoring of Mechanical Components"	Generic program
V.7.A-8	Lightning protection system (C)	SS Not ITS	Various materials	Air – outdoor	Loss of lightning protection due to wear, tear, damage, surface cracks, or other defects	IV.M1, "External Surfaces Monitoring of Mechanical Components"	Generic program

1 The structures and/or components are classified according to importance to safety, as follows: A = critical to safety operation, B = major impact on safety, and C = minor impact on safety.
2 The important to safety (ITS) functions of the structures and components are as follows: CB = confinement boundary, CC = criticality control, RS = radiation shielding, HT = heat transfer, SS = structural support, and FR = fuel retrievability.

Table V.7.B CASTOR Dry Storage Cask: Internal Contents of the Confinement Vessel

Item	Structure and/or Component[1]	Intended Function[2]	Material	Environment	Aging Effect/ Mechanism	Aging Management Program (AMP)	Program Type
V.7.B-1	Primary lid, cask body, and bottom plate (A)	CB, SS, RS, HT	Cast iron, stainless steel	Limited air (external), Helium (internal)	Cumulative fatigue damage/fatigue	Fatigue is a TLAA to be evaluated for the requested period of extended operation. See III.2, "Fatigue of Metal and Concrete Structures and Components," for acceptable methods for meeting the acceptance criteria in Section 3.5.1 of NUREG-1927.	TLAA
V.7.B-2	Metal and elastomer O-rings: Primary lid and leaking testing, drying and backfilling, and pressure sensing port closures (A)	CB	Stainless steel, nickel-base coating on sealing surface	Air – enclosed space, uncontrolled (external), Helium (internal)	Loss of sealing forces due to stress relaxation and creep of the metallic O-rings, corrosion and loss of preload of the closure bolts	IV.M4, "Bolted Cask Seal and Leakage Monitoring Program"	Generic program
V.7.B-3	Fuel basket assembly: Stainless steel plates, neutron absorber plates, drainage guide pipe (A)	CC, SS, HT, RS, FR	Stainless steel, borated neutron-absorbing plates	Helium, radiation, and elevated temperature	Degradation of heat transfer, radiation shield, criticality control, or structural support function due to extended exposure to high temperature and radiation	IV.M5, "Canister/Cask Internals Structural and Functional Integrity Monitoring Program" Degradation of neutron-absorbing materials is a TLAA to be evaluated for the requested period of extended operation. See III.4, "Time-Dependent Degradation of Neutron-Absorbing Materials," for acceptable methods for meeting the acceptance criteria in Section 3.5.1 of NUREG-1927.	Generic program TLAA

1 The structures and/or components are classified according to importance to safety, as follows: A = critical to safety operation, B = major impact on safety, and C = minor impact on safety.
2 The important to safety (ITS) functions of the structures and components are as follows: CB = confinement boundary, CC = criticality control, RS = radiation shielding, HT = heat transfer, SS = structural support, and FR = fuel retrievability.

Table V.7.C CASTOR Dry Storage Cask: Basemat (Pad) and Approach Slab (Ramp)

Item	Structure and/or Component[1]	Intended Function[2]	Material	Environment	Aging Effect/ Mechanism	Aging Management Program (AMP)	Program Type
V.7.C-1	Concrete: Basemat (pad) and approach slab (ramp) (above-grade) (B)	SS	Reinforced Concrete	Air – outdoor	Cracking due to expansion from reaction with aggregates; Increase in porosity/permeability, cracking, or loss of material (spalling, scaling) due to aggressive chemical attack; Cracking and loss of material (spalling, scaling) due to freeze-thaw; Cracking, loss of bond, and loss of material (spalling, scaling) due to corrosion of embedded steel; Increase in porosity and permeability or loss of strength due to leaching of calcium hydroxide and carbonation; Cracking and distortion due to increased stress level from settlement.	IV.S1, "Concrete Structures Monitoring Program" Note: Further evaluation may be required to manage all of these aging effects/mechanisms for the below grade or inaccessible areas of the basemat and approach ramp (See line items V.7.C-2 to -7 for details)	Generic program

Table V.7.C CASTOR Dry Storage Cask: Basemat (Pad) and Approach Slab (Ramp)

Item	Structure and/or Component[1]	Intended Function[2]	Material	Environment	Aging Effect/ Mechanism	Aging Management Program (AMP)	Program Type
V.7.C-2	Concrete: Basemat (pad) and approach slab (ramp) (above-grade) (B)	SS	Reinforced concrete	Groundwater/ soil	Cracking; loss of bond; and loss of material (spalling, scaling) due to corrosion of embedded steel	For facilities with non-aggressive groundwater/soil, i.e., pH >5.5, chlorides <500 ppm, and sulfates <1500 ppm, as a minimum, consider (1) examination of the exposed portions of the below-grade concrete, when excavated for any reason, and (2) periodic monitoring of below-grade water chemistry, including consideration of potential seasonal variations. For facilities with aggressive groundwater/soil (i.e., pH <5.5, chlorides >500 ppm, or sulfates >1500 ppm), and/or where the concrete structural elements have experienced degradation, a site-specific AMP accounting for the extent of the degradation experienced should be implemented to manage the concrete aging during the requested period of extended operation.	Further evaluation to determine whether a site-specific AMP is needed
V.7.C-3	Concrete: Basemat (pad) and approach slab (ramp) (below-grade) (B)	SS	Reinforced concrete	Any environment	Cracking due to expansion from reaction with aggregates	Further evaluation is required to determine if a site-specific AMP is needed to manage cracking and expansion due to reaction of concrete with aggregate in inaccessible areas. A site-specific AMP is not required if (1) as described in NUREG-1557 investigations, tests, and petrographic examinations of aggregates per ASTM C295 and other ASTM reactivity tests, as required, can demonstrate that those aggregates do not adversely react within concrete, or (2) for potentially reactive aggregates, it is demonstrated that the in-place concrete can perform its intended function.	Further evaluation to determine whether a site-specific AMP is needed

Table V.7.C CASTOR Dry Storage Cask: Basemat (Pad) and Approach Slab (Ramp)

Item	Structure and/or Component[1]	Intended Function[2]	Material	Environment	Aging Effect/ Mechanism	Aging Management Program (AMP)	Program Type
V.7.C-4	Concrete: Basemat (pad) and approach slab (ramp) (below-grade) (B)	SS	Reinforced concrete	Groundwater/ soil	Loss of material (spalling, scaling) and cracking due to freeze-thaw	Further evaluation is required for facilities that are located in moderate to severe weathering conditions (weathering index >100 day-inch/yr) (NUREG-1557) to determine if a site-specific AMP is needed. A site-specific AMP is not required if documented evidence confirms that the existing concrete had air entrainment content (as per Table CC-2231-2 of the ASME Code, Section III Division 2), and subsequent inspections of accessible areas did not exhibit degradation related to freeze-thaw. Such inspections should be considered a part of the evaluation. If this condition is not satisfied, then a site-specific AMP is required to manage loss of material (spalling, scaling) and cracking due to freeze-thaw of concrete in inaccessible areas. The weathering index for the continental United States is shown in ASTM C33-90, Fig. 1.	Further evaluation to determine whether a site-specific AMP is needed
V.7.C-5	Concrete (inaccessible areas): Basemat (pad) and approach slab (ramp) (B)	SS	Reinforced concrete	Groundwater/ soil	Increase in porosity and permeability; cracking; loss of material (spalling, scaling) due to aggressive chemical attack	For facilities with non-aggressive groundwater/soil, i.e., pH >5.5, chlorides <500 ppm, or sulfates <1500 ppm, as a minimum, consider (1) examination of the exposed portions of the below-grade concrete, when excavated for any reason, and (2) periodic monitoring of below-grade water chemistry, including consideration of potential seasonal variations. For facilities with aggressive groundwater/soil (i.e., pH <5.5, chlorides >500 ppm, or sulfates >1500 ppm), and/or where the concrete structural elements have experienced degradation, a site-specific AMP accounting for the extent of the degradation experienced should be implemented to manage the concrete aging during the requested period of extended operation.	Further evaluation to determine whether a site-specific AMP is needed

Table V.7.C CASTOR Dry Storage Cask: Basemat (Pad) and Approach Slab (Ramp)

Item	Structure and/or Component[1]	Intended Function[2]	Material	Environment	Aging Effect/ Mechanism	Aging Management Program (AMP)	Program Type
V.7.C-6	Concrete (inaccessible areas): Exterior below-grade; basemat (concrete pad) and approach slab (ramp) (B)	SS	Reinforced concrete	Groundwater/ soil	Increase in porosity and permeability; loss of strength due to leaching of calcium hydroxide and carbonation	Further evaluation is required to determine if a site-specific AMP is needed to manage increase in porosity and permeability due to leaching of calcium hydroxide and carbonation of concrete in inaccessible areas. A site-specific AMP is not required if (1) there is evidence in the accessible areas that the flowing water has not caused leaching and carbonation, or (2) evaluation determines that the observed leaching of calcium hydroxide and carbonation in accessible areas has no impact on the intended function of the concrete structure.	Further evaluation to determine whether a site-specific AMP is needed
V.7.C-7	Concrete: Basemat (pad) and approach slab (ramp) (B)	SS	Reinforced concrete	Air – outdoor; Groundwater/ soil	Reduction of strength, cracking due to differential settlement, and erosion of porous concrete sub-foundation	Further evaluation is required to determine if a site-specific AMP is needed, if a de-watering or any other system is relied upon for control of settlement, to ensure proper functioning of that system through the requested period of extended operation.	Further evaluation to determine whether a site-specific AMP is needed

1 The structures and/or components are classified according to importance to safety, as follows: A = critical to safety operation, B = major impact on safety, and C = minor impact on safety.
2 The important to safety (ITS) functions of the structures and components are as follows: CB = confinement boundary, CC = criticality control, RS = radiation shielding, HT = heat transfer, SS = structural support, and FR = fuel retrievability.

V.8 W150 FuelSolutions Storage System

V.8.1 System Description

The principal components of the BNFL FuelSolutions Storage System are the W21 and W74 canisters as shown in Fig. V.8-1 and Fig. V.8-2, respectively, the W150 concrete storage cask (i.e, overpack) as shown in Fig. V.8-3, and the W100 transfer cask. The W21 canister stores up to 21 pressurized water reactor (PWR) fuel assemblies, and the W74 canister stores up to 64 boiling water reactor (BWR) fuel assemblies. The W150 overpack is a precast reinforced concrete structure. PWR fuel assemblies with burnup levels greater than 60,000 MWD/MTU and BWR assemblies with burnup levels greater than 40,000 MWD/MTU are not allowed in the BNFL FuelSolutions Storage System. The system was certified on February 15, 2001 (CoC No. 72-1026). Currently, there are eight (8) casks (W74 canister) at the Big Rock Point plant, which was shut down in August 1997.

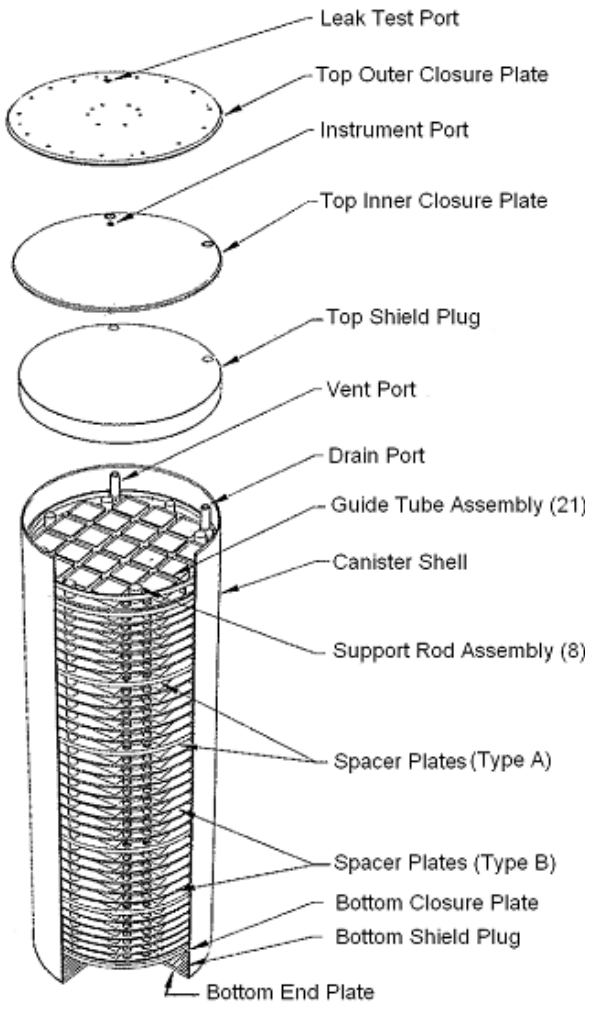

Figure V.8-1: FuelSolutions Storage System W21 canister (Safety Evaluation Report, 2001).

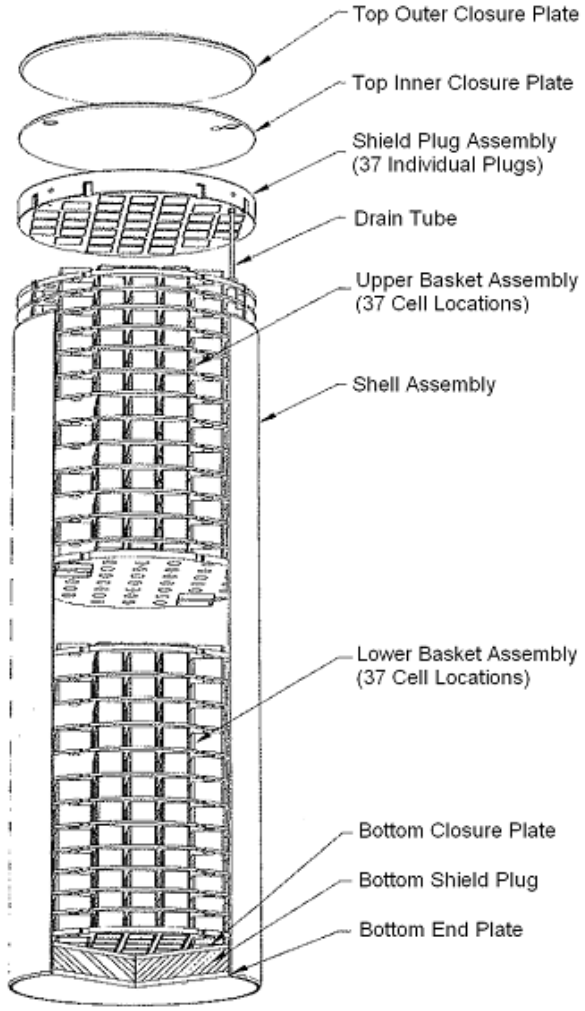

Figure V.8-2: FuelSolutions Storage System W74 canister (Safety Evaluation Report, 2001).

V.8.1.1 Multi-Assembly Sealed Basket

A typical W21 or W74 canister consists of a shell assembly, top and bottom inner closure plates, vent and drain port covers, internal basket assembly, top and bottom shield plugs, and top and bottom outer closure plates. All structural components of the canister are constructed of high-strength carbon or stainless steel. Any carbon steel used in the canister is coated with electroless nickel for corrosion protection.

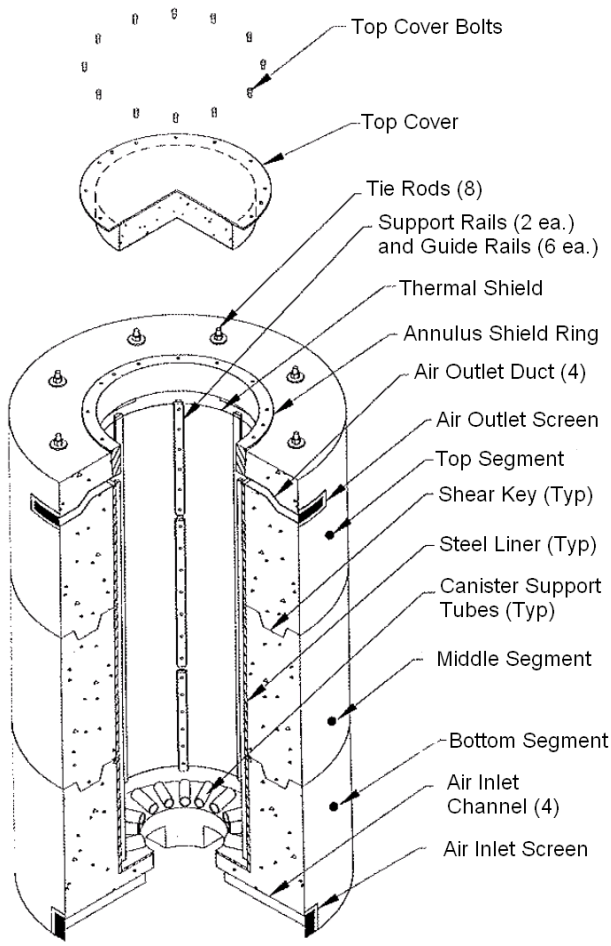

Figure V.8-3: FuelSolutions Storage System W150 overpack (LAR 1026-004, Rev. 0, 2005).

Fuel Basket: The fuel basket of the W21 canister as shown in Fig. V.8-1 consists of an array of guide tubes, Boral neutron absorber plates, support rods, and spacer plates. There are two canister basket and shell assembly types, designated W21M and W21T, which differ with respect to the materials used for the support rods, vent and drain port covers, outer closure plates, inner closure plates, cylindrical shell, and spacer plates. The W21 canister basket assembly contains borated aluminum neutron absorber sheets (Boral) and a thin outer wrapper. The Boral panels are sealed between the inner structural tube and the outer wrapper.

The confinement boundary of the W21 and W74 canisters includes the canister cylindrical shell, the bottom-end closure plate, the top-end inner and outer closure plates, and the vent, drain, instrument, and leak test ports with their associated covers. They are designed, fabricated, and

tested in accordance with the applicable requirements of ASME Code, Section III, Subsection NB. The canister is sealed using redundant closure welds, one at the outer top closure plate and the second at the inner top closure plate. The inner closure plate is welded to the canister shell and the vent and drain port bodies. The vent and drain port cover plates are welded to the vent and drain port bodies. The outer closure plate is welded to the canister shell. The canister cylinder shell seam welds are full-penetration groove welds. The canister has no bolted closures or mechanical seals.

The fuel basket of the W74 canister, as shown in Fig. V.8-2, consists of two right circular cylindrical baskets, with a total of 56 guide tubes with a capacity of up to 64 assemblies. The ten unfueled guide tube positions, five in the center of each half-basket assembly, are mechanically blocked to prevent fuel assemblies from being loaded in these positions. The guide tubes are supported by a series of 19-mm (0.75-in.)-thick spacer plates, held in position by support rods that run through support rod sleeves placed between the spacer plates. The square guide tubes include neutron poison sheets (borated stainless steel), either on one side or on two opposite sides, in an arrangement within the basket that ensures that there is a poison sheet between all adjacent assemblies. The W74 canister has two classes of canister, W74M and W74T, differing in materials of construction used for the canister shell and basket assembly. Each canister class has only a long steel design.

V.8.1.2 W150 Overpack

The W150 overpack, as shown in Fig.V.8-3, consists of a standard reinforced concrete structure with three precast segments (top, middle, and bottom segments) and a top cover made of steel and concrete. Inside the cavity of the overpack are a 51-mm (2 in.)-thick carbon steel liner, an aluminum thermal shield, carbon steel support and guide rails, and stainless steel canister support tubes. All carbon steel components, such as the liner, top cover, and support and guide rails, are coated with temperature- and radiation-resistant coatings. The exterior surfaces of the concrete are exposed to the outdoor environment and are coated with a weather-resistant protective coating. Grout is installed between the keyed joints of the segments to provide a weather barrier between the segments. The overpack segment construction allows the overpack to be disassembled for decommissioning or for re-use at other Independent Spent Fuel Storage Installation sites.

The overpack is designed for storing both the long and short version of the W21 and W74 canisters by varying the length of the middle overpack segment. The long version of the overpack is 5.82 m (230 in.) high, and the short version is 5.58 m (220 in.) high. Both versions have an outside diameter of 3.5 m (138 in.) and an inside diameter of 1.85 m (73 in.). The concrete segment wall thickness of 0.82 m (32.5 in.) includes a 5.05-cm (2.0-in.)-thick carbon steel liner in the interior of the cavity. The steel liner, the concrete wall, and the concrete encased in the top cover provide shielding for the canister. Eight (8) high-strength, full-length tie rods are used to tie the three overpack concrete segments together. A shear key between each two concrete segments provides positive lateral engagement and alignment and serves to minimize radiation streaming. The tie rods are inserted through oversized pipe sleeves cast into the concrete segments and tensioned to provide a specified pre-load to ensure that the overpack concrete segments are joined together as a unit when subjected to the full range of design basis loadings.

The top cover of the overpack is bolted to the overpack top end segment shielding ring and is sealed with weather sealant. It has a thickness of 36 cm (14.3 in.) and is constructed using a steel plate with encased concrete for shielding. The top cover steel plate has a diameter of 2 m (78.5 in.), and the

concrete in the top cover has a diameter of 1.67 m (66.0 in.). The top cover assembly provides axial neutron and gamma shielding. Inside the cavity, eight (8) guide rails are welded to the steel liner every 45° for centering the canister radially in the cavity. Two of the guide rails also serve as support rails, providing a sliding surface for the canister during horizontal transfer. Eight (8) aluminum heat shield panels positioned between the guide rails are provided to minimize the overpack concrete temperature. The heat shield panels are secured radially and circumferentially by heat shield retainer plates on the guide rails. Sixteen (16) stainless steel canister support tubes are welded to the bottom plate of the steel liner plate to provide vertical support of the canister and to limit the g-load on the canister in a postulated accident.

The overpack concrete bottom segment includes four inlet vents that converge into a single cylindrical inlet duct at the bottom center of the cask cavity. The center inlet duct also provides hydraulic ram access during horizontal canister transfer operations. The inlet vent openings allow air to flow upward through the inner annulus between the canister shell and the thermal shield and through the outer annulus between the thermal shield and the steel liner. The aluminum thermal shield radiates heat back to the flow annulus to reduce heat transfer to the steel liner and the concrete wall. The inlet and outlet vents have protective screens to prevent debris or wildlife from entering the ventilation ducts.

Two thermocouples are located at mid-height of the overpack for monitoring the temperature of the overpack concrete. One thermocouple is located on the outside surface of the steel liner and the other at mid-thickness of the concrete wall. A terminal box with a hand-held digital temperature readout and recording instrument is provided. The thermocouples are monitored daily, as required by the technical specification, to ensure that the maximum short-term allowable surface concrete temperature, 176.7°C (350°F), is not exceeded and to verify the system performance.

An overpack impact limiter is provided as an energy-absorbing pad to mitigate impact loads on the overpack and canister in a postulated tip-over accident. The impact limiter [10 ft (3 m) wide by 30 ft (9 m) long by 2 ft (0.6 m) thick] contains polyurethane foam (LAST-A-FORM FR-3700 rigid polyurethane foam) that is encased with light-gauge sheet or thin-plate carbon steel with a protective coating for corrosion protection. Following completion of storage cask loading or unloading operations, the impact limiter is removed and placed in a storage area where it is protected from degradation due to exposure to the environment.

V.8.2 Codes and Service Life

The canister components, including the canister cylindrical shell, the bottom-end closure plate, the top-end inner and outer closure plates, and the vent, drain, instrument, and leak test ports with their associated covers, are designed, fabricated, and tested in accordance with the applicable requirements of ASME Code, Section III, Subsection NB. The overpack reinforced concrete is designed in accordance with ACI 349-90 and fabricated in accordance with ACI 318-89. The overpack structural steel is designed in accordance with ANSI/AISC N690-1984. The W150 overpack is designed for 100 years of service and for a design basis earthquake of 0.25 g in the horizontal and vertical directions. The reinforced concrete pad is designed and constructed in accordance with ACI 318-89. The allowable temperatures for the overpack reinforced concrete are in accordance with ACI 349-90, which limits the bulk average concrete temperature to 65.6°C (150°F), the maximum local concrete temperature to 93°C (200°F) for normal conditions, and the maximum concrete surface temperature for off-normal and accident (short-term) conditions to 177°C (350°F).

The overpack accommodates any FuelSolutions canister with a total heat load of 28.0 kW or less. Thermal analyses assume that the overpacks are placed in an array at a minimum distance of 4.6 m (15 ft, center-to-center) apart. The requirement of minimum spacing 4.6 m (15 ft, center-to-center) is in the plant technical specification.

V.8.3 Existing Inspection and Monitoring Program

The FuelSolutions Storage System Final Safety Analysis Report (BNFL 2005) specifies the following Inspection and Monitoring Programs:

- The temperature-monitoring instrumentation is to be checked to ensure that the maximum short-term allowable surface concrete temperature 177°C (350°F) is not exceeded and to allow prompt identification and correction actions.
- The storage cask temperature-monitoring instrumentation is to be checked for proper operation and calibrated at least annually.
- A daily surveillance is to be done for inspection of the air inlet and outlet vent screens to verify that the screens have not been damaged and appear to be clear of external debris.
- An annual inspection of the exposed exterior of the overpack for surface defects (e.g., concrete cracking, spalling, or paint chipping) should be conducted.
- Every five years, the interior surface of the first overpack placed into service is to be inspected for damage and defects. Inspections may be by direct or indirect visual methods. Any defects identified are to be evaluated and repaired.
- The impact limiter is to be visually inspected annually.

The TLAAs and AMPs to manage aging effects for specific structures and components, materials of construction, and environments of the FuelSolutions Storage System are given in Tables V.8.A, V.8.B, and V.8.C. In these tables, the dry cask storage system components listed in the “Structure and/or Component” column are classified as “A”, “B”, or “C” according to importance to safety, as described in Section I.2.

V.8.4 References

10 CFR Part 72, Licensing Requirements for the Independent Storage of Spent Nuclear Fuel, High-Level Radioactive Waste, and Reactor Related Greater than Class C Waste, Nuclear Regulatory Commission, 1-1-12 Edition, 2012.

ACI 318-89, Building Code Requirements for Reinforced Concrete, American Concrete Institute, Farmington Hills, MI, 1989.

ACI 349-90, Code Requirements for Nuclear Related Concrete Structures and Commentary, American Concrete Institute, Farmington Hills, MI, 1990.

ANSI/AISC N690-1984, Nuclear Facilities Steel Safety-Related Structures for Design Fabrication and Erection, American Institute of Steel Construction, Inc., Chicago, 1984.

ASME Boiler and Pressure Vessel Code, Section III, Rules for Construction of Nuclear Facility Components, Divisions 1 and 2, American Society of Mechanical Engineers, New York, 2004.

ASME Boiler and Pressure Vessel Code, Section XI Subsection IWL, Requirements for Class CC Concrete Components of Light-Water Cooled Plants, American Society of Mechanical Engineers, New York, 2004.

ASTM C295, Standard Guide for Petrographic Examination of Aggregates for Concrete, ASTM International, West Conshohocken, PA, 2012.

ASTM C33-90, Standard Specification for Concrete Aggregates, ASTM International, West Conshohocken, PA, 1990.

BNFL, FuelSolutions Storage System Final Safety Analysis Report, Rev. 2, BNFL Fuel Solutions Corporation, Campbell, CA, April 2005.

Certificate of Compliance No. 72-1026 for FuelSolutions Storage System, ML003762509, Nuclear Regulatory Commission, Washington, DC, 2005.

NRC, FuelSolutions Storage System Safety Evaluation Report, Docket No. 72-1026, Certificate of Compliance No. 1026, Nuclear Regulatory Commission, Washington, DC, 2005.

Jana, D., and Tepke, D., Corrosion of Aluminum Metal in Concrete – A Case Study, Proceedings of the 32nd Conference on Cement Microscopy, ICMA, New Orleans, Louisiana, March, 2010. Retrieved from http://www.cmc-concrete.com/ publication link on February 28, 2013.

LAR 1026-004, Rev. 0, FuelSolutions Storage System License Amendment Request, BNG Fuel Solutions Corporation, Campbell, CA, June 2005.

NUREG-1557, Summary of Technical Information and Agreements from Nuclear Management and Resources Council Industry Reports Addressing License Renewal, Nuclear Regulatory Commission, Washington, DC, October 1996.

NUREG-1927, Standard Review Plan for Renewal of Spent Fuel Dry Cask Storage System Licenses and Certificates of Compliance, Rev. 1, Nuclear Regulatory Commission, Washington, DC, March 2011.

Safety Evaluation Report Docket No. 72-1026 FuelSolutions Storage System Certificate of Compliance No. 72-1026, Nuclear Regulatory Commission, Washington DC, Jan. 29, 2001.

Table V.8.A W150 FuelSolutions Storage System: Concrete Overpack

Item	Structure and/or Component[1]	Intended Function[2]	Material	Environment	Aging Effect/ Mechanism	Aging Management Program (AMP)	Program Type
V.8.A-1	Concrete overpack (accessible areas): Top, middle, and bottom segments (A)	RS, SS, HT	Reinforced concrete	Air – outdoor, marine environment (if applicable) (external)	Cracking due to expansion from reaction with aggregates; Increase in porosity/permeability, cracking, or loss of material (spalling, scaling) due to aggressive chemical attack; Loss of material (spalling, scaling) and cracking due to freeze-thaw; Cracking, loss of bond, and loss of material (spalling, scaling) due to corrosion of embedded steel; Increase in porosity and permeability or loss of strength due to leaching of calcium hydroxide and carbonation; Loss of strength due to concrete interaction with aluminum	IV.S1, "Concrete Structures Monitoring Program" Note: Further evaluation may be required for the following aging effects/mechanisms: • Loss of material (spalling, scaling) and cracking due to freeze-thaw; • Cracking due to expansion from reaction with aggregates; • Loss of strength due to concrete interaction with aluminum (Jana 2013); • Reduction of strength and degradation of shielding performance of concrete due to elevated temperature (>150°F general, >200°F local) and long-term exposure to gamma radiation. (See line items V.8.A-2 to -4 for details)	Generic program

Table V.8.A W150 FuelSolutions Storage System: Concrete Overpack

Item	Structure and/or Component[1]	Intended Function[2]	Material	Environment	Aging Effect/ Mechanism	Aging Management Program (AMP)	Program Type
V.8.A-2	Concrete overpack: Top, middle, and bottom segments (A)	RS, SS, HT	Reinforced concrete	Air – outdoor, marine environment (if applicable) (external)	Loss of material (spalling, scaling) and cracking due to freeze-thaw	Further evaluation is required for facilities that are located in moderate to severe weathering conditions (weathering index >100 day-inch/yr) (NUREG-1557) to determine if a site-specific AMP is needed. A site-specific AMP is not required if documented evidence confirms that the existing concrete had air entrainment content (as per Table CC-2231-2 of the ASME Code, Section III Division 2), and subsequent inspections of accessible areas did not reveal degradation related to freeze-thaw. Such inspections should be considered a part of the evaluation. If this condition is not satisfied, then a site-specific AMP is required to manage loss of material (spalling, scaling) and cracking due to freeze-thaw of concrete in inaccessible areas. The weathering index for the continental United States is shown in ASTM C33-90, Fig. 1.	Further evaluation to determine whether a site-specific AMP is needed
V.8.A-3	Storage overpack (inaccessible areas): Overpack concrete radiation shield, pedestal shield, and overpack lid shield (A)	RS, SS	Reinforced or plain concrete	Air – outdoor, marine environment (if applicable) (external)	Cracking due to expansion from reaction with aggregate	Further evaluation is required to determine if a site-specific AMP is needed to manage cracking and expansion due to reaction of concrete with aggregate in inaccessible areas. A site-specific AMP is not required if (1) as described in NUREG-1557, investigations, tests, and petrographic examinations of aggregates performed in accordance with ASTM C295 and other ASTM reactivity tests, as required, can demonstrate that those aggregates do not adversely react within concrete, or (2) for potentially reactive aggregates, aggregate-concrete reaction is not significant.	Further evaluation to determine whether a site-specific AMP is needed

Table V.8.A W150 FuelSolutions Storage System: Concrete Overpack

Item	Structure and/or Component[1]	Intended Function[2]	Material	Environment	Aging Effect/ Mechanism	Aging Management Program (AMP)	Program Type
V.8.A-4	Concrete overpack: Top, middle, and bottom segments (A)	RS, SS, HT	Reinforced concrete	Air – outdoor, marine environment (if applicable) (external)	Reduction of strength and degradation of shielding performance of concrete due to elevated temperature (>150°F general, >200°F local) and long-term exposure to gamma radiation	The compressive strength and shielding performance of plain concrete is maintained by ensuring that the minimum concrete density is achieved during construction and the allowable concrete temperature and radiation limits are not exceeded. The implementation of 10 CFR 72 requirements and ASME Section XI, Subsection IWL, would not enable identification of the reduction of strength due to elevated temperature and gamma radiation. Thus, for any portions of concrete that exceed specified limits for temperature and gamma radiation, further evaluations are warranted. For normal operation or requested period of extended operation, Subsection CC-3400 of ASME Section III, Division 2, specifies that the concrete temperature limits shall not exceed 66°C (150°F) except for local areas, such as around penetrations, which are not allowed to exceed 93°C (200°F). Also, a gamma radiation dose of 10^{10} rads may cause significant reduction of strength. If significant equipment loads are supported by concrete exposed to temperatures exceeding 66°C (150°F) and/or gamma dose above 10^{10} rads, an evaluation is to be made of the ability to withstand the postulated design loads. Higher temperatures than given above may be allowed in the concrete if tests and/or calculations are provided to evaluate the reduction in strength and modulus of elasticity and these reductions are applied to the design calculations.	Further evaluation to determine whether a site-specific AMP is needed

Table V.8.A W150 FuelSolutions Storage System: Concrete Overpack

Item	Structure and/or Component[1]	Intended Function[2]	Material	Environment	Aging Effect/ Mechanism	Aging Management Program (AMP)	Program Type
V.8.A-5	Storage overpack (external surfaces): Top cover and bolting, tie rods and nuts, air inlet and outlet ducts and screens, lifting lugs (A or B)	SS, HT, RS, FR	Carbon or low-alloy steel	Air – outdoor, marine environment (if applicable)	Loss of material due to general corrosion, pitting, crevice corrosion	IV.M1,"External Surfaces Monitoring of Mechanical Components"	Generic program
V.8.A-6	Storage overpack (inaccessible areas): Annulus shield ring, thermal shield, support and guide rails, steel liner, canister support tubes, (A or B)	SS, HT, RS, FR	Carbon or low-alloy steel, aluminum	Air – outdoor, marine environment (if applicable)	Loss of material due to general corrosion, pitting, crevice corrosion	Further evaluation is required to establish the extent and frequency of inspection.	Further evaluation to determine whether a site-specific AMP is needed
V.8.A-7	Ventilation air openings: Air ducts and screens (A)	HT	Carbon or low-alloy steel	Air – inside the overpack, uncontrolled; or Air – outdoor	Reduced heat convection capacity due to blockage	IV.M2, "Ventilation Surveillance Program."	Generic program
V.8.A-8	Moisture barriers (caulking, sealants, and expansion joint fillers) (C)	SS Not important to safety (ITS)	Elastomers, rubber and other similar materials	Air – outdoor	Loss of sealing due to wear, damage, erosion, tear, surface cracks, or other defects	IV.M1, "External Surfaces Monitoring of Mechanical Components"	Generic program
V.8.A-9	Coatings (if applied) on metallic components (C)	SS Not ITS	Coating	Air – inside the overpack, uncontrolled, or Air – outdoor	Loss of coating integrity due to blistering, cracking, flaking, peeling, or physical damage	IV.S2, "Protective Coating Monitoring and Maintenance Program"	Generic program

Table V.8.A W150 FuelSolutions Storage System: Concrete Overpack

Item	Structure and/or Component[1]	Intended Function[2]	Material	Environment	Aging Effect/ Mechanism	Aging Management Program (AMP)	Program Type
V.8.A-10	Lightning protection system (if applicable) (C)	SS Not ITS	Various materials	Air – outdoor	Loss of lightning protection due to wear, tear, damage, surface cracks, or other defects	IV.M1, "External Surfaces Monitoring of Mechanical Components"	Generic program
V.8.A-11	Cathodic protection systems (B)	Cathodic protection of rein-forcing steel	Various materials	Air – outdoor; Embedded in concrete	Reduction of cathodic protection effect on bond strength due to degradation of cathodic protection current	IV.S1, "Concrete Structures Monitoring Program"	Generic program

1. The structures and/or components are classified according to importance to safety, as follows: A = critical to safety operation, B = major impact on safety, and C = minor impact on safety.
2. The important to safety (ITS) functions of the structures and components are as follows: CB = confinement boundary, CC = criticality control, RS = radiation shielding, HT = heat transfer, SS = structural support, and FR = fuel retrievability.

Table V.8.B W150 FuelSolutions Storage System: W21/W74 Canisters

Item	Structure and/or Component[1]	Intended Function[2]	Material	Environment	Aging Effect/ Mechanism	Aging Management Program (AMP)	Program Type
V.8.B-1	Confinement vessel: Baseplate, shell, shield lid, port covers, closure ring, bottom plate, and associated welds (A)	CB, CC, HT, SS, FR	Stainless steel	Air – inside the overpack, uncontrolled (external); Helium (internal)	Cumulative fatigue damage due to cyclic loading	Fatigue is a TLAA to be evaluated for the requested period of extended operation. See III.2, "Fatigue of Metal and Concrete Structures and Components," for acceptable methods for meeting the acceptance criteria in Section 3.5.1 of NUREG-1927.	TLAA
V.8.B-2	Confinement vessel: Baseplate, shell, shield lid, port covers, closure ring, bottom plate, and associated welds. (A)	CB, CC, HT, SS, FR	Stainless steel	Air – inside the overpack, uncontrolled (external)	Cracking and leakage due to stress corrosion cracking when exposed to moisture and aggressive chemicals in the environment	IV.M1, "External Surfaces Monitoring of Mechanical Components" IV.M3, "Welded Canister Seal and Leakage Monitoring Program"	Generic program
V.8.B-3	Fuel basket: Guide tubes, stainless steel plates, support rods, spacer plates, drain pipe, borated stainless steel/boral panels (A)	CC, CB, HT, SS, FR	Stainless steel, borated stainless steel	Helium, radiation, and elevated temperatures	Degradation of heat transfer, criticality control, radiation shield, or structural support functions of the confinement vessel internals due to extended exposure to high temperature and radiation.	IV.M5, "Canister/Cask Internals Structural and Functional Integrity Monitoring Program" Degradation of neutron-absorbing materials is a TLAA to be evaluated for the requested period of extended operation. See III.4, "Time-Dependent Degradation of Neutron-Absorbing Materials," for acceptable methods for meeting the acceptance criteria in Section 3.5.1 of NUREG-1927.	Generic program TLAA

1. The structures and/or components are classified according to importance to safety, as follows: A = critical to safety operation, B = major impact on safety, and C = minor impact on safety.
2. The important to safety (ITS) functions of the structures and components are as follows: CB = confinement boundary, CC = criticality control, RS = radiation shielding, HT = heat transfer, SS = structural support, and FR = fuel retrievability.

Table V.8.C W150 FuelSolutions Storage System: Basemat (Pad) and Approach Slab (Ramp)

Item	Structure and/or Component[1]	Intended Function[2]	Material	Environment	Aging Effect/ Mechanism	Aging Management Program (AMP)	Program Type
V.8.C-1	Concrete: Basemat (pad) and approach slab (ramp) (above-grade) (B)	SS	Reinforced concrete	Air – outdoor	Cracking due to expansion from reaction with aggregates; Increase in porosity/permeability, cracking, or loss of material (spalling, scaling) due to aggressive chemical attack; Cracking and loss of material (spalling, scaling) due to freeze-thaw; Cracking, loss of bond, and loss of material (spalling, scaling) due to corrosion of embedded steel; Increase in porosity and permeability or loss of strength due to leaching of calcium hydroxide and carbonation; Cracking and distortion due to increased stress level from settlement.	IV.S1, "Concrete Structures Monitoring Program" Note: Further evaluation may be required to manage all of these aging effects/mechanisms for the below grade or inaccessible areas of the basemat and approach ramp (See line items V.8.C-2 to -7 for details)	Generic program

Table V.8.C W150 FuelSolutions Storage System: Basemat (Pad) and Approach Slab (Ramp)

Item	Structure and/or Component[1]	Intended Function[2]	Material	Environment	Aging Effect/ Mechanism	Aging Management Program (AMP)	Program Type
V.8.C-2	Concrete: Basemat (pad) and approach slab (ramp) (below-grade) (B)	SS	Reinforced concrete	Groundwater/ soil	Cracking; loss of bond; and loss of material (spalling, scaling) due to corrosion of embedded steel	For facilities with non-aggressive groundwater/soil, i.e., pH >5.5, chlorides <500 ppm, and sulfates <1500 ppm, as a minimum, consider (1) examination of the exposed portions of the below-grade concrete, when excavated for any reason, and (2) periodic monitoring of below-grade water chemistry, including consideration of potential seasonal variations. For facilities with aggressive groundwater/soil (i.e., pH <5.5, chlorides >500 ppm, or sulfates >1500 ppm), and/or where the concrete structural elements have experienced degradation, a site-specific AMP accounting for the extent of the degradation experienced should be implemented to manage the concrete aging during the period of extended operation.	Further evaluation to determine whether a site-specific AMP is needed
V.8.C-3	Concrete: Basemat (pad) and approach slab (ramp) (below-grade) (B)	SS	Reinforced concrete	Groundwater/ soil	Cracking due to expansion from reaction with aggregates	Further evaluation is required to determine if a site-specific AMP is needed to manage cracking and expansion due to reaction of concrete with aggregate in inaccessible areas. A site-specific AMP is not required if (1) as described in NUREG-1557, investigations, tests, and petrographic examinations of aggregates per ASTM C295 and other ASTM reactivity tests, as required, can demonstrate that those aggregates do not adversely react within concrete, or (2) for potentially reactive aggregates, it is demonstrated that the in-place concrete can perform its intended function.	Further evaluation to determine whether a site-specific AMP is needed

Table V.8.C W150 FuelSolutions Storage System: Basemat (Pad) and Approach Slab (Ramp)

Item	Structure and/or Component[1]	Intended Function[2]	Material	Environment	Aging Effect/ Mechanism	Aging Management Program (AMP)	Program Type
V.8.C-4	Concrete: Basemat (pad) and approach slab (ramp) (below-grade) (B)	SS	Reinforced concrete	Groundwater/ soil	Loss of material (spalling, scaling) and cracking due to freeze-thaw	Further evaluation is required for facilities that are located in moderate to severe weathering conditions (weathering index >100 day-inch/yr) (NUREG-1557) to determine if a site-specific AMP is needed. A site-specific AMP is not required if documented evidence confirms that the existing concrete had air entrainment content (as per Table CC-2231-2 of the ASME Code, Section III Division 2), and subsequent inspections of accessible areas did not exhibit degradation related to freeze-thaw. Such inspections should be considered a part of the evaluation. If this condition is not satisfied, then a site-specific AMP is required to manage loss of material (spalling, scaling) and cracking due to freeze-thaw of concrete in inaccessible areas. The weathering index for the continental United States is shown in ASTM C33-90, Fig. 1.	Further evaluation to determine whether a site-specific AMP is needed
V.8.C-5	Concrete (inaccessible areas): Basemat (pad) and approach slab (ramp) (B)	SS	Reinforced concrete	Groundwater/ soil	Increase in porosity and permeability; cracking; loss of material (spalling, scaling) due to aggressive chemical attack	For facilities with non-aggressive groundwater/soil, i.e., pH >5.5, chlorides <500 ppm, and sulfates <1500 ppm, as a minimum, consider (1) examination of the exposed portions of the below-grade concrete, when excavated for any reason, and (2) periodic monitoring of below-grade water chemistry, including consideration of potential seasonal variations. For facilities with aggressive groundwater/soil (i.e., pH <5.5, chlorides >500 ppm, or sulfates >1500 ppm), and/or where the concrete structural elements have experienced degradation, a site-specific AMP accounting for the extent of the degradation experienced should be implemented to manage the concrete aging during the requested period of extended operation.	Further evaluation to determine whether a site-specific AMP is needed

Table V.8.C W150 FuelSolutions Storage System: Basemat (Pad) and Approach Slab (Ramp)

Item	Structure and/or Component[1]	Intended Function[2]	Material	Environment	Aging Effect/ Mechanism	Aging Management Program (AMP)	Program Type
V.8.C-6	Concrete (inaccessible areas): Exterior below-grade; basemat (concrete pad) and approach slab (ramp) (B)	SS	Reinforced concrete	Groundwater/ soil	Increase in porosity and permeability or loss of strength due to leaching of calcium hydroxide and carbonation	Further evaluation is required to determine if a site-specific AMP is needed to manage increase in porosity and permeability due to leaching of calcium hydroxide and carbonation of concrete in inaccessible areas. A site-specific AMP is not required if (1) there is evidence in the accessible areas that the flowing water has not caused leaching and carbonation, or (2) evaluation determined that the observed leaching of calcium hydroxide and carbonation in accessible areas has no impact on the intended function of the concrete structure.	Further evaluation to determine whether a site-specific AMP is needed
V.8.C-7	Concrete: Basemat (pad) and approach slab (ramp) (B)	SS	Reinforced concrete	Air – outdoor; Groundwater/ soil	Reduction of strength, cracking due to differential settlement, and erosion of porous concrete sub-foundation	If a de-watering or any other system is relied upon for control of settlement, then the licensee is to ensure proper functioning of that system through the requested period of extended operation.	Further evaluation to determine whether a site-specific AMP is needed

1. The structures and/or components are classified according to importance to safety, as follows: A = critical to safety operation, B = major impact on safety, and C = minor impact on safety.
2. The important to safety (ITS) functions of the structures and components are as follows: CB = confinement boundary, CC = criticality control, RS = radiation shielding, HT = heat transfer, SS = structural support, and FR = fuel retrievability.

APPENDIX A: QUALITY ASSURANCE FOR AGING MANAGEMENT PROGRAMS FOR USED-FUEL DRY CASK STORAGE SYSTEMS

Application for license renewal for an independent spent-fuel storage installation (ISFSI) or dry cask storage system (DCSS) must demonstrate that the effects of aging on structures, systems, and components (SSCs) subject to aging management review (AMR) will be managed in a manner that is consistent with the current licensing basis of the facility for the requested period of extended operation. Therefore, those aspects of the AMR process that affect the quality of structures, systems, and components important to safety are subject to the quality assurance (QA) requirements of 10 CFR Part 72, Subpart G, "Quality Assurance." The aging management program (AMP) elements that are related to QA are Elements 7 (corrective actions), 8 (confirmation process), and 9 (administrative controls). For non-important-to-safety structures, systems, and components subject to an AMR, an augmented QA program appended to an already existing 10 CFR Part 50, Appendix B, QA program or to an existing 10 CFR Part 72, Subpart G, QA program may be used to address the elements of corrective actions, confirmation processes, and administrative controls, provided it meets the recordkeeping requirements of 10 CFR 72.174, on the following bases:

- Criterion XVI of 10 CFR Part 50, Appendix B, requires that measures be established to ensure that conditions adverse to quality, such as failures, malfunctions, deviations, defective materials and equipment, and non-conformances, are promptly identified and corrected. In the case of significant conditions adverse to quality, measures must be implemented to ensure that the cause of the condition is determined and that corrective action is taken to preclude repetition. In addition, the cause of the significant condition adverse to quality and the corrective action implemented must be documented and reported to appropriate levels of management.

  The license renewal applicant should ensure that corrective actions include root-cause determinations for SSCs that are important to safety, and that the actions to be taken can prevent recurrence in a timely manner. The operating history, including corrective actions and design modifications, is an important source of information for evaluating the ongoing condition of in-scope SSCs. The applicant should provide detailed discussions of such history. The applicant may consider both site-specific and industry-wide experience, as relevant, as part of the overall condition assessment of in-scope SSCs.

- 10 CFR 72.172 requires that the licensee, applicant for a license, certificate holder, and applicant for a Certificate of Compliance shall establish measures to ensure that conditions adverse to quality, such as failures, malfunctions, deficiencies, deviations, defective material and equipment, and non-conformances, are promptly identified and corrected. In the case of a significant condition identified as adverse to quality, the measures must ensure that the cause of the condition is determined and corrective action is taken to preclude repetition. The identification of the significant condition adverse to quality, the cause of the condition, and the corrective action taken must be documented and reported to appropriate levels of management.

  To preclude repetition of significant conditions adverse to quality, the confirmation process element (Element 8) for license-renewal AMPs consists of follow-up actions to verify that the corrective actions implemented are effective in preventing a recurrence. The corrective actions described by the applicant should include root cause

determinations for SSCs that are important to safety, and the actions to be taken by the applicant must be sufficient to provide reasonable assurance that recurrence will not occur. The effectiveness of prevention and mitigation programs should be verified periodically, for example, through the use of condition-monitoring activities to verify the effectiveness of the mitigation programs. One-time events should be evaluated for possible mitigating measures during the renewal period.

Administrative controls provide a formal review and approval process, and any AMPs to be relied on for license renewal should have regulatory and administrative controls. Administrative action that must be taken in the event of noncompliance with a limit or condition should be specified.

- 10 CFR 72.24(h) requires that the safety analysis report submitted by a DCSS or ISFSI license applicant include a plan for the conduct of operations, including the planned managerial and administrative controls system used by the applicant's organization, and the program for training of personnel pursuant to subpart I, "Training and Certification of Personnel." Pursuant to 10 CFR 72.44(c)(5), administrative controls include the organization and management procedures, recordkeeping, review and audit, and reporting requirements necessary to ensure that the operations involved in the storage of spent fuel and reactor-related greater-than-Class-C waste in an ISFSI are performed in a safe manner.

Notwithstanding the suitability of its provisions to address quality-related aspects of the AMR process for license renewal, 10 CFR Part 72, Subpart G, covers only SSCs important to safety. Therefore, absent a commitment by the applicant to expand the scope of its 10 CFR Part 72, Subpart G, QA program to include non-safety-related SSCs subject to an AMR for license renewal, the AMPs applicable to SSCs that are not important to safety include alternative means to address corrective actions, confirmation processes, and administrative controls. Such alternative means are subject to review on a case-by-case basis.

References

10 CFR Part 50, Appendix B, Quality Assurance Criteria for Nuclear Power Plants, Nuclear Regulatory Commission, 1-1-12 Edition, 2012.

10 CFR 72.24, Contents of Application: Technical Information, Nuclear Regulatory Commission, 1-1-12 Edition, 2012.

10 CFR 72.44, License Conditions, Nuclear Regulatory Commission, 1-1-12 Edition, 2012.

10 CFR 72.174, Quality Assurance Records, Office of the Federal Register, Nuclear Regulatory Commission, 1-1-12 Edition, 2012.

10 CFR Part 72, Subpart G, Quality Assurance, Office of the Federal Register, Nuclear Regulatory Commission, 1-1-12 Edition, 2012.

APPENDIX B: COMPARISON OF TIME LIMITED AGING ANALYSES AND AGING MANAGEMENT PROGRAMS IN THE PRESENT REPORT WITH THOSE IN NUREG-1801, CHAPTERS X AND XI

B.1 Time-Limited Aging Analyses

Chapter III of the FCRD report includes descriptions of six time-limited aging analyses (TLAAs) that should be performed to manage the aging effects on the important-to-safety SSCs of DCSSs, to ensure that they continue to perform their function during the requested period of extended operation. The format and structure of each TLAA is based on subsections of Chapter 4 of the Standard Review Plan (SRP) NUREG-1800 for license renewal of operating reactors. Each TLAA consists of (a) a description of the time-dependent analysis, including the acceptance criteria; (b) a disposition of the TLAA based on NUREG-1927 Section 3.5.1 criterion (5)(i) or (ii); and (c) the preparation of a final safety analysis report (FSAR) supplement. The principal difference between Chapter 4 of NUREG-1800 and Chapter III of this report (FCRD-UFD-2014-000476) is that the former provides guidance for the review of TLAAs by the NRC staff, whereas the latter provides a set of generic TLAAs. In addition, the guidance in Chapter 4 subsections of NUREG-1800 are in accordance with applicable sections of 10 CFR Part 54, whereas those in Chapter III subsections of this report are in accordance with the applicable sections of 10 CFR Part 72. Table B.1 compares the TLAAs in this report with those in Chapter X of NUREG-1801.

Table B.1 Comparison of Time-Limited Aging Analyses in FCRD-UFD-2014-000476 with those in NUREG-1801, Chapter X.

FCRD-UFD-2014-000476 Chapter III	NUREG-1801 (GALL), Chapter X	Difference
III.1: Identification of Time-Limited Aging Analysis	No equivalent in the GALL report. Format and structure based on SRP Section 4.1: Identification of Time-Limited Aging Analyses	Principal differences between the two are described above.
III.2: Fatigue of Metal and Concrete Structures and Components	No equivalent in the GALL report. Format and structure based on SRP Section 4.3: Metal Fatigue	FCRD Section III.2 includes TLAAs associated with fatigue of metal and concrete structures and components, whereas SRP Section 4.3 only includes TLAAs associated with metal components. The FCRD III.2 for performing fatigue analysis of metal casks and canisters is covered in ASME Section III Division 1, Subsection NB; guidance for the fatigue analysis of concrete structures and components is given in ACI 215R-74; and design of other steel support structures is covered under ANSI/AISC N690-06 and ANSI/AISC-N360-10 Appendix 3. Other differences between the two are described above.
III.3: Corrosion Analysis of Metal Components	No equivalent in the GALL report. Not addressed in SRP.	Not Applicable.
III.4: Time-Dependent Degradation of Neutron-Absorbing Materials	No equivalent in the GALL report, though aging management of the degradation of Boraflex neutron absorbing materials is described in GALL AMP XI.M22 "Boraflex	The GALL AMP XI.M22 (Boraflex Monitoring) is largely a condition monitoring program. However, condition monitoring of neutron absorbing materials in welded canisters and bolted casks is generally not feasible, and a TLAA must be developed. In addition, Boraflex is

FCRD-UFD-2014-000476 Chapter III	NUREG-1801 (GALL), Chapter X	Difference
	Monitoring."	not used as a neutron absorbing material in dry cask storage systems.
III.5: Time-Dependent Degradation of Radiation-Shielding Materials	No equivalent in the GALL report. Not addressed in SRP.	Not Applicable.
III.6: Environmental Qualification of Electrical Equipment (removed)	X.E1: Environmental Qualification (EQ) of Electric Components	The GALL report includes TLAA X.E1 ("Environmental Qualification of Electric Components") to demonstrate that certain electrical components located in harsh plant environments (that is, those areas of the plant that could be subject to the harsh environmental effects of a loss of coolant accident (LOCA), high energy line breaks, or post-LOCA environment) are qualified to perform their safety function in those harsh environments even after taking into account the effects of in-service aging. There are no analogous environments or electrical control systems in dry cask storage systems, and the aging-related degradation of electrical monitoring equipment in these systems can be adequately managed by plant maintenance procedures. A TLAA for the environmental qualification of electrical equipment in dry cask storage systems is therefore not required.
III.7: Other Site-Specific Time-Dependent Aging-Analyses	No equivalent in the GALL report. Format and structure based on SRP Section 4.7: Other Site-Specific Time-Dependent Aging Analyses.	Principal differences between the two are described above.

B.2 Aging Management Programs

Chapter IV of the this report includes descriptions of seven aging management programs (AMPs) that may be used to manage the aging effects on the important-to-safety SSCs of DCSSs, to ensure that they continue to perform their function during the requested period of extended operation. Each AMP consists of 10 elements, consistent with the AMPs in the GALL report NUREG-1801, which deals with aging management in nuclear power plants. Table B.2 compare the AMPs in this report with those in Chapter XI of NUREG-1801.

Table B.2 Comparison of Aging Management Programs in FCRD-UFD-2014-000476 with those in NUREG-1801, Chapter XI.

FCRD-UFD-2014-000476 Chapter IV	NUREG-1801 (GALL), Chapter XI	Difference
IV.S1: Concrete Structures Monitoring Program: (i) visual inspection, (ii) sampling of ground water, (iii) cathodic protection (details not included)	(i) and (ii) XI.S6: Structures Monitoring Program (iii) XI.M41: Buried and Underground Piping and Tanks	(i) and (ii) In both AMPs, structures and inspection are according to ACI 349.3R, ACI 201.1R, and ANSI/ASCE-11, except ACI 201.1R is not included in the FCRD report. Aging effects in GALL XI.S6 are evaluated according to ACI 349.3R, ACI 318, and ANSI/ASCE-11. (iii) FCRD IV.S1 does not provide details of cathodic protection system aging management as compared with GALL XI.M41.

FCRD-UFD-2014-000476 Chapter IV	NUREG-1801 (GALL), Chapter XI	Difference
IV.S2: Monitoring of Protective Coatings on Carbon Steel Structures	XI.S8: Protective Coating Monitoring and Maintenance Program	Both AMPs are based on ASTM D5144-08 and RG 1.54, Rev. 2 guidance, except FCRD IV.S2 recommends D5144-08 Section 4.5 for Service Level II coatings and D5144-08 Section 4.4.3 and guidance of D7167-05 for level III coatings, whereas GALL XI.S8 considers only Level I coatings and implements D5163-08. Both provide additional guidance of EPRI 1019157 (formerly 1003102) for safety-related coatings, Service Level I or III.
IV.M1: External Surfaces Monitoring of Mechanical Components: (i) visual examination to detect loss of material and cracking of metal surfaces, loss of preload of bolting, and change in properties of polymeric components. (ii) aging effects on lightning protection system	(i) XI.M36: External Surfaces Monitoring of Mechanical Components (ii) No equivalent in GALL report. Lightning protection system aging management in IV.M1 is based on NFPA-780.	(i) FCRD IV.M1 is essentially the same as GALL XI.M36 except that the latter does not include preventive actions. IV.M1 includes the guidance of NUREG-1339 and EPRI NP-5769 to ensure structural integrity of bolting. IV.M1 also recommends qualified video or fiber optic technology for inspection of narrow spaces and areas of limited access. Visual inspections are performed at least once in 20 years. (ii) No equivalent in the GALL report.
IV.M2: Ventilation System Surveillance Program	No equivalent in GALL report.	No equivalent in GALL report. AMP IV.M2 is based on industry practices.
IV.M3: Welded Canister Seal and Leakage Monitoring Program: Site-specific assessment (a) to establish material & fabrication conditions, stress state, and environmental conditions (i.e., chloride deposits and temperature and (b) implement an inspection program to manage effects of cracking or leakage of welded canisters.	The basic format and structure of the program is based on GALL XI.M7 (BWR Stress Corrosion Cracking), which recommends (a) managing and implementing countermeasures to mitigate IGSCC and (b) performing inspection to monitor IGSCC and its effects. IV.M3 includes more stringent EVT-1 visual examination technique with a resolution equivalent to that recommended in GALL AMP XI.M9 (BWR Vessel Internals).	The specific details regarding measures to mitigate IGSCC are quite different between IV.M3 and the GALL AMPs. Whereas GALL XI.M7 implements material selection and fabrication in accordance to NUREG-0313, Rev. 2 and NRC Generic Letter GL 88-01, and control of reactor coolant environment, the FCRD IV.M3 program implements the guidance of NRC ISG-5, ISG-15, ISG-18, and ISG-25 for material selection and fabrication, and monitors the temperature and chloride deposits on the canister welds to determine whether deliquescence of dry salt deposits and subsequent IGSCC can occur. In addition, AMP IV.M3 proposes continuous or periodic monitoring of the atmosphere surrounding the canister as a possible means to verify the absence of radioisotopes that would indicate leakage from the canisters.
IV.M4: Bolted Cask Seal and Leakage Monitoring Program	No equivalent in GALL report.	No equivalent in GALL report. The format and structure of AMP IV.M4 is similar to that of FCRD IV.M3 for welded canister seal and leakage monitoring.
IV.M5: Canister/Cask Internals Structural and Functional Integrity Monitoring Program	No equivalent in GALL report.	No equivalent in GALL report. The objective of AMP IV.M5 is to manage the structural and functional integrity of storage canister/cask internals to ensure retrievability of the used-fuel assemblies without releasing radioactive materials. The program identifies specific indicators (e.g., surface temperature, radiation data trends, and seal force of metal seals) that are monitored to predict potential unanticipated degradation of canister/cask internals.

B.3 References

ACI 201.2R, Guide for Conducting a Visual Inspection of Concrete in Service, American Concrete Institute, Farmington Hills, MI, 2008.

ACI 215R-74, Considerations for Design of Concrete Structures Subjected to Fatigue Loading, American Concrete Institute, Farmington Hills, MI, December 1992.

ACI 349.3R, Evaluation of Existing Nuclear Safety-Related Concrete Structures, American Concrete Institute, Farmington Hills, MI, 2002.

ANSI/AISC N360-10, Specification for Structural Steel Buildings, American Institute of Steel Construction, Chicago, IL, June 22, 2010.

ANSI/AISC N690-06, Specification for Safety-Related Steel Structures for Nuclear Facilities, American Institute of Steel Construction, Chicago, IL, 2007.

ANSI/ASCE-11, Guideline for Structural Condition Assessment of Existing Buildings, American National Standards Institute, Washington, DC, 1999.

ASME Boiler and Pressure Vessel Code, Section III, Rules for Construction of Nuclear Power Plant Components, Division 1, Subsection NB, Class 1 Components, American Society of Mechanical Engineers, New York, 2004.

ASTM D 5144–08, Standard Guide for Use of Protective Coating Standards in Nuclear Power Plants, American Society for Testing and Materials, West Conshohocken, PA, 2005.

ASTM D 5163–08, Standard Guide for Establishing a Program for Condition Assessment of Coating Service Level I Coating Systems in Nuclear Power Plants, American Society for Testing and Materials, West Conshohocken, PA, 2005.

ASTM D 7167–05, Standard Guide for Establishing Procedures to Monitor the Performance of Safety-Related Coating Service Level III Lining Systems in an Operating Nuclear Power Plant, American Society for Testing and Materials, West Conshohocken, PA, 2005.

EPRI 1019157, Guideline on Nuclear Safety-Related Coatings, Revision 2 (formerly TR-109937 and 1003102), Electric Power Research Institute, Palo Alto, CA, December 2009.

EPRI NP-5769, Degradation and Failure of Bolting in Nuclear Power Plants, Volumes 1 and 2, Electric Power Research Institute, Palo Alto, CA, April 1988.

NFPA-780, Standard for the Installation of Lightning Protection Systems, National Fire Protection Association, Quincy, MA, August 5, 2004.

NRC GL 88-01, NRC Position on IGSCC in BWR Austenitic Stainless Steel Piping, Nuclear Regulatory Commission, Washington, DC, January 25, 1988.

NRC ISG-5, Confinement Evaluation, Revision 1, Interim Staff Guidance, Nuclear Regulatory Commission, Washington, DC, May 1999.

NRC ISG-15, Materials Evaluation, Revision 1, Interim Staff Guidance, Nuclear Regulatory Commission, Washington, DC, January 2001.

NRC ISG-18, The Design and Testing of Lid Welds on Austenitic Stainless Steel Canisters as the Confinement Boundary for Spent Fuel Storage, Interim Staff Guidance, Revision 1, Nuclear Regulatory Commission, Washington, DC, October 2008.

NRC ISG-25, Pressure and Helium Leakage Testing of the Confinement Boundary of Spent Fuel Dry Storage Systems, Interim Staff Guidance, Nuclear Regulatory Commission, Washington, DC, August 2010.

NRC RG 1.54, Rev. 2, Technical Report on Material Selection and Processing Guidelines for BWR Coolant Pressure Boundary Piping, Regulatory Guide, Nuclear Regulatory Commission, Washington, DC, October 2010.

NUREG-0313, Rev. 2, Resolution of Generic Safety Issue 29: Bolting Degradation or Failure in Nuclear Power Plants, Nuclear Regulatory Commission, Washington, DC, January 1988.

NUREG-1339, Resolution of Generic Safety Issue 29: Bolting Degradation or Failure in Nuclear Power Plants, Nuclear Regulatory Commission, Washington, DC, June 1990.

NUREG-1800, Standard Review Plan for Review of License Renewal Applications for Nuclear Power Plants, Rev. 2, Nuclear Regulatory Commission, Washington, DC, December 2010.

NUREG-1801, Generic Aging Lessons Learned (GALL) Report, Rev. 2, Nuclear Regulatory Commission, Washington, DC, December 2010.

NUREG-1927, Standard Review Plan for Renewal of Spent Fuel Dry Cask Storage System Licenses and Certificates of Compliance, Rev. 1, Nuclear Regulatory Commission, Washington, DC, March 2011.

About Argonne National Laboratory
Argonne is a U.S. Department of Energy laboratory managed by UChicago Argonne, LLC under contract DE-AC02-06CH11357. The Laboratory's main facility is outside Chicago, at 9700 South Cass Avenue, Argonne, Illinois 60439. For information about Argonne and its pioneering science and technology programs, see www.anl.gov.

DOCUMENT AVAILABILITY

Online Access: U.S. Department of Energy (DOE) reports produced after 1991 and a growing number of pre-1991 documents are available free via DOE's SciTech Connect (http://www.osti.gov/scitech/)

Reports not in digital format may be purchased by the public from the National Technical Information Service (NTIS):
U.S. Department of Commerce
National Technical Information Service
5301 Shawnee Rd
Alexandra, VA 22312
www.ntis.gov
Phone: (800) 553-NTIS (6847) or (703) 605-6000
Fax: (703) 605-6900
Email: **orders@ntis.gov**

Reports not in digital format are available to DOE and DOE contractors from the Office of Scientific and Technical Information (OSTI):
U.S. Department of Energy
Office of Scientific and Technical Information
P.O. Box 62
Oak Ridge, TN 37831-0062
www.osti.gov
Phone: (865) 576-8401
Fax: (865) 576-5728
Email: **reports@osti.gov**

Disclaimer
This report was prepared as an account of work sponsored by an agency of the United States Government. Neither the United States Government nor any agency thereof, nor UChicago Argonne, LLC, nor any of their employees or officers, makes any warranty, express or implied, or assumes any legal liability or responsibility for the accuracy, completeness, or usefulness of any information, apparatus, product, or process disclosed, or represents that its use would not infringe privately owned rights. Reference herein to any specific commercial product, process, or service by trade name, trademark, manufacturer, or otherwise, does not necessarily constitute or imply its endorsement, recommendation, or favoring by the United States Government or any agency thereof. The views and opinions of document authors expressed herein do not necessarily state or reflect those of the United States Government or any agency thereof.

Appendix E
FCT Document Cover Sheet

Name/Title of Deliverable/Milestone	*Managing Aging Effects on Dry Cask Storage Systems for Extended Long-Term Storage and Transportation of Used Fuel, Rev. 2*
Work Package Title and Number	ST Field Demo Support - ANL
Work Package WBS Number	FT-14AN080202
Responsible Work Package Manager	Yung Liu (Name/Signature)

Date Submitted 9/17/2014

Quality Rigor Level for Deliverable/Milestone	☒ QRL-3	☐ QRL-2	☐ QRL-1 ☐ Nuclear Data	☐ N/A*

This deliverable was prepared in accordance with Argonne National Laboratory
(Participant/National Laboratory Name)

QA program which meets the requirements of
☒ DOE Order 414.1 ☐ NQA-1-2000

This Deliverable was subjected to:

☒ Technical Review
Technical Review (TR)
Review Documentation Provided
☐ Signed TR Report or,
☐ Signed TR Concurrence Sheet or,
☒ Signature of TR Reviewer(s) below
Name and Signature of Reviewers

Yung Liu

☒ Peer Review
Peer Review (PR)
Review Documentation Provided
☐ Signed PR Report or,
☐ Signed PR Concurrence Sheet or,
☐ Signature of PR Reviewer(s) below

320 stakeholder comments received on the Rev. 1 report, of which 236 resulted in changes incorporated into the Rev. 2 report. Resolutions and dispositions of all comments are documented.

*Note: In some cases there may be a milestone where an item is being fabricated, maintenance is being performed on a facility, or a document is being issued through a formal document control process where it specifically calls out a formal review of the document. In these cases, documentation (e.g., inspection report, maintenance request, work planning package documentation or the documented review of the issued document through the document control process) of the completion of the activity along with the Document Cover Sheet is sufficient to demonstrate achieving the milestone. QRL for such milestones may be also be marked N/A in the work package provided the work package clearly specifies the requirement to use the Document Cover Sheet and provide supporting documentation.