ANL-13/10

Control and Protection System Conceptual Design Logic Diagrams for Neutron Source Facility at the Kharkov Institute of Physics and Technology

Nuclear Engineering Division

About Argonne National Laboratory
Argonne is a U.S. Department of Energy laboratory managed by UChicago Argonne, LLC under contract DE-AC02-06CH11357. The Laboratory's main facility is outside Chicago, at 9700 South Cass Avenue, Argonne, Illinois 60439. For information about Argonne and its pioneering science and technology programs, see www.anl.gov.

DOCUMENT AVAILABILITY

Online Access: U.S. Department of Energy (DOE) reports produced after 1991 and a growing number of pre-1991 documents are available free via DOE's SciTech Connect (http://www.osti.gov/scitech/)

Reports not in digital format may be purchased by the public from the National Technical Information Service (NTIS):
U.S. Department of Commerce
National Technical Information Service
5301 Shawnee Rd
Alexandra, VA 22312
www.ntis.gov
Phone: (800) 553-NTIS (6847) or (703) 605-6000
Fax: (703) 605-6900
Email: **orders@ntis.gov**

Reports not in digital format are available to DOE and DOE contractors from the Office of Scientific and Technical Information (OSTI):
U.S. Department of Energy
Office of Scientific and Technical Information
P.O. Box 62
Oak Ridge, TN 37831-0062
www.osti.gov
Phone: (865) 576-8401
Fax: (865) 576-5728
Email: **reports@osti.gov**

Disclaimer
This report was prepared as an account of work sponsored by an agency of the United States Government. Neither the United States Government nor any agency thereof, nor UChicago Argonne, LLC, nor any of their employees or officers, makes any warranty, express or implied, or assumes any legal liability or responsibility for the accuracy, completeness, or usefulness of any information, apparatus, product, or process disclosed, or represents that its use would not infringe privately owned rights. Reference herein to any specific commercial product, process, or service by trade name, trademark, manufacturer, or otherwise, does not necessarily constitute or imply its endorsement, recommendation, or favoring by the United States Government or any agency thereof. The views and opinions of document authors expressed herein do not necessarily state or reflect those of the United States Government or any agency thereof, Argonne National Laboratory, or UChicago Argonne, LLC.

Control and Protection System Conceptual Design Logic Diagrams for Neutron Source Facility at the Kharkov Institute of Physics and Technology

prepared by

Yousry Gohar, Tom Wei, Laural Briggs, Young Park, Tyler Sumner, Austin L. Grelle, and S. Joshua Stein*

Nuclear Engineering Division, Argonne National Laboratory
*Materials Science Division, Argonne National Laboratory

December 2013

CONTENTS

Contents i
Tables iii
Acronyms vii
Definitions viii
Nomenclature ix
Symbols x
1 INTRODUCTION 1
2 SYSTEM DESCRIPTION 1
2.1 Classes of Instrumentation 1
2.2 Actuators 2
2.3 Facility Systems 2
2.3.1 SCA Cooling System 3
2.3.2 Secondary Cooling System 3
2.3.3 Storage Pool Coolant System 3
2.3.4 Confinement Alignment 4
2.3.5 Neutron Flux/Accelerator System 4
2.3.6 Radioactive Waste System 4
2.3.7 Radiation Monitor System 4
2.4 Plant Modes and Plant Systems 4
2.5 Plant System Integration with PCS/PPS 5
3 PLANT PROTECTION SYSTEM CONCEPTUAL DESIGN 7
3.1 General PPS Description 7
3.2 Types of Alarms and Trips 8
3.3 Instrument Channel System Architecture 8
3.4 Basic PPS Block Structure 9
3.5 Alarm/Trip Logic Circuits for Individual System Parameters 9
3.5.1 PPS Signal Numbering Conventions 9
3.5.2 Commonly Used Mathematical Blocks 12
3.5.3 Neutron Flux 14
3.5.4 Seismic 14
3.5.5 SCA Cooling System 14
3.5.6 Target Cooling System 15
3.5.7 Secondary Cooling System 16
3.5.8 Storage Pool Coolant System 16
3.5.9 Radioactive Waste Tank 17
3.5.10 Confinement 17
3.5.11 Radiation Monitoring 18
3.5.12 Manual Trip 18
3.6 PPS Block Structure for the Six Facility Modes 18
3.6.1 Mode I – Operating 18
3.6.2 Mode II – Testing/Calibration 18
3.6.3 Mode III – Shutdown 19
3.6.4 Mode IV – Loading/Unloading 19

3.6.5 Mode V – Plant Maintenance/Target Replacement 19
3.6.6 Mode VI – Plant Unattended 19
4 PLANT CONTROL SYSTEM CONCEPTUAL DESIGN 19
4.1 PCS Signal Numbering 19
4.2 Component Control Logic Diagrams 20
4.3 Subcritical Assembly Tank Level Controller 21
4.4 Storage Pool Level Controller 22
5 PLANT PROCEDURES OUTLINE 22
5.1 Procedure 1: Starting the Facility 24
5.2 Procedure 2: Shutting the Facility Down 27
5.3 Procedure 3: Entering Mode IV 30
5.4 Procedure 4: Exiting Mode IV 31
5.5 Procedure 5: Entering Mode V 32
5.6 Procedure 6: Exiting Mode V 33
5.7 Procedure 7: Entering Mode VI 33
5.8 Procedure 8: Exiting Mode VI 33
6 PLANT COMPUTER SYSTEM ARCHITECTURE CONCEPTUAL DESIGN 35
6.1 Operator Interface Software 35
6.1.1 EPICS Control System 35
6.1.2 Control System Studio (CSS-BOY) 37
6.1.3 PyEpics 37
6.2 Operator Interface Implementation with EPICS/CSS-BOY 38
6.3 GUI Applications 38
6.3.1 Plant Status Panels 38
6.3.2 Plant Control Panels 39
6.4 Main System IOC 39
6.4.1 Main system record database 40
6.4.2 Sequencer 42
6.5 Soft IOC as Field IOC Emulator 43
6.6 Integration and Testing with Plant System Model 44
6.6.1 Bridge Program 44
6.6.2 Soft IOC for Interface with Plant System Model 45
6.6.3 Simulation Test Cases: Trip 45
6.6.4 Simulation Test Cases: Sequence Routines 48

TABLES

Table 1. Neutron Source Facility Operations Summary 5
Table 2. Door/Air-Lock Interlocks 6
Table 3. PPS Logic Block Signal Numbering 11
Table 4. Neutron Flux Alarms and Trips 14
Table 5. Seismic Alarms and Trips 14
Table 6. SCA Cooling System Alarms and Trips 15
Table 7. Target Cooling System Alarms and Trips 16
Table 8. Secondary Cooling System Alarms and Trips 16
Table 9. Storage Pool Alarms and Trips 17
Table 10. Radioactive Waste Tank Alarms and Trips 17
Table 11. Confinement Alarms and Trips 17
Table 12. Radiation Monitoring Alarms and Trips 18
Table 13. PCS Logic Block Signal Numbering 20
Table 14. Start-up Mode I 24
Table 15. Start-up Mode II 26
Table 16. Shut Down Mode III from Mode I 28
Table 17. Shut Down Mode III from Mode II 29
Table 18. Loading/Unloading Mode IV 31
Table 19. Shut-down Mode III from Mode IV 32
Table 20. Plant Maintenance/Target Replacement Mode V 32
Table 21. Shut-down Mode III from Mode V 33
Table 22. Plant Unattended Mode VI 34
Table 23. Shut-down Mode III from Mode VI 34
Table 24. IOC components of main system record database 41

Figures

Figure 1. Instrumentation Layout 50
Figure 2. SCA Cooling System 51
Figure 3. Target Cooling System 52
Figure 4. Secondary Cooling System 53
Figure 5. Fuel Pool Coolant System 54
Figure 6. Confinement Alignment PCS/PPS 55
Figure 7. Neutron Flux Power System 56
Figure 8. PCS/PPS Configuration 57
Figure 9. Channel System Architecture 58
Figure 10. Generic PPS Block Diagram 59
Figure 11. Logic Block Signal Numbering Template for Logic Testing Model 60
Figure 12. Mode Signal Numbering Template for Logic Testing Model 61
Figure 13. High Range Flux Logic 62
Figure 14. Low Range Flux Logic 63
Figure 15. Negative Flux Rate Logic 64
Figure 16. Quadrant Power Ratio Logic 65
Figure 17. Seismic Logic 66
Figure 18. SCA Outlet Temperature Logic 67
Figure 19. SCA Flow Logic 68
Figure 20. SCA Leak Logic 69
Figure 21. SCA ΔT Logic 70
Figure 22. SCA Pressure Logic 71
Figure 23. SCA Pump ΔP Logic 72
Figure 24. SCA Tank Level Logic 73
Figure 25. SCA Tank Temperature Logic 74
Figure 26. Target Outlet Temperature Logic 75
Figure 27. Target Flow Logic 76
Figure 28. Target ΔT Logic 77
Figure 29. Target Pressure Logic 78
Figure 30. Pump/Target ΔP Logic 79
Figure 31. Target Surge Tank Level Logic 80
Figure 32. Secondary Pressure Logic 81
Figure 33. Secondary Pump ΔP Logic 82
Figure 34. Secondary SCA Outlet Temperature Logic 83
Figure 35. Secondary SCA Flow Logic 84
Figure 36. Secondary SCA ΔT Logic 85
Figure 37. Secondary Target Outlet Temperature Logic 86
Figure 38. Secondary Target Flow Logic 87
Figure 39. Secondary Target ΔT Logic 88
Figure 40. Fuel Pool Leak Logic 89
Figure 41. Fuel Pool Level Logic 90
Figure 42. Fuel Pool Temperature Logic 91
Figure 43. Radiation Waste Tank Leak Logic 92
Figure 44. Radiation Waste Tank Level Logic 93
Figure 45. Radiation Waste Tank Temperature Logic 94
Figure 46. Air Lock Position Logic 95

Figure 47. Confinement Air Pressure Logic 96
Figure 48. Top Shield Position Logic 97
Figure 49. Shield Air Radiation Logic 98
Figure 50. Building Radiation Logic 99
Figure 51. Surge Tank Cover Gas Radiation Logic 100
Figure 52. H_2O Radiation Logic 101
Figure 53. Stack Radiation Logic 102
Figure 54. Manual Trip Logic 103
Figure 55. Operating Mode I PPS Block Diagram 104
Figure 56. Testing/Calibration Mode II PPS Block Diagram 105
Figure 57. Shutdown Mode III/VI PPS Block Diagram 106
Figure 58. Loading/Unloading Mode IV PS Block Diagram 107
Figure 59. Plant Maintenance/Target Replacement Mode V PPS Block Diagram 108
Figure 60. Top Shield Logic 109
Figure 61. Valve Logic 110
Figure 62. SCA Valve Logic 111
Figure 63. Pump Logic 112
Figure 64. Blower Logic 113
Figure 65. Fuel Arm Logic 114
Figure 66. SCA Cooling System PCS SCA Tank Level Controller 115
Figure 67. Tank Level V-57 Controller Logic 116
Figure 68. Tank Level V-53 Controller Logic 117
Figure 69. Storage Pool Coolant System PCS Fuel Pool Level Controller 118
Figure 70. Storage Pool Level Controller Logic 119
Figure 71. Start-up Sequence Interlocks 120
Figure 72. Shutting Down Sequence Interlocks 121
Figure 73. Enter Mode IV Sequence Interlocks 122
Figure 74. Exit Mode IV Sequence Interlocks 123
Figure 75. Enter Mode V Sequence Interlocks 124
Figure 76. Exit Mode V Sequence Interlocks 125
Figure 77. Enter Mode VI Sequence Interlocks 126
Figure 78. Exit Mode VI Sequence Interlocks 127
Figure 79. Plant Computer System Architecture 1-out-of-3 Channels 128
Figure 80. EPICS Control System 129
Figure 81. Structure of IOC 129
Figure 82. Examples of EPICS records 130
Figure 83. Linked records 131
Figure 84. An example of SNL implementation of a state transition diagram 132
Figure 85. EPICS based control system structure for KIPT/AIDS 132
Figure 86. KIPT/ADS control system configured for test with simulator 133
Figure 87. Overall layouts of the GUI panels 135
Figure 88. SCA cooling system panel 136
Figure 89. Target cooling system panel 137
Figure 90. Secondary cooling system panel 138
Figure 91. Plant Protection System Panel 139
Figure 92. Alarm/Trip button disable logic 140
Figure 93. Process Variable Plots Panel 141
Figure 94. Operator main panel 142

Figure 95. Sequence button enable/disable logic 143
Figure 96. Plant manual control panel 144
Figure 97. PCS manual control button disable logic 145
Figure 98. Automatic sequence panels 146
Figure 99. Sequencer button disable logic 147
Figure 100. Computation of disable mode command 148
Figure 101. Startup sequence 149
Figure 102. Shutdown sequence 150
Figure 103. Fueling/refueling sequence 151
Figure 104. Target replacement/maintenance sequence 152
Figure 105. Plant unattended sequence 153
Figure 106. Soft IOC components connected with the main IOC system components 154
Figure 107. An operator control panel to perform manual test 155
Figure 108. Bridge program to interface EPICS with G-PASS/SCM plant system model 156
Figure 109. Example entries of EPICS – GPASS/SCM variable name mapping 156
Figure 110. Handshake between bridge program and plant system model 157
Figure 111. Linked database to determine the individual PPS modes 158
Figure 112. Linked database to determine the disable modes of the combined variables 158
Figure 113. Database logic to split control inputs 159
Figure 114. Accelerator power trip 160
Figure 115. SCA coolant pump trip 161
Figure 116. Target coolant pump trip 162
Figure 117. Secondary coolant pump trip 163
Figure 118. Blowers shut off with eventual Plant Trip following 165
Figure 119. Start-up sequence invoked from operator main panel 166
Figure 120. Start-up sequence 169
Figure 121. Shutdown sequence invoked from operator main panel 170
Figure 122. Shutdown sequence 173
Figure 123. Fueling/refueling sequence invoked from operator main panel 174
Figure 124. Loading/Unloading mode entry sequence 175
Figure 125. Loading/Unloading mode exit sequence 176
Figure 126. Fuel handling machine simulator 177
Figure 127. Target handling/maintenance sequence invoked from operator main panel 178
Figure 128. Target handling/maintenance mode entry and exit sequence 179
Figure 129. Plant unattended sequence invoked from operator main panel 180
Figure 130. Plant unattended mode entry and exit sequence 181

ACRONYMS

EPICS – Experimental Physics and Industrial Control System

GUI – Graphical User Interface

HVAC – Heating, Ventilation, and Air Conditioning

IOC – Input/Output Controller

PCS – Plant Control System

PLC – Programmable Local Controller

PPS – Plant Protection System

SCA – Subcritical Assembly

TBD – To Be Determined

T-H – Thermal-Hydraulic

DEFINITIONS

Auctioneering

The process of selecting the signal with the most conservative value from a set of two or more signals

Bistable devices

Bistable devices are digital gates that produce only two signals, e.g., 0 and 1

Confinement Alignment

Alignment of the confinement is achieved by closing the top shield, closing the airlock, starting the confinement venting system, and checking if the confinement radiation level is acceptable

Confinement Radiation Monitoring

A set of radiation detectors that measure radiation level in the confinement at different locations

Confinement Venting

A system of air blowers and filters for discharging confinement air to the stack to maintain a sub-atmospheric confinement pressure

Dosimetry

Measurement of the energy deposition of ionizing radiation

Nuclear Actuators

A set of devices that change the electron beam current to alter the neutron flux power

Nuclear Instrumentation

The flux sensors used to measure neutron flux

Process T-H Actuators

A set of devices, such as motors, that change the setting of thermal-hydraulic equipment, such as valves, when a control signal is received

Process T-H Instrumentation

An instrument set for measuring thermal-hydraulic system parameters

NOMENCLATURE

FCV	Flow Control Valve
FT	Flow Transmitter
HX	Heat Exchanger
I/A	Isolation Amplifier
LT	Level Transmitter
M	Motor
P	Pressure
T	Temperature

SYMBOLS

Blower

Motor

Pump

Valve

Transformer

Relay

Magnetic Coil

Hot Line

Ground

Button

Shield

Fuel Arm

1 INTRODUCTION

Argonne National Laboratory (ANL) in the United States and the Kharkov Institute of Physics and Technology in Ukraine are collaborating on the design development of an experimental neutron source facility. It is an accelerator driven system that utilizes a subcritical assembly driven by an electron accelerator. This facility will be used to conduct basic and applied nuclear research, produce medical isotopes, and train young nuclear specialists. Instrumentation systems are used to monitor various process and environmental parameters throughout the neutron source facility. That information is displayed to the operator or is transmitted to the appropriate plant control systems (PCS) during normal plant operation. This information is also transmitted to the plant protection system (PPS) alarms and trips and to the engineered safety-feature systems during off-normal and accident conditions. Severe-accident management is precluded except for evacuation alarms and confinement isolation.

This report presents a conceptual design of the various facility instrumentation and control systems that are related through function performance requirements, design bases, and system descriptions. The primary purpose of the instrumentation and control systems is to exercise proper control and provide automatic protection against unsafe and improper facility operation during steady-state and transient operation and to initiate signals to mitigate the consequences of faulted conditions.

The information presented in this report emphasizes those instrumentation and control systems that are important to ensuring that the subcritical assembly can be operated without undue risk to the health and safety of the public. As opposed to the analog systems of the past, this will be an all-digital system. Redundancy will be provided so that neither the single failure of any active component nor the single failure of any passive component will result in a loss of the capability of the system to perform its safety functions. This is referred to as the “single failure” criterion.

2 SYSTEM DESCRIPTION

Figure 1 shows the facility instrumentation layout. Nuclear and process instrumentation systems provide redundant monitoring of various plant parameters and utilize these signals to develop control and protective functions for the target, subcritical assembly (SCA), and auxiliary systems.

2.1 Classes of Instrumentation

The three classes of instrumentation that have been identified are:

- Nuclear Instrumentation
- Process Thermal-Hydraulic (T-H) Instrumentation
- Radiation Monitoring Instrumentation (Dosimetry)

The only nuclear instrumentation in the facility is for the neutron flux sensors. Process thermal-hydraulic instrumentation measures thermal-hydraulic system parameters and includes flow transmitters for water and air, thermocouples, pressure transducers, and water level gauges. Radiation monitoring is performed by air quality monitors.

Position sensors are located within the shield, the air lock, and the fuel arm, but those sensors are considered to be an integral part of these components and thus do not make up a fourth class of instrumentation.

2.2 Actuators

Two classes of actuators have been identified:

- Nuclear Actuators
- Process Thermal-Hydraulic T-H Actuators

Nuclear actuators are devices that change the accelerator beam current to alter the neutron flux power. Process T-H actuators are devices (usually motors) that change the setting of T-H equipment when a control signal is received. The T-H components in the neutron source facility that are controlled by process actuators include pumps, blowers, and valves. The fuel arm, the air lock, and shield locations are also controlled by motors. Some of these components are operated by one set of two-position logic (pumps, blowers, and the fuel arm), while others use two sets of two-position logic (valves, the air lock, and the shield). If y is the control logic output signal that goes to the component actuator, then components with one set of two-position logic operate as follows:

- Pump = ON (motor running, y=1) vs. OFF (motor not running, y=0)
- Blower = ON (running, y=1) vs. OFF (not running, y=0)
- Fuel arm = ACTIVATED (y=1) vs. DE-ACTIVATED (y=0)

Those with two sets of two position logic have three possible states:

- Shield:
    - OPEN THE SHIELD (motor running to open shield: y_Open=1, y_Close=0),
    - CLOSE THE SHIELD (motor running to close shield: y_Open=0, y_Close=1), and
    - DO NOTHING (motor not running: y_Open=0, y_Close=0).
- Valve
    - OPEN THE VALVE (motor running to open valve: y_Open=1, y_Close=0),
    - CLOSE THE VALVE (motor running to close valve: y_Open=0, y_Close=1), and
    - DO NOTHING (motor not running: y_Open=0, y_Close=0).
- Air lock
    - OPEN THE AIR LOCK (motor running to open air lock: y_Open=1, y_Close=0),
    - CLOSE THE AIR LOCK (motor running to close air lock: y_Open=0, y_Close=1), and
    - DO NOTHING (motor not running: y_Open=0, y_Close=0).

The fourth state, in which both y_Open and y_Close equal 1, is not possible.

2.3 Facility Systems

The facility components that either provide signal data to the PPS and/or PCS or receive actuator signals from the PPS and/or PCS can be divided into the following eight systems:

(1) SCA cooling system
(2) Target cooling system
(3) Secondary cooling system
(4) Storage pool coolant system

(5) Confinement alignment
(6) Neutron flux/accelerator system
(7) Radioactive waste system
(8) Radiation monitor system
(9) Accelerator cooling system

The first eight systems are discussed below while the last system will be discussed in a separate document.

2.3.1 SCA Cooling System

The SCA cooling system layout integration with the PCS and PPS is presented schematically in Figure 2 and consists of (1) the coolant piping, pumps, and valves that comprise the heat transport system for the SCA; (2) the clean-up system for the water flowing through the SCA coolant piping; and (3) the SCA coolant make-up/letdown/drain system. The SCA cooling system also interfaces with the SCA tank cover air system. Parameters from all three segments of the SCA cooling system and from the cover air system are input to the PCS; parameters from the SCA heat transport system, coolant make-up/letdown/drain system, and radiation measurements from air and water are monitored by the logic blocks in the PPS. Target Cooling System

The target cooling system layout integration with the PCS and PPS is shown schematically in Figure 3 and consists of (1) the coolant piping, pumps, and valves that comprise the heat transport system for the target, (2) the clean-up system for the water flowing through the target coolant piping, and (3) the target coolant make-up/letdown/drain system. The target cooling system also interfaces with the surge tank cover air system. Parameters from all three segments of the target cooling system and from the cover air system are input to the PCS; parameters from the target heat transport system, coolant make-up/letdown/drain system, and radiation measurements from air and water are monitored by the logic blocks in the PPS.

2.3.2 Secondary Cooling System

The secondary cooling system layout integration with the PCS and PPS is presented schematically in Figure 4 and consists of (1) the coolant piping, pumps, and valves that comprise the heat transport system for the secondary loop, (2) the clean-up system for water flowing through the secondary loop, and (3) the secondary loop water make-up/letdown/drain system. The secondary cooling system also interfaces with the ambient air. Parameters from all three segments of the secondary cooling system, plus temperature measurements taken from the ambient air, are input to the PCS; parameters from the secondary heat transport system, plus water radiation measurements, are monitored by the logic blocks in the PPS.

2.3.3 Storage Pool Coolant System

The spent fuel/target pool (storage pool) coolant system layout integration with the PCS and PPS is presented schematically in Figure 5. It is a passive heat removal system that consists of (1) the pool water clean-up system, (2) the pool water make-up/drain system, and (3) an air draft system. The coolant system also interfaces with the pool cover air system. The PCS receives measurements of water purity, water radiation levels, and the level of the water in the pool. The

PPS monitors water radiation levels, water level in the pool, pool water temperature, radiation levels in the cover air system, and any leakage from the pool.

2.3.4 Confinement Alignment

Facility confinement alignment integration with the PCS and PPS is shown schematically in Fig. 6. Confinement integrity relies on (1) the top shield system, (2) the air lock entry system, (3) the confinement venting system, and (4) radiation monitoring. Both the PCS and PPS receive information on shield and air lock positions, air pressure within the confinement, and radiation levels in the air within the confinement building and in the building outside the confinement. In addition, the PPS monitors the stack radiation levels.

2.3.5 Neutron Flux/Accelerator System

The neutron flux /accelerator system integration with the PCS and PPS is diagrammed schematically in Fig. 7 and includes (1) the target within the SCA, (2) the SCA itself, and (3) the accelerator. The PCS and PPS receive neutron flux level measurements from neutron detectors at locations within the SCA. A separate accelerator monitoring capability and control system will be designed and integrated into the plant PCS and PPS at a later time by the accelerator designers.

2.3.6 Radioactive Waste System

The radioactive waste system will consist of an underground storage tank located next to the neutron source facility. Specifics of the design will be developed later by the radioactive waste system designers.

2.3.7 Radiation Monitor System

Radiation monitors are located throughout the building and will provide input to both the PCS and PPS.

2.4 Plant Modes and Plant Systems

Six facility condition modes have been identified:

Mode I: Operating
Mode II: Testing/Calibration
Mode III: Shutdown
Mode IV: Loading/Unloading (fuel, beryllium, boron carbide, or irradiation assemblies)
Mode V: Plant Maintenance/Target Replacement
Mode VI: Plant Unattended

The facility is in Mode I during normal operation of the SCA. If the accelerator is on but the facility is undergoing low-power testing or calibration of any components or system, the facility is regarded as being in Mode II. When all active systems are shut down, the facility condition is Mode III. When loading or unloading of fuel, beryllium, boron carbide, or irradiation assemblies of the SCA is in progress, the facility is in Mode IV. If plant maintenance work is being performed or the target is being replaced, the facility is in Mode V. Finally, when the facility is shut down and personnel leave the premises for an extended period of time so that the facility is

unattended, the facility is in Mode VI. This is the long-term shutdown mode. Note that when the facility is in Mode VI, two B_4C absorber assemblies must be inserted into the SCA grid from the storage racks before the facility personnel can depart the premises for an extended duration. These absorber assemblies ensure that k_{eff} for the SCA remains below 0.95. Upon return of facility personnel to the premises, the procedure would be to enter Mode III from Mode VI by reversing the process and removing the two B_4C absorber assemblies from the SCA grid and returning them to their storage racks.

Table 1 identifies which of the facility systems discussed in Sec. 2.3 are active for each of the six condition modes of the facility. It can be seen that the accelerator will be run only during Modes I and II. In contrast, the radioactive waste system and storage pool cooling system are active regardless of facility mode and are not included in the table. The B_4C absorber assemblies are used only in Mode VI when placing the facility in the unattended mode. The building radiation monitoring and the neutron flux monitoring system are also active for all the modes.

Table 1. Neutron Source Facility Operations Summary

System	Facility Condition Mode					
	Operating (I)	Testing/ Calibration (II)	Shutdown (III)	Loading/ Unloading (IV)	Plant Maintenance /Target Replacement (V)	Plant Unattended (VI)
Accelerator system	Yes	Yes	No	No	No	No
SCA cooling	Yes	No	No	No	No	No
Target cooling	Yes	No	No	No	No	No
Secondary cooling	Yes	Accelerator only	No	No	No	No
Confinement	Yes	Yes	Yes	Yes	Yes	Yes
B_4C absorbers	No	No	No	No	No	Yes

In accordance with the operating modes of Table 1 and the appropriate states of the major systems, interlocks are applied to the doors and airlocks of the building. Table 2 shows the interlock logic of the doors/airlocks based on the facility operating mode. “Enable” means that the door/airlock can be opened on demand according to the administrative operating procedure, while “Disable” means that the door/airlock cannot be opened on demand. A manual override should also be provided by the authorized operating personnel according to the administrative operating procedure.

2.5 Plant System Integration with PCS/PPS

The configuration of the plant control system/plant protection system conceptual design is presented in Figure 8. PCS/PPS Configuration. The figure shows the major segments of the

facility that were introduced in Sections 2.1, 2.2, and 2.3 and how they interconnect through the PPS/PCS, thus summarizing the facility systems integration with the PCS and PPS. Isolation amplifiers (I/A) are provided so that faults in the PCS do not propagate from the PCS into the PPS. The various sensor signals from each facility system, such as the SCA Coolant System, are transmitted from the system to both the PCS and PPS, so isolation amplifiers are needed.

As discussed in Sec. 2.1, the total set of sensor signals can be divided into three groups: (1) nuclear instrumentation (2) dosimetry, and (3) process T-H instrumentation. The nuclear instrumentation can be further subdivided into (a) high-range sensors for high neutron flux levels and (b) low-range sensors for low neutron flux levels. Because the T-H parameters have a narrow range of variation for this facility, the same group of process T-H instruments provides the parameter measurements for both power range and start-up/shutdown range for all facility T-H systems. This is shown in Fig. 8. Dosimetry instrumentation consists of the radiation monitors.

Table 2. Door/Air-Lock Interlocks

Plant Mode	SCA/ Experiment Hall				Accelerator Tunnel		Pump Room
	Personnel Air Lock		Truck Access Door		Door 1	Door 2	Door
	Outer	Inner	Outer	Inner			
Mode I: Operating SCA Shield Y* Accelerator Y Target & SCA Pumps Y Confinement Y	Enable^{+} Disable^{++}	Disable Enable	Disable	Disable	Disable	Disable	Disable
Mode II: Testing SCA Shield Y Accelerator Y Pumps N** Confinement Y	Enable Disable	Disable Enable	Disable	Disable	Disable	Disable	Disable
Mode III: Shutdown SCA Shield Y Accelerator N Pumps N Confinement Y	Enable Disable	Disable Enable	Disable Enable	Enable Disable	Enable	Enable	Enable
Mode IV: Loading/Unloading SCA Shield Y Accelerator N Pumps N Confinement Y	Enable Disable	Disable Enable	Disable Enable	Enable Disable	Enable	Enable	Enable

Mode V: Plant Maintenance/ Target Replacement SCA Shield N Accelerator N Pumps N Confinement Y	Enable Disable	Enable Disable	Enable Disable	Enable Disable	Enable	Enable	Enable
Mode VI: Plant unattended SCA Shield Y Accelerator N Pumps N Confinement Y	Enable Disable	Enable Disable	Disable	Disable	Disable	Disable	Enable

Y* = system on.
N** = system off.
Enable^{+} = can be opened.
Disable^{++} = cannot be opened.

When these sensor signals are processed in the PCS and PPS logic, actuator signals are sent back to the facility systems. As shown in Fig. 8, the actuator signals are for the activation of either nuclear actuators or process T-H actuators. Those signals directed to the nuclear actuators are sent to adjust the neutron flux power level, and thus the target/SCA systems must interface with the accelerator system. Those signals for the process T-H actuators are propagated to the facility systems shown in Fig. 8 and result in starting or stopping pumps, closing or opening valves, etc.

Three interfaces are shown in Fig. 8:

1. The aforementioned interface between the accelerator system and the target/SCA system.
2. The interface between the facility and the experimenter. Clearly, signals such as radiation signals will be part of the PPS, but there may be PPS or PCS signals that will be unique to each experiment.
3. The interface between the confinement isolation circuit and the HVAC system. If an accident occurs, the confinement isolation signal generated by the confinement alignment system will be sent to the HVAC control system to turn off the HVAC in order to maintain confinement isolation.

3 PLANT PROTECTION SYSTEM CONCEPTUAL DESIGN

3.1 General PPS Description

The plant protection system automatically keeps the Target/SCA operating within a safe range by shutting down the Target/SCA/ACC system whenever the limits of the range are approached. The safe operating range is defined by factors such as mechanical/hydraulic limitations on equipment and heat transfer phenomena. The PPS therefore keeps surveillance on process parameters related to equipment mechanical limitations (such as pressure), and also on parameters that affect the heat transfer capability (such as flow and coolant temperatures). Whenever a parameter exceeds a set point, the Target/SCA/ACC system, will be immediately

shut down/tripped to protect against either damage to nuclear fuel and cladding or loss of system integrity that could lead to release of radioactive fission products into the confinement.

In addition to the requirements for a Target/SCA/ACC system trip actuation, the PPS can also actuate other actions or trips, such as engineered safety features. A manual trip is also provided.

The PPS consists of the (1) nuclear instrumentation channels, (2) process T-H instrumentation channels, (3) radiation monitoring instrumentation, (4) bistable devices and the logic train, and (5) actuators.

Protective signals are normally generated by bistable devices. A bistable device changes its output (on-off) abruptly when a preset input level is reached. Using these bistables, the nuclear and process instrument systems send trip signals to the logic trains. There are three complete and independent sets of logic trains in the PPS. The protection logic is basically one-out-of-three logic. For physical separation, three independent groups of components and structures will be used to house the three sets of logic trains in the form of PLCs and plant computers, as discussed below in Sec. 3.3. If actuation of an engineered safety feature is required, the protection logic trains will actuate the appropriate safety devices. Permissive signals are also provided to the logic trains to allow automatic or manually initiated interlocks and bypasses. All protective features are designed to cause a trip when de-energized, to maintain fail-safe operation and meet the “single failure” criterion described in Sec. 1.

3.2 Types of Alarms and Trips

Process parameters throughout the facility are monitored continuously to determine if they are within an acceptable range. These include temperatures, flows, pressures, pressure drops across pumps, tank water levels, neutron flux values, water leakage from tanks, radiation readings, and positions of the air lock and top shield. For each parameter, there is a high alarm threshold at the point where the parameter value has moved above the acceptable range. For a few parameters, the parameter value must remain within a range, and so there will be two alarm thresholds – one high and one lower. If a parameter value crosses the lower alarm threshold, an alarm will sound and an indicator lamp will come on in the alarm panel, but the facility will continue to operate. Beyond the alarm threshold is a trip threshold; if the parameter value moves beyond this trip threshold, a set of trips will be activated and the facility will shut down. These trips include immediate accelerator shutdown and confinement isolation, plus delayed trips on the coolant pumps for the SCA, the target, and the secondary loop.

Alarms and trips will be discussed further in Sec. 3.5.

3.3 Instrument Channel System Architecture

Each redundant sensor for a particular parameter is powered from a separate, inverter-supplied instrument bus. Figure 9 shows the safety channel system architecture for PPS channels. This redundant circuitry is used only for the PPS instrument channels. There are three instrument busses labeled I, II, and III and there are, for each safety-related parameter, three independent sensors. Each sensor is connected to one of the three independent busses. However, the nuclear instrumentation has six flux sensors in each range. Two flux detectors are used per channel. The logic used for all the protection channels will be 1-out-of 6.

To maintain physical independence, three separate sets of cable trays and wire ways will be utilized with the necessary fire and external event protection. Normal power supply is in the form of a single electrical bus supplied by the line and transformer. Emergency back-up power is provided by three batteries, each connected to one of the three instrument busses and having a separate charger and inverter.

Both facility control and protection signals are developed from the same primary sensors. Isolation amplifiers are provided between control and protective functions such that a circuit failure of a control channel will not negate the effectiveness of a protection channel. There will be no on-line testing and calibration of the instrumentation systems during normal operation.

3.4 Basic PPS Block Structure

Figure 10 indicates how sensor information flows from the various facility systems, on the left, to the logic circuits, on the right, within each programmable local controller. The values of the output signals from the logic matrices determine whether any alarms are turned on and if the trips on the coolant pumps and confinement isolation are activated. The “Interlocks” boxes contain switches for each parameter that are open or closed, depending upon the condition mode of the facility. The specific block diagrams for each of the six condition modes are discussed below in Sec. 3.6. The logic circuits that implement the sections of these block diagrams for each system are discussed in Sec. 3.5.

3.5 Alarm/Trip Logic Circuits for Individual System Parameters

3.5.1 PPS Signal Numbering Conventions

A standardized signal numbering template has been generated to simplify construction of the logic models to be used in the programmable local controllers for each facility system. The template is presented in Fig. 11. Each transmitted signal that is fed into a logic model for comparison against alarm and trip levels is grouped with a set of input, logic, and output signals forming a logic block to determine if a trip or alarm signal needs to be sent. There are approximately forty logic blocks in the protection logic for the Plant Protection System (PPS) conceptual design, each of which uses the signal numbering template described below. These PPS logic blocks are illustrated in Figures 13-53. Note that the manual trip block (Fig. 52) does not follow the standardized signal numbering template.

Except for a few special cases, twenty consecutive signals were reserved for each PPS logic block, although all twenty are not necessarily needed. Those special cases include the high and low range flux, seismic, and all radiation monitor logic blocks, which were modified to have only ten consecutive signals assigned to each logic block. In addition, the manual trip block is very simple and is assigned only one signal that monitors whether or not the operator has transmitted the manual trip signal.

In the template, input signals are shown in red and output signals are shown in blue. Input signals include a transmitted signal input from the facility instrumentation (signal 0), four threshold levels (signals 1, 5, 9, and 13), a signal representing the integer zero, and one or two mode signals, which are discussed below. The only output signals are the high and low alarm and high and low trip signals, which are monitored by the PPS instrumentation.

All other signals, such as outputs from the AND or COMPARATOR blocks, are mathematical block output signals determined from one or more inputs and are shown in green. Each of the block signal types is discussed in the next section.

Signal 0 is first compared against the four threshold levels (signals 1, 5, 9, and 13), which represent the low trip, low alarm, high alarm, and high trip thresholds, respectively. Note that not all logic blocks have both alarms and both trips. If signal 0 is greater than signals 9 or 13 or lower than signals 1 or 5, the corresponding COMPARATOR block returns a ”1”. Each COMPARATOR outputs into an AND block. The other AND block input is a mode signal. A mode signal value of “1” indicates that the system is operating in a mode where the corresponding trip or alarm is active.

These AND blocks will return a “1” if the appropriate threshold level has been exceeded and the system is in the appropriate mode of operation. Otherwise, a “0” is returned. Signals 7 and 11 are monitored by the PPS instrumentation to determine if an alarm should be enacted.

Signals 3 and 15 are inputs into J-K FLIP FLOP blocks, with the other input set to an integer value of zero. The J-K FLIP FLOP blocks are initially set to “Off” (i.e., a value of zero). Once a J-K FLIP FLOP block is turned on, it remains on pending operator action. Signals 4 and 16, the outputs of the J-K FLIP FLOP blocks, are monitored by the PPS instrumentation to determine if a trip should be enacted.

Each alarm and trip signal is dependent on a mode signal to determine if it should be enabled or disabled. Alarms and trips may be active for one individual mode, all modes, or one of three subsets of modes. These three mode subsets are (a) Modes I, II, and IV, (b) Modes I, II, III, or VI, and IV, and (c) Modes II, III or VI, IV, and V. Each logic circuit reads input signals for each mode from the operator graphical user interface. A value of “1” for an individual mode signal indicates that the system is currently operating in that mode. At any given time, one of the six individual mode signals will read “1” while the remaining five will read ”0”.

Any PPS logic block trip or alarm that is active for some but not all modes checks a mode signal subset, i.e., signals 21, 22, and 25. Because several logic blocks are active for the same mode subsets, these subsets, illustrated in Fig. 12, are examined before the PPS logic blocks. For example, the SCA Flow High Trip is only active for Modes I, II, and IV. Instead of monitoring the individual mode signals in the SCA Flow High Trip Logic Block, signal 21 is monitored and returns a “1” if the system is currently in any of those modes and a “0” if it is not. Note that a high trip will always be active for the same modes as a high alarm, if one is present. This is also true for the low thresholds, but high and low thresholds are not guaranteed to be active for the same modes.

The general signal numbering template described above is applied to each of the PPS logic blocks. The ranges of signal numbers assigned to the PPS logic blocks are listed in Table 3. The signal numbers of a complete logic block are determined by adding the signal number of the transmitted input signal (generally the first number in the ranges listed in Table 2) to all signal numbers in Fig. 11. Using the SCA Flow example, the input signal is on signal 120, with the low trip, low alarm, high alarm, and high trip signals on signals 124, 127, 131, and 136, respectively. It should be noted that the appropriate signal assignments for ΔP Logic Blocks are dependent upon whether a ΔP cell measurement is available or two pressure measurements are provided.

The numbering scheme just described is not applied rigorously in all cases. Small changes have been implemented for some Logic Blocks, but the format described above has generally

been preserved. There are three common exceptions. First, if a low trip or alarm for a Logic Block is inactive for all modes, the signals corresponding to that trip or alarm are removed from the logic circuit. The same is also true for high alarms and trips. The second exception occurs when a trip or alarm is active for all modes. In this case, the Mode Signal and the corresponding AND block are deleted, as they are no longer required. The third exception was mentioned above for the Logic Blocks that are modified for fewer than twenty signals.

In both the PPS and PCS logic circuits, several mathematical blocks are utilized; their conventions are described below. These include: AND, COMPARATOR, NOT, OR, SUMMER, MULTIPLIER, J-K FLIP FLOP, DIFFERENTIATOR, and MAXIMUM VALUE. The AND block accepts two inputs. If both are greater than zero, the block returns a value of ”1”. Otherwise, it returns a value of ”0”.

Table 3. PPS Logic Block Signal Numbering

Accelerator/Neutron Flux		Fuel Storage Pool	
70-79	High-Range Flux	560-579	Leak
80-89	Low-Range Flux	580-599	Pool Level
		600-619	Pool Temperature
SCA		Radioactive Waste Tank	
100-119	Outlet Temperature	620-639	Leak
120-139	Flow	640-659	Pool Level
140-159	Leak	660-679	Pool Temperature
160-179	ΔT		
180-199	Pressure	Confinement	
200-219	Pump ΔP	680-699	Air Lock Position
220-239	Tank Level	700-719	Air Pressure
240-259	Tank Temperature	720-739	Top Shield Position
850-879	Tank Supplemental Coolant Reservoir Valve		
Target		Plant-Wide Sensors - Radiation Monitors	
260-279	Outlet Temperature	740-749	Shield Air
280-299	Flow	750-759	Building
300-319	ΔT	760-769	Surge Tank Cover Gas
320-339	Pressure	770-779	H_2O
340-359	Pump/Target ΔP	780-789	Stack
360-379	Surge Tank Level		
Secondary		Other Plant-Wide Sensors	
380-399	Pressure	90-99	Seismic
400-419	Pump ΔP	1645	Manual Trip
420-439	SCA Outlet Temperature		
440-459	SCA Flow		
460-479	SCA ΔT		
480-499	Target Outlet Temperature		
500-519	Target Flow		
520-539	Target ΔT		

3.5.2 Commonly Used Mathematical Blocks

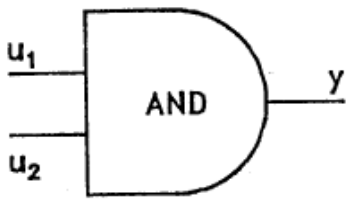

$y = 1$ $\quad u_1 > 0,\ u_2 > 0$

$y = 0$ $\quad$ otherwise

The COMPARATOR block accepts two inputs, u_1 and u_2. If u_1 is greater than or equal to u_2, the block returns a value of ”1”. Otherwise it returns a value of ”0”.

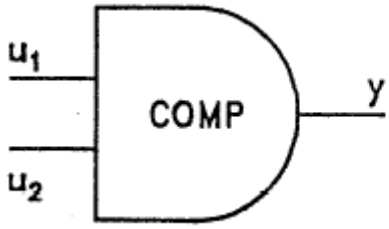

$y = 0$ $\quad u_1 < u_2$

$y = 1$ $\quad u_1 \geq u_2$

A NOT block accepts one input. Any input value greater than zero returns a value of”0”. Otherwise a value of “1” is returned.

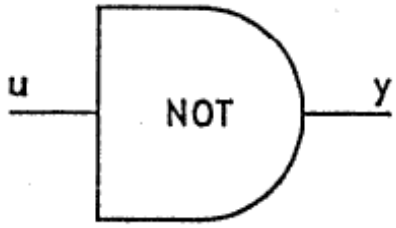

$y = 1$ $\quad u \leq 0$

$y = 0$ $\quad u > 0$

An OR block accepts two inputs. If both inputs are less than or equal to zero, the block returns a ”0”. Otherwise a “1” is returned.

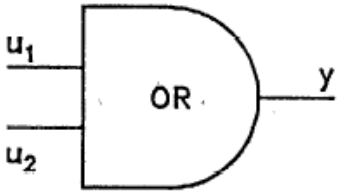

$y = 0$ $\quad u_1 \leq 0,\ u_2 \leq 0$

$y = 1$ $\quad$ otherwise

The SUMMER block uses two input signals, u_1 and u_2, and three scaling factors, g, g_1 and g_2.The input signals and scaling factors are used as illustrated in the equation in the figure immediately below.

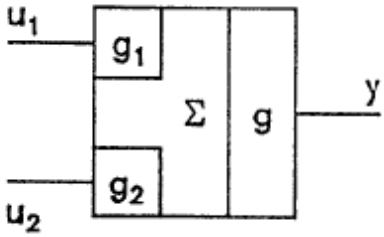

$$y = g(g_1u_1 + g_2u_2)$$

The MULTIPLIER block uses two input signals, u_1 and u_2, and a single scaling factors, g. The MULTIPLIER calculates the product of the two input signals and the scaling factor.

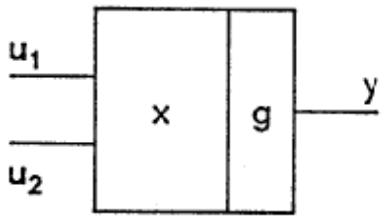

$$y = g u_1 u_2$$

The J-K FLIP FLOP block is used to keep trip signals latched. The J-K FLIP FLOP accepts two inputs, u_1 and u_2, and an initial value Q_0. If u_1 is greater than zero and u_2 is not, the J-K FLIP FLOP returns a value of "0". If u_1 is less than or equal to zero and u_2 is positive, the J-K FLIP FLOP returns a value of "1". If both u_1 and u_2 are less than or equal to zero, the previously returned value is output. In other words, the output value is latched. For PPS Logic Blocks, an inactive trip will remain inactive until a measured signal exceeds a certain threshold. If the measured signal drops below the threshold, the J-K FLIP FLOP will maintain the previous value, which was for an activated trip. This latching feature is also used for the tank water level controllers discussed below in Sections 4.3 and 4.4.

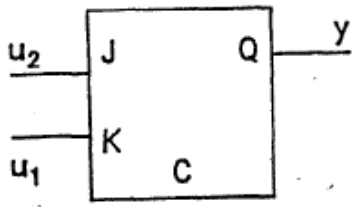

$$y^{n+1} = Q^n \qquad u_1 \leq 0,\ u_2 \leq 0$$
$$y^{n+1} = 0 \qquad u_1 > 0,\ u_2 \leq 0$$
$$y^{n+1} = 1 \qquad u_1 \leq 0,\ u_2 > 0$$

The DIFFERENTIATOR logic block uses one input signal, u, and a single scaling factor g. The DIFFERENTIATOR calculates the difference between the input signal's current value and its value during the previous time step. The output of this logic block is the result of the derivative multiplied by the scaling factor, g.

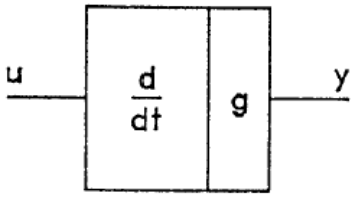

$$y = g \frac{d}{dt} u$$

The MAX block accepts two input signals, u_1 and u_2, and outputs the larger value.

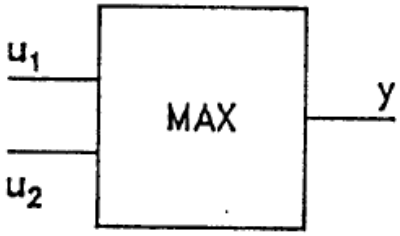

$$y = \max(u_1, u_2)$$

3.5.3 Neutron Flux

The active alarms and trips for the neutron flux logic blocks are illustrated in Table 4. These logic blocks are presented in Figs. 13 and 16. There is no active low alarm and trip for either flux range except a low alarm and trip are active for the high-range flux only for Mode I. The Negative Flux Rate detects an abnormally fast rate of decrease in the neutron flux, alarms, and trips the facility off-line. The Sector Neutron Flux Ratio compares the ratios of both the highest and the lowest neutron detector fluxes to the average flux value to a specified radial tilt factor, alarms, and trips the facility off-line if there is a significant skew in the SCA neutron flux distribution. During Mode I, the six detector flux signals are available and used. For all other modes, the three detector flux signals are available and used from the low-range flux detectors. The sector alarm and trip are included to respond to anomalies in the alignment of the electron beam bombarding the target.

Table 4. Neutron Flux Alarms and Trips

Parameter	Low Alarm and Trip					High Alarm and Trip				
	I	II	III/V	IV	V	I	II	III/VI	IV	V
High-Range Neutron Flux	Yes					Yes	Yes	Yes	Yes	Yes
Low-Range Neutron Flux							Yes	Yes	Yes	Yes
Negative Neutron Flux Rate						Yes	Yes			
Sector Neutron Flux Ratio						Yes	Yes			

3.5.4 Seismic

The active alarms and trips for the seismic logic blocks are illustrated in Fig. 17 and summarized in Table 5.

Table 5. Seismic Alarms and Trips

Parameter	Low Alarm					High Alarm and trip				
	I	II	III/VI	IV	V	I	II	III/VI	IV	V
Seismic						Yes	Yes	Yes	Yes	Yes

3.5.5 SCA Cooling System

Eight logic blocks constitute the SCA cooling system logic. Those SCA logic blocks, which are illustrated in Figs. 18-25, monitor measurements of tank level, flow, pressure, pump ΔP, outlet temperature, SCA ΔT, SCA leak, and tank temperature to determine if a system trip or alarm should be activated.

The signal numbering template described in Section 3.5.1 was used to generate a set of signals for processing the measurement data. Table 6 illustrates the modes for which each alarm and trip is active. Except for the tank-top water temperature logic block during Mode I operation, a high alarm and high trip are active for all logic blocks when the system is in Modes II, III, IV, V, and VI. The tank level logic block is the only one to have an active low alarm and low trip for all

six modes. The flow, pump ΔP, and tank level logic blocks are the only ones to have low alarms or trips for mode I.
Each of the eight measurements in the SCA cooling system is input into a COMPARATOR block to determine if a measured input signal has gone beyond a threshold value. AND blocks are used to determine if the system is operating in a mode for which a trip or alarm is active and if a threshold value has been crossed. Because the trip output signal must remain active even if the measured signal crosses back to the safe side of the threshold, a J-K FLIP FLOP block is employed to latch the output signal pending operator action. The output for each alarm and trip signal is either active, a "1", or inactive, a "0."

Table 6. SCA Cooling System Alarms and Trips

Parameter	Low Alarm and Trip					High Alarm and Trip				
	I	II	III/VI	IV	V	I	II	III/VI	IV	V
Outlet Temperature						Yes	Yes	Yes	Yes	
Flow	Yes					Yes	Yes	Yes	Yes	
Leak						Yes	Yes	Yes	Yes	Yes
ΔT						Yes	Yes	Yes	Yes	
Pressure						Yes	Yes	Yes	Yes	
Pump ΔP	Yes					Yes	Yes	Yes	Yes	
Tank Level	Yes	Yes	Yes	Yes	Yes	Yes	Yes	Yes	Yes	Yes
Tank-Top Water Temperature							Yes	Yes	Yes	Yes

If the water level in the SCA tank drops below the low trip level, makeup water from the supplemental coolant reservoir is added to the tank by opening the supplemental coolant reservoir valve. The valve is automatically opened by the plant control system through the logic block illustrated in Fig. 62. The logic block monitors the output from signal 222, which is the unlatched SCA tank low-level trip signal shown in Fig. 25, and opens the supplemental coolant reservoir valve if the level falls below the low level trip value. To ensure that too much water is not added to the tank, the same logic circuit also monitors signal 234, the unlatched SCA tank high-level trip signal shown in Fig. 25, and closes the valve if the water level exceeds the high-level trip value. A full discussion of how these trip signals are used to control the supplemental coolant reservoir valve is provided below in Section 4.2.

3.5.6 Target Cooling System

Six logic blocks comprise the target cooling system logic. Those logic blocks, which are illustrated in Figs. 26-31, monitor measurements of surge tank level, flow, pressure, pump ΔP, outlet temperature, and ΔT across the target to determine if a system trip or alarm should be activated.

The active alarms and trips for the target cooling system logic blocks are presented in Table 7. Note that all alarms and trips of the target cooling system are disabled when the facility is in mode V.

Table 7. Target Cooling System Alarms and Trips

Parameter	Low Alarm and Trip					High Alarm and Trip				
	I	II	III/VI	IV	V	I	II	III/VI	IV	V
Surge Tank Level	Yes	Yes	Yes	Yes		Yes	Yes	Yes	Yes	
Flow	Yes					Yes	Yes	Yes	Yes	
Pressure	Yes	Yes	Yes	Yes		Yes	Yes	Yes	Yes	
Pump ΔP	Yes					Yes	Yes	Yes	Yes	
Outlet Temperature						Yes	Yes	Yes	Yes	
ΔT						Yes	Yes	Yes	Yes	

3.5.7 Secondary Cooling System

Eight logic blocks, illustrated in Figs. 32-39, monitor the secondary loop parameters, flow rate through the SCA on the secondary side, pressure, pump ΔP, SCA outlet temperature on the secondary side, ΔT across the SCA on the secondary side, target outlet temperature on the secondary side, flow through the target on the secondary side, and ΔT across the target on the secondary side to determine if a system trip or alarm should be activated.

The active alarms and trips for the secondary cooling system logic blocks are summarized in Table 8. As with the target cooling system, all alarms and trips are disabled when the facility is in mode V.

3.5.8 Storage Pool Coolant System

Three logic blocks make up the storage pool coolant system logic. They are diagrammed in Figs. 40-42 and monitor measurements of pool leakage, pool water level, and pool water temperature to determine if a system trip or alarm should be activated.

High alarms and trips for all three parameters are active in all six facility condition modes. Low alarm and trip is active only for the pool level and is active in all six modes. The alarms and trips are summarized in Table 9.

Table 8. Secondary Cooling System Alarms and Trips

Parameter	Low Alarm and Trip					High Alarm and Trip				
	I	II	III/VI	IV	V	I	II	III/VI	IV	V
Secondary Pressure						Yes	Yes	Yes	Yes	
Secondary Pump ΔP	Yes					Yes	Yes	Yes	Yes	
Secondary SCA Outlet Temperature						Yes	Yes	Yes	Yes	
Secondary SCA Flow	Yes					Yes	Yes	Yes	Yes	
Secondary SCA ΔT						Yes	Yes	Yes	Yes	
Secondary Target Outlet Temperature						Yes	Yes	Yes	Yes	
Secondary Target Flow	Yes					Yes	Yes	Yes	Yes	
Secondary Target ΔT						Yes	Yes	Yes	Yes	

Table 9. Storage Pool Alarms and Trips

Parameter	Low Alarm and Trip					High Alarm and Trip				
	I	II	III/VI	IV	V	I	II	III/VI	IV	V
Storage Pool Leak						Yes	Yes	Yes	Yes	Yes
Storage Pool Level	Yes	Yes	Yes	Yes	Yes	Yes	Yes	Yes	Yes	Yes
Storage Pool Temperature						Yes	Yes	Yes	Yes	Yes

3.5.9 Radioactive Waste Tank

Similar to the arrangement for the storage pool, three logic blocks comprise the radioactive waste tank logic. These logic blocks are diagrammed in Figures 43-45 and monitor measurements of tank leakage, tank water level, and tank water temperature to determine if a system trip or alarm should be activated.
As with the fuel pool, high alarms and trips for all three parameters are active in all six facility condition modes. Low alarm and trip is active only for the tank level and is active in all six modes. The alarms and trips are summarized in Table 10.

Table 10. Radioactive Waste Tank Alarms and Trips

Parameter	Low Alarm and Trip					High Alarm and Trip				
	I	II	III/VI	IV	V	I	II	III/VI	IV	V
Tank Leakage						Yes	Yes	Yes	Yes	Yes
Tank Water Level	Yes	Yes	Yes	Yes	Yes	Yes	Yes	Yes	Yes	Yes
Tank Water Temperature						Yes	Yes	Yes	Yes	Yes

3.5.10 Confinement

The PPS uses three logic blocks to monitor air lock position, top shield position, and confinement air pressure in order to determine when an alarm or trip should be activated to close the confinement. These blocks are presented in Figs. 46-48. In the cases of the air lock position and shield position, the “high” position corresponds to fully closed and the “high” alarm and trip indicate that the air lock or the shield has opened in a facility condition mode when it should be closed.

All three parameters are monitored for high alarm and trip only, and the alarms and trips are enabled only when the facility is in modes I through IV and VI, since the shield must be open in Mode V, when plant maintenance work or work on the target is being performed. The alarms and trips are summarized in Table 11.

Table 11. Confinement Alarms and Trips

Parameter	Low Alarm and Trip					High Alarm and Trip				
	I	II	III/VI	IV	V	I	II	III/VI	IV	V
Air Lock Position						Yes	Yes	Yes	Yes	
Top Shield Position						Yes	Yes	Yes	Yes	
Confinement Air Pressure						Yes	Yes	Yes	Yes	

3.5.11 Radiation Monitoring

Five logic blocks comprise the radiation monitoring logic. These logic blocks are diagrammed in Figs. 49-53 and monitor radiation measurements of shield air, the building, the surge tank cover gas, water, and the stack to determine if a system trip or alarm should be activated.

All three parameters are monitored for high alarm and trip only, and all the alarms and trips are enabled for all six facility condition modes. Table 12 summarizes these alarms and trips.

Table 12. Radiation Monitoring Alarms and Trips

Parameter	Low Alarm and Trip					High Alarm and Trip				
	I	II	III/VI	IV	V	I	II	III/VI	IV	V
Shield Air						Yes	Yes	Yes	Yes	Yes
Building						Yes	Yes	Yes	Yes	Yes
Surge Tank Cover Gas						Yes	Yes	Yes	Yes	Yes
Water						Yes	Yes	Yes	Yes	Yes
Stack						Yes	Yes	Yes	Yes	Yes

3.5.12 Manual Trip

The manual trip signal, signal 1645 in Figure 54, tracks whether or not the operator has pressed the manual trip button on the GUI. When the manual trip signal is seen by the logic model, the actuators needed to trip the system are activated.

3.6 PPS Block Structure for the Six Facility Modes

The PPS block configuration is different for each of the six condition modes due to differences in the specific interlocks for each mode, as mentioned in Sec. 3.4. Various combinations of signals from the nuclear instrumentation, the process thermal-hydraulic (T-H) instrumentation, and the radiation monitors are involved in each mode. Note that the manual trip is enabled for all six modes.

3.6.1 Mode I – Operating

Figure 55 shows the details of the interlocks for each system when the facility is in normal operating mode. Alarm and trip logic circuits for nearly all parameters are enabled (relays are closed, as indicated by a diagonal line across the relay)

3.6.2 Mode II – Testing/Calibration

When the facility is undergoing testing or calibration, the interlock configuration is very similar to, but not identical to, the configuration during operation, as shown in Fig. 56. Several alarms/trips, such as secondary target flow and pump ΔP are disabled to prevent false alarms and trips. Note also that the SCA, target, and secondary coolant pump trips are inactive in this mode.

3.6.3 Mode III – Shutdown

When the facility is in shutdown condition, most, but not all, parameter alarms and trips are still enabled; the interlock configuration is diagrammed in Fig. 57. The SCA, target, and secondary coolant pump trips, as well as the accelerator trip, are inactive in this mode because these components are already shut down.

3.6.4 Mode IV – Loading/Unloading

Figure 58 presents the interlock configuration when the SCA is undergoing loading or unloading.

3.6.5 Mode V – Plant Maintenance/Target Replacement

Nearly all parameter PPS logic circuits, other than those for the radioactive waste tank and storage pool tank, are disabled in this mode, as indicated in Fig. 59. As discussed in Sec. 3.5.10, this is the only mode in which the confinement alarms and trips must be disabled. This must be done in order to allow plant maintenance work or target replacement.

3.6.6 Mode VI – Plant Unattended

When the facility is in plant unattended mode, the PPS block structure is the same as for Mode III, the shutdown mode.

4 PLANT CONTROL SYSTEM CONCEPTUAL DESIGN

The objective of the plant control system is to aid the operator in establishing and maintaining system conditions within the specified operating limits (technical specifications) during the steady state of normal operation. The PCS provides the operator with the monitoring instrumentation information covering all the required input and control parameters of the systems and also provides the operator with the capability for automatic or manual control of the systems. The operator can constrain operational transients so as to preclude facility trip and reestablish steady state operation.

The plant control system is maintained as a separate and distinct circuit from the plant protection system with electric isolation. The plant control system receives the plant process signals that are also monitored by the PPS through isolation amplifiers. This ensures that there is no feedback from the control system to the protection system. Two separate groups of components and structures will be used to house the two sets of controllers in the form of PLCs and plant computers, as discussed above in Sec. 3.3. Permissive signals are also provided to allow automatic or manually initiated interlocks and bypasses.

The PCS controls most components through manual signals from the operator, as discussed in Sec. 4.1. The two exceptions are automatic controllers for the SCA tank water level and the storage pool water level; these are described in Sections 4.3 and 4.4.

4.1 PCS Signal Numbering

The ranges of signal numbers assigned to each PCS logic block are listed in Table 13. As with the PPS, blocks with complex logic circuits (valve, shield, and the tank level controllers) are allocated twenty signal numbers. Simple blocks (pump, blower, and fuel arm) are allocated only five signal numbers

Table 13. PCS Logic Block Signal Numbering

Components		Tank Level Controllers	
790-809	Valve – manual only	50-69	SCA
810-829	Shield	540-559	Fuel Pool
835-839	Blower		
840-844	Fuel Arm		

4.2 Component Control Logic Diagrams

Figure 60 illustrates the logic used for opening and closing the top shield. The shield receives two signals: MSC and MSO. MSC is the manual signal from the operator to close the shield, and a value of 1 signifies closing of the shield, while a value of 0 means do not close the shield. MSO is the manual signal from the operator to open the shield; a value of 1 signifies opening of the shield, while a value of 0 means do not open the shield. These two operator signals are combined into one signal 803, which can have three values: 1 (close the shield), 0 (do nothing), or -1 (open the shield). However, action as a result of these instructions is not always possible due to interlocks imposed to prevent unwanted top shield movement.

Top shield movement is only possible when the shield operation mode, signal 813, is set to manual. In disabled mode, the top shield will always maintain its current position. The operator may send instructions to open or close the top shield, but in disabled mode these will have no result.
When the top shield is in manual operation mode, the signals to open and close the top shield do not necessarily result in top shield movement. For example, if the shield is already fully open, the shield cannot open any further so an open signal is ignored. This case is covered by the signal 816 COMPARATOR, which compares the fully open position of C_1 with the current shield position, SP. If the two are equal and a value of “-1” (open) is sent through signal 803 MS, then the end result is that the shield will maintain its current position, regardless of any other signals. The same is true for a close signal when the shield is fully closed.

One final engineered safety feature for the top shield position is the Emergency Stop Signal (ESS) on signal 815. When this signal is active, a value of “1” causes all top shield movement to stop automatically. This is true for all cases regardless of any other signal.

Figure 61 illustrates the logic used for manually opening and closing a valve. With the exception of the emergency stop signal, which is not included in the logic block for valves, this logic is very similar to the logic for the top shield position.

Figure 62 illustrates additional logic appended onto the generic logic of Fig. 61 for the specific valve used with the supplemental coolant reservoir. These additional signals account for automatic opening and closing of the supplemental coolant reservoir valve to refill or cease filling of the SCA tank. Signals 222 and 234 are the unlatched low and high tank level trip signals for the SCA tank level PPS logic block, respectively. In Fig. 62, if either trip threshold is crossed, either signal 222 or 234 will have a value of “1”. This produces a value of “0” for signal 868 and therefore for signal 869 also, thus overriding the value of signal 867. This means any manual valve signals from the operator will be overridden until the tank water level moves back past the trip threshold and the trip is reset. If the low SCA tank level trip signal was sent, signal 877 will be set to a value of “-1” and if the high SCA tank level trip signal was sent, signal 877 will be set to a value of “1”. The COMPARATOR, NOT and AND signals on signals 870-873 and 875-876

are used to check if the valve is already in the intended position. For example, when the tank level low trip threshold is crossed, the valve should open. Once the valve is opened, it should maintain its position, not open further. Therefore, signal 872 and thus signals 873 and 874 will all be "0". The same is true for closing the valve when it is already in the closed position. The value of signal 877 is then added to signal 869, which has a value of “0”, to enforce the appropriate supplemental coolant reservoir valve position.

The logic for the pump, blower and fuel arm controllers is far simpler than for the shield and valve controllers (see Figs. 63-65). Like the manual trip logic, a logic model block watches for a signal from the operator through the GUI. When an action signal is sent, that signal is immediately sent to the actuator needed to perform that action. There are no interlocks in the logic model to prevent controller action.

4.3 Subcritical Assembly Tank Level Controller

A schematic drawing of the SCA tank water level controller is presented in Fig. 66. The controller keeps the water level within an upper and a lower bound and initiates an alarm if the level falls too low or rises too high. It will trip the facility if the water level exceeds a high or a low trip threshold. The controller can be overridden by the operator and placed in manual mode if required. For normal makeup and let-down (due to small leaks and evaporation), the makeup valve for the controller is V-57, while the letdown valve for the controller is V-53. V-57 controls the flow from the Makeup tank into the SCA tank while V-53 controls the flow out from the SCA tank to the Drain tank. Figure 66 shows that the makeup valve V-57 is under ON-OFF control. If the water level drops below the LOW set point (C1), V-57 will be opened, and the tank water level will begin to rise. There is a latching feature that keeps V-57 open and water flowing into the tank as the water level rises, until the level reaches the HIGH set point (C_2). The latching feature then latches this signal and keeps V-57 closed unless the water level drops below the LOW set point again. Fig. 66 indicates shows that the letdown valve V-53 is also under ON-OFF control. If the water level rises above the HIGH set point, V-53 will be opened, and the tank water level will begin to fall. There is a latching feature that keeps V-53 open and water flowing out of the SCA heat transport system, and therefore out of the SCA tank as the water level falls until the level reaches the LOW set point (C_1). The latching feature then latches this signal and keeps V-53 closed unless the water level rises above the HIGH set point again.

Additional details regarding the various coolant system alignments that should be in place for the proper operation of the level controller in Fig. 66 are available in the facility design document of the cooling system. When the Clean-up system is not running, valve V-51 (which connects the Clean-up system to the main heat transport loop) is closed to permit letdown to proceed. Valves V-52 and V-62 downstream of the demineralizer must be opened for letdown alignment. To avoid hunting between the makeup valve and the letdown valve, the makeup valve should actually close at some value lower than HIGH and the letdown valve should actually close at some value higher than LOW. The actual values will have to be determined by the details of the design of the thermal-hydraulic system and the under shoots or overshoots.

Figure 66 also illustrates the automatic closing or opening of the supplemental coolant reservoir valve
V-73 in the event of a high or low tank level trip, respectively. This is for accident conditions (medium to large leaks). The valve V-73 is opened automatically to refill the SCA tank if the tank level drops too low. The valve is closed automatically to stop filling of the SCA tank if the level rises too high.

The controller logic circuit that implements these actions is diagrammed in Figs. 67 and 68. In Fig. 67 for the makeup valve V-57 controller, the two COMPARATOR blocks determine whether the valve should be opened, allowing water to enter and add to the tank water inventory. If the water level drops below the LOW set point (C_1), the valve will be opened, and the tank water level will begin to rise. The J-K FLIP FLOP block provides the latching feature that keeps the pump on and water flowing into the tank as the water level rises, until the level reaches the HIGH set point (C_2). The J-K FLIP FLOP then latches this signal and keeps the valve closed unless the water level drops below the LOW set point again. Figure 68 shows the equivalent logic circuit for the letdown valve V-53 controller.

Unless the operator chooses manual override, this SCA tank level controller will be in automatic mode for all plant operation modes.

4.4 Storage Pool Level Controller

The schematic and logic circuit drawings for the storage pool water level controller are presented in Figs. 69 and 70. The schematic drawing in Fig. 69 indicates that the controller will keep the water level within an upper and a lower bound and initiate an alarm if the level falls too low or rises too high. It will trip the facility if the water level exceeds a high or a low trip point. The controller can be overridden by the operator and placed in manual mode if required. Draining the pool will require manual action. The controller logic circuit that implements these actions is diagrammed in Fig. 70. The two COMPARATOR blocks determine whether or not the pump motor should be turned on and allow water to enter and add to the tank water inventory. If the water level drops below the ON set point (C_1), the pump will turn on, and the tank water level will begin to rise. The J-K FLIP FLOP block provides the latching feature that keeps the pump on and water flowing into the tank as the water level rises, until the level reaches the OFF set point (C_2). The J-K FLIP FLOP then latches this signal and keeps the pump off unless the water level drops below the ON set point again.

5 PLANT PROCEDURES OUTLINE

Automation will be provided for eight plant control procedures:

1. Starting the facility up (Mode I or II)
2. Shutting the facility down (Mode III)
3. Entering Mode IV
4. Exiting Mode IV
5. Entering Mode V
6. Exiting Mode V
7. Entering Mode VI
8. Exiting Mode VI

The interlock diagrams for these eight procedures are presented in Figs. 71-78, which summarize the logic for each of the eight.

As discussed in Sec. 2.4, six facility modes have been identified. Operator procedures guide the facility operator in entering and exiting each mode. In essence, those procedures enable the operators to take the facility from one mode to another. These eight procedures will be partially automated, since they are the major procedures. Procedure 1 will take the facility from Mode III to either Mode I or Mode II. This is the start-up procedure that enables the operators to take the

facility from the Shutdown mode to either the Operating mode or the Low-Power Testing/Calibration Mode. Procedure 2 is the shutting-down procedure; it is the reverse of Procedure 1 and takes the facility from either the Operating mode or the Low-Power Testing/Calibration Mode to the facility Shutdown mode, i.e., going from Mode I or Mode II to Mode III. Procedure 3, which is the Entering-Mode IV procedure, means precisely that. Using this procedure will take the facility from Mode III into Mode IV, that is, from the Shutdown mode into the Loading/Unloading Mode. Exiting Mode IV and returning to Mode III is carried out by following Procedure 4, which is the Exiting-Mode IV procedure. Procedures 5 and 6 are analogous to Procedures 3 and 4. Following Procedure 5 takes the facility from Mode III into Mode V. This is the Entering-Mode V procedure and moves the facility from the shutdown mode into the Plant Maintenance/Target replacement mode. To go back into Mode III from Mode V means following Procedure 6. This is the Exiting-Mode V procedure. The facility is returned to the Shutdown Mode from the Plant Maintenance/Target Replacement Mode. It can be seen that Mode III (Shutdown Mode) is the interim-mode between all the other modes and is of short-term duration for the facility when it is being taken into the other longer term modes. In contrast, Mode VI (Plant Unattended Mode) is the long-term mode between all the other modes; it is of long-term duration when the plant staff departs the facility premises and the facility is left unattended for a relatively long period of time. The facility enters Mode VI from Mode III using Procedure 7, which is the Entering-Mode VI procedure. Once the plant staff returns, the facility can be taken back into Mode III through the use of Procedure 8, which is the Exiting-Mode VI procedure for the facility.

An operator procedure is composed of a sequence of operator actions that start or shut off components, realign thermal-hydraulic systems, and enable or disable interlocks to go from one facility mode to another facility mode. In the process of doing so, instrumentation must to be monitored to ensure that the required ranges and specifications have been met before the next action can be taken. In the case of Procedures 1 to 8, a degree of automation has been implemented so that the plant computer and the human operator take complementary actions to verify that the appropriate sequence has been followed. This is carried out through the operator graphic user interface (GUI) and the sequence of interlocks implemented in the EPICS software on the plant computer. The description of the operator GUI with its “point-and-click” facility system PCS/PPS panels is presented in Section 6. The sequence of interlocks and the logic diagrams for Procedures 1 to 8 is described below.

Common to the logic of the automation of each procedure is that:

(a) Components and systems must be started or shut down in a time-ordered series of actions so that failure in any stage of the sequence will lead to minimal adverse effects on the other components and systems. This requires logic interlocks based upon instrumentation readings.
(b) As assumed in Sec. 2.4, each facility mode has its own function requirements for the use of the major facility systems. This is shown in Table 1, and together with (a) impacts the logic of the sequence interlocks.
(c) Manual operator confirmation will be required at key stages in the sequence before the automated sequence will be allowed to proceed further. This requires an operator manual “OK” button in the sequence logic.
(d) As discussed in Sec. 3.6, each facility mode has a specific PPS block structure. The sequence logic will therefore require a path to switch between PPS blocks. Various combinations of trips must be disabled or enabled, depending upon the specific facility mode.

(e) Once a specific mode has been entered, the consequences of potential human error will be minimized by disabling the possibility for certain operator actions to adversely affect the facility. This requires that certain interlocks be enabled in the operator GUI after the specific mode has been entered.
(f) Certain manual actions must be taken by the operators to prepare the system before the change in facility mode can be initiated.

The following information is provided in the order of procedure number. It should be stated that in the single-line diagrams shown below, the RESET button is used only to reset logic switches to the initial switch positions. This initializes the sequence logic for the next cycle.

5.1 Procedure 1: Starting the Facility

In accordance with the outline above, Table 14 shows the sequence of system condition interlocks that must be satisfied and the system actions that can be subsequently taken by each stage of the start-up procedure and by the major systems involved to take the facility from Mode III to Mode I. Before the sequence in Table 13 is initiated, all preparatory actions should have been carried out by the operators. These include the makeup for the SCA vessel water level and the target surge tank water level. The various coolant system alignments that must be in place for the proper operation of these systems are part of the preparatory actions that need to be carried out before the sequence can be initiated.

Table 14. Start-up Mode I

Stage	System	IF Condition	THEN Action
Upon operator selection of Start-Up Mode I button			
I	Confinement Alignment	If the operator issues a manual OK. If the SCA top shield position indicator signals closure. If the confinement airlock position indicator signals closure. If the confinement building air pressures meet the requirements for sub-atmospheric operation. If the confinement building radiation levels are less than the allowed limits.	Then the SCA top shield is closed. Then the confinement air lock is closed. Then the confinement vent blower is adjusted. Then the confinement building radiation levels are checked. Then the automated procedure asks for operator manual confirmation to proceed to Stage II.
II	Secondary Coolant	If ambient temperature is greater than the minimum allowable temperature and less than the maximum allowable temperature. If the air blower power of the cooling towers has reached the operating threshold and the air blowers have been running for longer than the time requirements. If the secondary coolant flow rate has reached the requirements for the secondary heat transport system.	Then the air blowers of the cooling tower are started in the secondary heat transport system. Then the valves in the secondary heat transport system are aligned for start of secondary coolant flow. Then the secondary coolant system radiation levels are checked.

		If the secondary coolant radiation levels are less that the allowed limits. In this stage, both the target/SCA and Accelerator secondary loops are started	Then the automated procedure asks for operator manual confirmation to proceed to Stage III.
III	SCA Coolant	If the operator issues a manual OK.	Then the valves in the SCA heat transport system are aligned for start of SCA coolant flow.
		If the valves in the SCA coolant system are positioned correctly.	Then the pump in the SCA heat transport system is started.
		If the SCA coolant flow rate has reached the requirement for the SCA heat transport system.	Then the SCA coolant system radiation levels are checked.
		If the secondary coolant radiation levels are less than the allowed limits.	Then the automated procedure asks for operator manual confirmation to proceed to Stage IV.
IV	Target Coolant	If the operator issues a manual OK.	Then the cover gas pressure in the target coolant system surge tank is checked.
		If the cover gas pressure in the surge tank is within limits.	Then the valves in the target heat transport system are aligned for start of target coolant flow.
		If the valves in the target coolant system are positioned correctly.	Then the pump in the target heat transport system is started.
		If the target coolant flow rate has reached the requirements for the target heat transport system.	Then the target coolant system radiation levels are checked.
		If the target coolant radiation levels are within the allowed limits.	Then the automated procedure asks for operator manual confirmation to proceed to Stage V.
V	Accelerator/Neutron Power	If the operator issues a manual OK.	Then the accelerator is started up in accordance with the procedures for the accelerator operation.
		If the accelerator has been started.	Then the neutron flux level is checked.
		If the neutron flux level signal is in the Mode I range of power.	Then the operator switches the PPS to Mode I.
		If the operator is satisfied that all Mode I actions have been carried out and that the operating parameters are within Mode I ranges.	Then the operator issues a manual OK for Mode I status.

IV	Lockout	If the operator issues a manual OK for Mode 1 status	Then the following GUI buttons are locked out to operator actions. – Target Coolant Pump OFF – Target Coolant Valves CLOSE – SCA Coolant Pump OFF – SCA Coolant Valves CLOSE – Secondary Coolant Pump OFF – Secondary Coolant Valves CLOSE – Top SCA Shield OPEN – Air Dump HX Blower OFF

Figure 71 shows the single-line diagram depiction of Table 14. The analogous table for starting up from Mode III and taking the facility to Mode II instead of Mode I is shown below as Table 15. The differences in the automated procedures are due to the differences in system operating requirements for the two modes, as shown in Table 1.

Table 15. Start-up Mode II

Stage	System	IF Condition	THEN Action
Upon operator selection of Start-Up Mode II button			
I	Confinement Alignment	If the operator issues a manual OK. If the SCA top shield position indicator signals closure. If the confinement airlock position indicates signals closure. If the confinement building pressures meet the requirements for sub-atmospheric operation. If the confinement building radiation levels are less than the allowed limits.	Then the SCA top shield is closed. Then the confinement air lock is closed. Then the confinement vent blower is adjusted. Then the confinement building radiation levels are checked. Then the automated procedure asks for operator manual confirmation to proceed to Stage II.
II	Accelerator Secondary Coolant	If ambient temperature is greater than the minimum allowable temperature and less than the maximum allowable temperature. If the air blower power of the cooling towers has reached the operating threshold and the air blowers have been running for longer than the time requirements.	Then the air blowers of the cooling tower are started in the secondary heat transport system. Then the valves in the secondary heat transport system are aligned for start of secondary coolant flow.

		If the secondary coolant flow rate has reached the requirements for the secondary heat transport system. If the secondary coolant radiation levels are within the allowed limits.	Then the secondary coolant system radiation levels are checked. Then the automated procedure asks for operator manual confirmation to proceed to Stage III.
III	Accelerator/Neutron Power	If the operator issues a manual OK. If the accelerator has been started. If the neutron flux level signal is in the Mode II range of low power.	Then the accelerator is started up in accordance with the procedures for the accelerator operation. Then neutron flux level is checked. Then the operator switches the PPS to Mode II.
		If the operator is satisfied that all Mode II actions have been carried out and that the operating parameters are within Mode II ranges.	Then the operator issues a manual OK for Mode II status.
IV	Lockout	If the operator issues a manual OK for Mode II operating status	Then the following GUI buttons are locked out to operator action – Secondary Coolant Pump OFF – Secondary Coolant Valves CLOSE – Top SCA Shield OPEN

5.2 Procedure 2: Shutting the Facility Down

This is the reverse of Sec. 5.1. To take the facility from Mode I back into Mode III requires the sequence shown below in Table 16. As in the case of Procedure 1, before the sequence in Table 16 is initiated, all preparatory actions should have been carried out by the operators.

Table 16. Shut Down Mode III from Mode I

Stage	System	IF Condition	THEN Action
Upon operator selection of Shutting-Down Mode III button			
I	Accelerator/Neutron Power	If the accelerator conditions allow. If the neutron flux level signal is at shutdown levels. If the PPS has been switched to Mode III.	Then the accelerator is shut down in accordance with the procedures for accelerator operation. Then the operator switches the PPS to Mode III. Then the automated procedure asks for operator manual confirmation to proceed to Stage II.
II	Target Coolant	If the operator issues a manual OK. If the target heat transport system coolant temperature difference has decayed to shutdown levels and the prescribed cooling time has been met. If the target coolant flow rate reaches the shutdown requirement level.	Then the target heat transport system temperature difference is checked. Then the pump in the target heat transport system is shut down. Then the automated procedure asks for operator manual confirmation to proceed to Stage III.
III	SCA Coolant	If the operator issues a manual OK. If the SCA heat transport system temperature difference has decayed to shut down levels and the presented cooling time has been met. If the SCA coolant flow rate reaches the shutdown level.	Then the SCA heat transport system temperature difference is checked. Then the pump in the SCA heat transport system is shut down. Then the automated procedure asks for operator manual confirmation to proceed to Stage IV.
IV	Confinement Alignment	If the operator issues a manual OK. If the confinement building radiation levels are less than the allowed limit. If the confinement building air pressure is checked out.	Then the confinement building radiation levels are checked. Then the confinement building air pressure is checked. Then the automated procedure asks for operator manual confirmation to proceed to Stage V.

V	Secondary Coolant	If the operator issues a manual OK. If the inlet water temperature of the air dump cooling tower decays to the shutdown level and the prescribed cooling time has been met. If the secondary coolant flow rate reaches the shutdown level. If air blower power of the cooling tower has reached shutdown level. If the operator is satisfied that all Mode III actions have been carried out. In this stage both, the target/SCA and the accelerator secondary loops are closed	Then the inlet water temperature of the air dump cooling tower is checked. Then the pump in the secondary heat transport system is shut down. Then the cooling tower air blowers are shut down. Then the operator checks the Mode III actions. Then the operator issues a manual OK for Mode III status.
VI	Lockout	If the operator issues a manual OK for Mode III status.	Then the following GUI buttons are locked out to operator action – Accelerator START – Fuel Arm On

Figure 72 show the single-line diagram depiction of Table 16. The analogous table for shutting down to Mode III and taking the facility down from Mode II instead of Mode I is shown below as Table 16. The differences in the automated procedures are due to the differences in system operating requirements for the two modes as shown in Table 1

Table 17. Shut Down Mode III from Mode II

Stage	System	IF Condition	THEN Action
Upon operator selection of Shutting-Down Mode III button			
I	Accelerator/Neutron Power	If the accelerator conditions allow. If the neutron flux level signal is at shutdown levels. If the PPS has been switched to Mode III.	Then the accelerator is shut down in accordance with the procedures for accelerator operation. Then the operator switches the PPS to Mode III. Then the automated procedure asks for operator manual confirmation to proceed to Stage II.

II	Confinement Alignment	If the operator issues a manual OK. If the confinement building radiation levels are less than the allowed limit. If the confinement building air pressure is checked out.	Then the confinement building radiation levels are checked. Then the confinement building air pressure is checked Then the automated procedure asks for operator manual confirmation to proceed to Stage III.
III	Secondary Coolant	If the operator issues a manual OK. If the inlet water temperature of the air dump cooling tower decays to the shutdown level and the prescribed cooling time has been met. If the secondary coolant flow rate reaches the shutdown level. If air blower power of the cooling tower has reached shutdown level. If the operator is satisfied that all Mode III actions have been carried out.	Then the inlet water temperature of the air dump cooling tower is checked. Then the pump in the secondary heat transport system is shut down. Then the cooling tower air blowers are shut down. Then the operator checks the Mode III actions. Then the operator issues a manual OK for Mode III status.
IV	Lockout	If the operator issues a manual OK for Mode III status.	Then the following GUI buttons are locked out to operator action: – Accelerator START – Fuel Arm On

5.3 Procedure 3: Entering Mode IV

Mode IV for Loading/Unloading is entered from Mode III, which as discussed previously, is the interim short–term mode for the facility while it is being prepared to enter the other modes. Table 18 shows the sequence for this automated procedure. The preparatory actions have previously been taken by the operators. Figure 73 shows the single-line diagram depiction of Table 18.

Table 18. Loading/Unloading Mode IV

Stage	System	IF Condition	THEN Action
Upon operator selection of Loading/Unloading Mode IV button			
I	Confinement Alignment	If the SCA top shield or the airlock is not closed. If the confinement building air pressures meet the requirements for sub-atmospheric operation and the confinement building radiation level are lower than the allowed limits. If the PPS is switched to Mode IV.	Then the SCA top shield and the airlock are closed. Then the operator switches the PPS to the Mode IV. Then the automated procedure asks for the operator manual confirmation to proceed to Stage II.
II	Fuel Machine	If the operator issues a manual OK.	Then the Fuel Machine is given activation permission. Then the automated procedure issues Mode IV status.
III	Lockout	If a Mode IV status is issued.	Then the following GUI buttons are locked out to operator actions: - Accelerator START - Shield OPEN

5.4 Procedure 4: Exiting Mode IV

This procedure is the reverse of Sec. 5.3. Taking the facility from Mode IV back to Mode III requires the sequence shown in Table 19. As in the case of Procedure 3, before the sequence in Table 19 is initiated, all preparatory actions should have been carried out by the operators. Figure 74 shows the single-line diagram depiction of Table 19.

Table 19. Shut-down Mode III from Mode IV

Stage	System	IF Condition	THEN Action
Upon operator selection of Shutting-Down Mode III button			
I	Confinement Alignment	If the fuel machine is back to its parking position. If confinement building air radiation levels are less than the allowed limits. If the PPS has been switched to Mode III.	Then the confinement building air pressure and radiation levels are checked. The operator switches the PPS to Mode III. Then the operator issues a manual OK for Mode III status.
II	Lockout	If the Mode III status is issued.	Then the following GUI systems are locked out to operator actions: - Accelerator START - Fuel machine ON

5.5 Procedure 5: Entering Mode V

Mode V for Plant Maintenance/Target Replacement is entered from Mode III. Mode III is the interim shutdown mode for the facility for the short term. Table 20 shows the sequence for this automated procedure. The preparatory actions have previously taken by the operators before the initiation of this sequence. Figure 75 shows the single-line diagram depiction of Table 20.

Table 20. Plant Maintenance/Target Replacement Mode V

Stage	System	IF Condition	THEN Action
Upon operator selection Plant Maintenance/Target Replacement Mode V button			
I		If the sequence has been entered. If the PPS is switched to Mode V.	Then the operator switches the PPS to Mode V. Then the operator issues a manual OK for Mode V status.
II	Lockout	If a Mode V status is issued.	Then the following GUI buttons are locked out to operator actions: - Accelerator START

5.6 Procedure 6: Exiting Mode V

This procedure is the reverse of Sec. 5.5. Taking the facility from Mode V back to Mode III requires the sequence shown in Table 21. As in the case of Procedure 5, before the sequence in Table 21 is initiated, all preparatory actions should have been carried out by the operators. Figure 76 shows the single-line diagram for Table 21 for exiting Mode V.

Table 21. Shut-down Mode III from Mode V

Stage	System	IF Condition	Then Action
Upon operator selection of Shutting-Down Mode III button			
I	Confinement Alignment	If the SCA top shield or the airlock is not closed. If the SCA top shield position indicator signals closure and the airlock position indicator signal indicates closure. If the PPS has been switched to Mode III.	Then the SCA top shield and the air lock are closed. Then the operator switches the PPS to Mode III. Then the operator issues a manual OK for Mode III status.
II	Lockout	If a Mode III status is issued.	Then the following GUI buttons are locked out to operator actions: - Accelerator START - Fuel Arm ON

5.7 Procedure 7: Entering Mode VI

Mode VI for Plant Unattended is entered from Mode III. Mode III is the interim shutdown mode for the facility for the short term. Table 22 shows the sequence for this automated procedure. The preparatory actions have previously taken by the operators before the initiation of this sequence. Figure 77 shows the single-line diagram depiction of Table 22 for entering Mode VI.

5.8 Procedure 8: Exiting Mode VI

This procedure is the reverse of Sec. 5.7. Taking the facility from Mode VI back to Mode III requires the sequence shown in Table 23. As in the case of Procedure 7, before the sequence in Table 23 is initiated, all preparatory actions should have been carried out by the operators. Figure 78 shows the single-line diagram for Table 23 for exiting Mode VI.

Table 22. Plant Unattended Mode VI

Stage	System	IF Condition	THEN Action
Upon operator selection of Plant Unattended Mode VI button			
I	Fuel Arm	If the B_4C rods are positioned in the storage positions. If the B_4C rods are positioned in the core and the reactivity reaches shutdown margin. If the PPS is switched to Mode VI.	Then the Fuel Arm is given activation permission. Then operator switches the PPS to Mode VI. Then the operator issues a manual OK for Mode VI status.
	Lockout	If a Mode VI status is issued.	Then the following GUI buttons are locked out to operator actions: - Accelerator START - Fuel Arm on

Table 23. Shut-down Mode III from Mode VI

Stage	System	IF Condition	Then Action
Upon operator selection of Shutting-Down Mode III button			
I	Confinement Alignment	If the SCA top shield or the airlock is not closed. If the SCA top shield position indicator signals closure and the airlock position indicator signal indicates closure.	Then the SCA top shield and the air lock are closed. Then the operator issues a manual OK to proceed to Stage II.
II	Fuel Machine	If the operator issues a manual OK. If the B_4C rods are positioned in the storage locations and the reactivity reaches the required level.	Then the fuel machine is given activation permission. Then the operator switches the PPS to Mode III.
III	Lockout	If a Mode III status is issued.	Then the following GUI buttons are locked out to operator actions: - Accelerator START - Fuel Arm ON

During the startup in Mode I and shutdown from Mode i, the plant protection system has to disable the lower limits since the power is changing but it should not exceed the upper limit. Similar conditions apply to Mode II.

6 PLANT COMPUTER SYSTEM ARCHITECTURE CONCEPTUAL DESIGN

The logic diagrams and logic flow for the conceptual design of the PCS and PPS are described before. The implementation of these PCS/PPS logic diagrams and logic flow in the plant computer system architecture is summarized here. In the conceptual design, the PCS/PPS logic blocks and the operator GUI are integrated between the plant computer and a group of PLCs.

A diagram of the plant computer system interfaces is shown in Fig. 79. This figure draws together the top-level signal exchanges between the PPS and PCS PLCs and the plant systems and the operator. The overall flow of information begins with the operator interface, which sends a signal to initiate one of the eight automated plant procedures discussed in Sec. 5, or to manually initiate a facility trip. The arrow pointing to each automated sequence indicates the starting mode for that sequence. The selected mode is then transmitted to the plant computer system, which sends this information, along with current values for all monitored parameters, to the programmable local controller for each facility system. The PPS and PCS for each facility system are implemented on the system-specific PLC. The logic diagrams discussed in Sections 3 and 4 are loaded onto those logic circuits. The output signals of these logic circuits trigger the appropriate actuators, which in turn activate the necessary components to move the facility into the correct condition.

The rest of this section describes the Operator Interface (OI) which resides on the plant computer. This OI is composed of the operator GUI and the underlying logic implemented in software package algorithms that allows the operator to bring the plant into the Modes I-VI described in Section 5. It also implements the logic to allow the PCS and PPS on the PLCs to interface with each other and interact with the operator through the operator GUI on the plant computer.

6.1 Operator Interface Software

To implement the Operator Interface Software as explained in this report, it is necessary to have a Graphic User Interface, process-variable database, and sequence logic for their interactions. The process-variable database encompasses all PCS and PPS components – controls, sensor readings, operation modes, alarm and trip status, etc. Most process variables are directly generated from operator controls or sensor readings, but some may be derived as logical interactions of others. To implement the Operator Interface Software, several software tools, e.g., Experimental Physics and Industrial Control System (EPICS) and Control System Studio (CSS), are utilized. A particular advantage of using such approach includes distributed system implementation, which allows flexible implementation of components over multiple computers in the network. In this subsection, a brief overview description of each software tool is given.

6.1.1 EPICS Control System

EPICS is a comprehensive set of software tools and applications used to develop distributed control systems. Complete information on the software application and documentation is compiled in the online repository, ‘http://www.aps.anl.gov/epics/’. Primarily, this repository provides the tools for implementing a process-variable database and sequence logic in the

networked environment. Because it consists of many disparate software tools, provision of a detailed explanation of each is impractical. Instead, this section provides a brief summary of essential tools to allow an understanding of the basic concepts. For detailed descriptions, refer to the EPICS Application Developer's Guide, which can be found online at 'http://www.aps.anl.gov/epics/base/R3-14/12-docs/AppDevGuide/' for the most recent EPICS base release version, R3.14.12.3.

Typically, an EPICS control system is constructed from the following four building blocks. Figure 80 depicts a canonical form of the EPICS control system.

- Channel Access (CA) protocol
- Input Output Controller (IOC) software
- CA server application
- Client software

A typical implementation of a unit in an EPICS control system is the IOC, from which many different kinds of applications can be implemented. For instance, IOC can implement both CA client and/or CA server. An EPICS control system must consist of at least one CA Server.

IOC is a computer-running software called "IOC Core." The computer can be a VME-based real-time computer; a PC running Windows, Linux, or RTEMS; an Apple running OSX; and/or a UNIX workstation. These computers usually have input/output devices connected. The major software components of an IOC (IOC Core) are as described below and are also depicted in Fig. 81.

Channel Access allows other programs (CA Clients) to see and change values of Process Variables in an IOC (CA Server) over the network. This is the basic capability that enables construction of a distributed control system. Further technical details are given in the online Channel Access Reference Manual (http://www.aps.anl.gov/epics/base/R3-14/12-docs/CAref.html).

EPICS Database is a collection of one or more records of various types. Records are used as building blocks to create applications. This data file is loaded into IOC memory at boot time and is accessed via Channel Access. A record is an object with a unique name, type, properties (fields) that contain data, and the ability to perform actions on those data. Figure 82 shows examples of a few records. Refer to the online Record Reference Manual (https://wiki-ext.aps.anl.gov/epics/index.php/RRM_3-14) for detailed technical descriptions of the record database.

This record name can be concatenated by ':' (e.g., scs:flow), and field is concatenated by '.' (e.g., scs:flow.VAL). Each field can be accessed individually by name. A record name and field name combined make up the name of a Process Variable (PV), which is what Channel Access needs to access data.
A record performs action when it is processed. For example, when an output record is processed, it fetches the value which is output, converts the value, and then writes that value to the specified location. *Scanning* determines when a record is processed. Each record must specify the scanning method that determines when it will be processed. There are three scanning methods for database records: (1) periodic, (2) event, and (3) passive. A passive mode record is processed when a PP field (e.g., .VAL) is written, forward-linked from another record, or another record reads with Process Passive (PP) note. To facilitate a series of records

to process in interaction, the records use links, a type of field which contains an input link to fetch data, an output link to write data, and a forward link to invoke another record processing. The input and output links may be constant numeric value, hardware, or process variable (database or channel access) links. Link flags (PP, NPP, CA, CP, CPP) control invocation of the linked record. Figure 83 illustrates a few examples of multiple records being processing using links.

Sequencer runs programs written in State Notation Language (SNL). SNL is a 'C'-like language to facilitate programming of sequential operations. Common uses of the sequencer are automatic start-up/shutdown, fault recovery routines, and automatic calibration of equipment. For a detailed technical reference, see 'http://www-csr.bessy.de/control/SoftDist/sequencer/Installation.html'.
A sequencer program consists of State Sets that make a complete finite-state machine. Each state set is defined with states and transition conditions. Figure 84 illustrates a simple example of SNL code structure that follows a state transition diagram format.

Device Support provides hardware interface to the IOC's database. Device supports are available for most commercial hardware, e.g., ADC, DAC, Binary I/O, motor controllers, oscilloscopes, and PLCs.

6.1.2 Control System Studio (CSS-BOY)

Control System Studio (CSS) is a user interface framework (a collection of software tools) for control systems (e.g., EPICS, TANGO, TINE, etc.) based on Eclipse Rich Client Platform (RCP). It provides various features useful for developing a control system user interface such as synoptic/archive/trend/alarm displays.

For development of the operator panels, we used BOY (Best OPI Yet), an operator interface (OPI) editor and runtime. An OPI is a graphical user interface that displays live control system data to the operator and allows them to input data to the control system. With BOY, one can develop powerful OPIs by configuring graphic control panels, connect PVs, dynamic rules and scripts, and test operation. The OPI Editor in BOY is a WYSIWYG (What You See Is What You Get) editor. The OPI Runtime can display the OPIs in either tabs or windows. It also provides the navigation function as in a web browser, by which one can easily navigate from the opened OPIs history. BOY is integrated in CSS, thus sharing its various features. BOY was developed based on Java and Eclipse with the pluggable feature, which means it can be installed in any Eclipse RCP application by simply copying the BOY plugins file into the RCP application's plugins folder. BOYS has been tested on Windows, Unix, and X OS platforms.

6.1.3 PyEpics

In the development phase, the control system was tested against a plant simulator program in FORTRAN. To provide the interface with the EPICS control system, a separate bridge program was written in Python. In this regard, the Epics Channel Access capability provided by the PyEpics module.

PyEpics is an interface for the Channel Access (CA) library of the EPICS control system to the Python Programming language. The PyEpics package provides a base 'epics' module to Python, with methods for reading from and writing to EPICS Process Variables via CA protocol. The package includes low-level Channel Access functions such as epics.caget(), epics.caput(),

epics.cainfo(), and epics.camonitor(). There is also a pv.PV object that represents an EPICS Process Variable as a Python object.

6.2 Operator Interface Implementation with EPICS/CSS-BOY

The operator interface for the KIPT/ADS is configured as a distributed control system based on EPICS/CSS framework. The operator interface application operates as multiple concurrent application threads. The multiple threads can be distributed on multiple computers, taking into consideration shared computational load and displays. Figure 85 illustrates the implemented control system that consists of multiple computers running the following applications threads:

- Main system IOC
- Field IOCs
- GUI applications
- Fuel-handling machine operation
- (Plant simulator)

During control system development and testing, modified control system architecture was implemented in which the field IOCs are replaced with a plant simulator/system model as depicted in Fig. 86.
The details of each component application are described in the subsequent sections.

6.3 GUI Applications

Graphical user interface (GUI) applications provide the operator with a graphical interface to plant operation and display plant status. Multiple OPIs are implemented using CSS-BOY. These OPIs can be ported to any computers in the network and will access the process variables from the IOC server via Channel Access. Figure 87 shows the overall graphical layouts of the operator interface panels.

6.3.1 Plant Status Panels

These consist of multiple OPIs displaying the current states of the plant. The OPIs include Plant Layout Panels, Plant Protection System Panels, and the Process Variable Plots Panel.

Plant Layout Panels include displays of the SCA cooling system, target-cooling system, and secondary cooling system, as shown in Figs. 88-90, respectively. Each displays the status of the plant components, including sensor readings, and status of valves and actuators on a graphic diagram of the subsystems. Sensor readings (pressure, temperature, flow) are displayed in analog text boxes. The states of the valves are shown by its colors: black for ‘CLOSED’ and green for ‘OPEN’. The states of the pumps are also indicated by the colors: black for ‘Off’ and green for ‘On’. The status of top shield and airlock are indicated by the colors: black for ‘CLOSED’ and green for ‘OPEN’. Pipes are indicated by colors: blue for water lines, and green for air lines.

Plant Protection System Panels consist of two OPIs, as shown in Fig. 91. They include displays of various sensors and the associated alarm/trip indicators, as well as the states of the accelerator and confinement shield. The OPIs contain multiple sensor display elements (flow, pressure, temperature, level, etc.) grouped into subsystems. Each display element consists of a sensor gauge and low and high alarm/trip indicator LEDs. The alarm/trip indicator LED blinks in yellow or red at different frequencies indicating the alarm/trip conditions. The background of each display element also blinks in colors (pink or orange) according to alarm/trip conditions. A

reset button is provided on each alarm/trip indicator, which allows the authorized operator to reset the trip condition. Reset action is password-protected to allow access only to the authorized operator. The reset buttons are enabled only when it is in trip condition. Otherwise, the button is grayed out. Figure 92 illustrates the above display logic.

The ***Process Variables Plots Panel,*** shown in Fig. 93, displays the time history of the analog sensor readings. This panel consists of three columns of plot display areas. Each column contains four plot displays for flow, pressure, temperature, and level sensor readings. Also displayed at the bottom of the third column are variables associated with accelerator power. Each plot display includes plots of multiple sensor readings of same type, for which legends may be turned on or off. If a legend is turned off, the plots are associated with the sequence of process variable listed in the title according to the colors red, green, blue, black, and purple.

6.3.2 Plant Control Panels

Plant control panels include the Operator Main Panel, Plant Control System Panel, and Automatic Sequence Panels.

The ***Operator Main Panel*****,** shown in Fig. 94, is a top-level user interface that provides access to various control panels. At the top, action buttons are lead to manual control of various plant sub-systems. In the middle row is a group of action buttons that invoke various semi-automatic sequences: start-up, shutdown, fueling/refueling, target maintenance/replacement, and plant unattended. These action buttons are enabled or disabled based on the current plant operation mode. Fig. 95 summarizes the interlock conditions. For instance, if mode=I, II, IV, V, or VI, then 'startup' button is disabled. At the bottom, a group of LEDs indicates the current plant operation mode.

The ***Plant Control System Panel*** (Fig. 96) allows the operator manual control of various plant components, such as pumps, valves, blowers, and shields. This panel can be invoked from the Operator Main Panel. The display consists of multiple control elements, which are grouped into subsystems and subsequent loops. Each control element consists of mutually exclusive on/off buttons. For certain safety critical components, the control buttons are disabled on the basis of plant operation mode and the current state of the component. Figure 97 summarizes the interlock logic; for instance, the target coolant pump 'off' button is disabled when the pump is turned on and the plant is in normal operation mode (mode III).

Automatic Sequencer Panels guide the operator through certain routine operation sequences. These routines include start-up, shutdown, fueling/refueling, target replacement/maintenance, and plant unattended, as shown in Fig. 98. Arranged top-to-bottom in each sequencer panel is multiple text boxes indicating the sensor readings or component status relevant to individual check steps. The checked steps are grouped into subsystems and invoked with a user confirmation button. For safety, some mode entry and exit buttons are disabled on the basis of plant operation mode, as summarized in Fig. 99. The textbox of the current step is indicated by a yellow background. The entire process will lead from one operation mode to another. At the end of the sequence, an LED display indicating the destination mode will be lit. Execution of the sequencer panels is governed by the sequencer program, which is a part of the main system IOC. Detailed descriptions of the sequencer programs are given in subsection 6.4.2.

6.4 Main System IOC

The main system IOC is a soft-IOC application, which launches and maintains the control system record database and the automatic operation sequences.

6.4.1 Main system record database

The main system records are entailed in several database files: general.db, valve.db, sca.db, tcs.db.

A record is classified by *System*:*Component*. *System* designates which subsystem the component belongs to, and can take on ‘aso’ (operator interface), ‘omp ’(operation mode), ‘seq’ (sequencer), ‘sca’ (subcritical assembly), ‘tcs’ (target cooling system), ‘scs’ (secondary cooling system), ‘con’ (confinement), ‘ans’ (neutron system), ‘pool’ (fuel storage pool), and ‘wst’ (waste tank).

Representative IOC components are operation mode, valves (designated as v#), pumps (p#), and various sensors. In addition, there are component records for blowers (blwr), top shield (ts), and airlock (airlk). A component may be associated with Process Variables of various types: analog input (AI), analog output (AO), binary input (BI), binary output (BO), Multi-bit binary input (MBBI) or Multi-bit binary output (MBBO). Table 24 summarizes the implemented IOC components, which are also explained below.

- *Modes* indicate the operation mode and plant protection modes of the plant. They are MBBO components taking on values for Mode I (normal operation), Mode II (testing/calibration), Mode III (shutdown), Mode IV (fueling/refueling), Mode V (target maintenance/replacement), and Mode VI (plant unattended).
- *Valves* are implemented with three subcomponents: control (v#C), status (v#closed, v#open), and disable mode. Control is a BO component commanding to turn on or off the valve. Status is composed of two BI components accepting the indicated ON and OFF status of the valve. Disable mode is a BO component indicating if the valve is allowed to be turned off. Its value is determined by the status of system operating mode and control, as illustrated in Fig. 100. This signal is sent across the hardware (or simulator) interface along with the control command to prevent some safety critical components from being turned off in certain conditions (e.g., during normal operation).
- *Pumps* are implemented as two subcomponents: control (v#C), and disable mode. Control is a BO component commanding to turn on or off the pump. Disable mode is a BO component indicating if the pump is allowed to be turned off. It is determined in the same manner as for valve as indicated in Fig. 99.
- *Sensors* are implemented as five subcomponents: one sensor reading, and four alarm/trip signals. Sensor reading is an AI component accepting an output value from an AO. A number of alarm/trip signals (alarm low, alarm high, trip low, and trip high) are associated with a sensor reading. These are BI components accepting the alarm/trip status of the associated sensor reading. IOCs are implemented for various sensors, including pressure sensor (ps#), differential pressure sensor (dps#), temperature sensor (ts#), differential temperature (dts#), level sensor (ls#), leak detector (LD#), radiation sensor (rd#), and seismic sensor (seismic). Certain components have multiple inlets/outlets. For example, for heat exchangers, the differential temperatures are defined for high temperature side (htx:hi) and low temperature side (htx:lo).
- *Blower* is a BO component for turning on or off the air blowers for the secondary cooling loop and confinement.
- *Top shield* and *Airlock* systems are implemented with control and status. Control consists of two BO components: open and close. The open/closed status is monitored by two status components: open and closed.

Table 24. IOC components of main system record database

Component	Sub-component	Description	Values
mode	operation mode	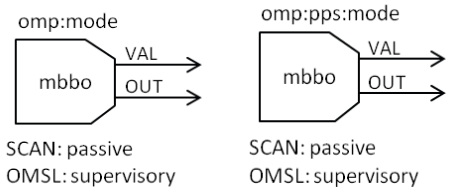	0=None 1=Mode1 2=Mode2 3=Mode3 4=Mode4 5=Mode5
	plant protection mode		
valve	control	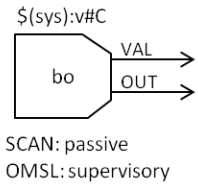	0=Close 1=Open
	status	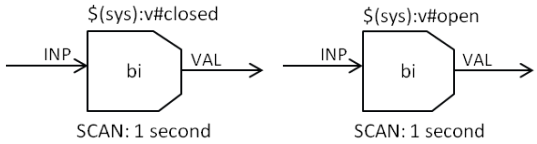	0=Not CLOSED 1=CLOSED 0=Not OPEN 1=OPEN
	(disable) mode	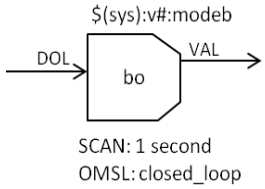	0=Not DISABLED 1=DISABLED
pump	control	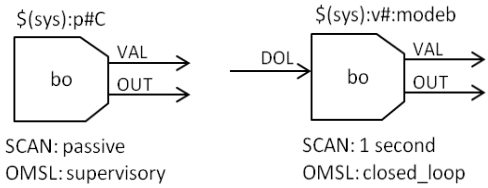	0=Off, 1=On
	(disable) mode		0=Not DISABLED 1=DISABLED
sensors	reading	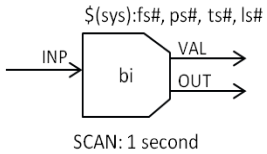	Analog
	alarm	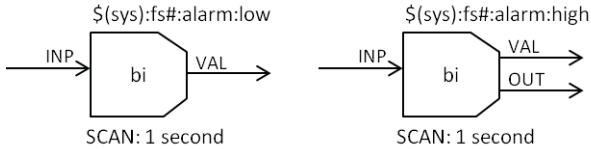	0=OFF, 1=ON
	trip	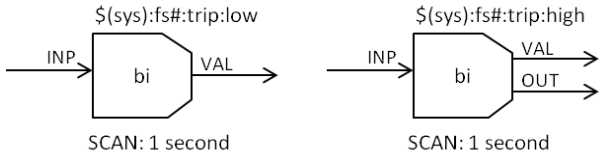	0=OFF, 1=ON

blower	control	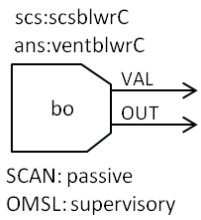	0=Off 1=On
Top Shield, Airlock	control-open	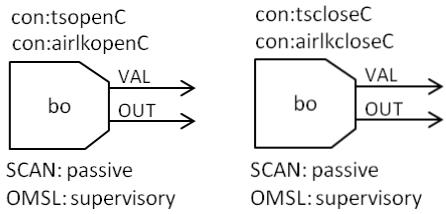	0=Not Open 1=Open
	control-close		0=Not Close 1=Close
	status-open	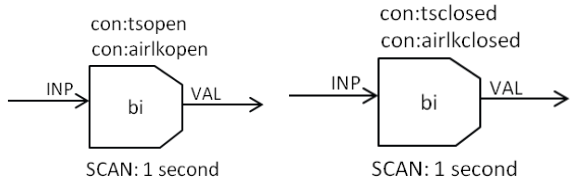	0=Not OPEN 1=OPEN
	status-closed		0=Not CLOSED 1=CLOSED

6.4.2 Sequencer

Several plant operation procedures utilize the IOC's sequencer capability. A sequence program is implemented as a collection of state automata using SNL (State Notation Language), a 'C'-like programming language. The following sequencers are implemented: start-up sequence, shutdown sequence, loading/unloading sequence, target replacement/maintenance sequence, and plant unattended sequence. Figures 100-104 illustrate the state transition diagrams depicting these sequencers. Upon invocation of main system IOC, all sequencer threads are invoked concurrently, wherein the state transitions are triggered or pended by 'semaphors' reflecting system states. Each sequencer is run in conjunction with an operator interface panel, as shown in Fig. 98.

The Start-up Sequence is implemented with a sequencer and an OPI (illustrated in Figs. 101 and 98(a), respectively. The start-up sequencer is a set of finite-state machine (FSMs) and is triggered by user input, i.e., pushing the start-up button from the main operator panel. That sequence brings the plant operation mode from mode III (shutdown) to either mode I (normal operation) or mode II (testing/calibration). Buttons are provided in the OPI to allow selection of the destination mode. The start-up sequencer is implemented with the following FSM: scsstart, constart, scastart, tcsstart, and ansstart. Each FSM leads through individual start-up actions for the subsystem: secondary coolant system, confinement, SCA coolant system, target coolant system, and accelerator system. The OPI provides the interface for operator actions and indication of the state progression. These FSMs are invoked sequentially by completion semaphores, which is set by user confirmation at the end of each stage FSM.

The Shutdown Sequence brings the plant operation mode from mode I (normal operation) or mode II (testing/ calibration) to mode III (shutdown). This sequence is implemented with an FSM set (sequencer) and an OPI, as illustrated in Figs. 102 and Fig. 98(b), respectively. The shutdown sequencer is triggered by user input, i.e., pushing the shutdown button from the main operator panel. Use buttons in the OPI indicate selection of the originating mode. The

shutdown sequencer is implemented with the following FSM: ansstop, tcsstop, scastop, constop, and scsstop. Each FSM leads through shutdown actions for the relevant subsystem: secondary coolant system, confinement, SCA coolant system, target coolant system, and accelerator system. The OPI provides the interface for operator actions and indication of the state progression. These FSM are invoked sequentially by user confirmation and system states.

The Loading/Unloading Sequence brings the plant operation mode from mode III (shutdown) to mode IV (fueling/refueling) and back to mode III. This sequence is implemented with two FSM sets and an OPI as illustrated in Figs. 103 and Fig. 98(c), respectively. The loading/unloading OPI is invoked from the main operator panel when the user pushes the loading/unloading button. Sequencers are available for entering and exiting mode IV, which are triggered by user buttons in the OPI. The loading/unloading sequencer consists of the following FSMs: conSeqInFuel, fhmSeqInFuel, fhmSeqOutFuel, and conSeqOutFuel, which implement the relevant actions for the confinement system and fuel handling system upon entry and exit of the fueling stage. The OPI provides the interface for operator actions and indication of the state progression. The fuel arm selection button is linked with a graphic simulation of the fuel arm operation.

The Target Replacement/Maintenance Sequence brings the plant operation mode from mode III (shutdown) to mode V (target replacement/maintenance) and back to mode III. This sequence is implemented with two FSM sets and an OPI, as illustrated in Figs. 104 and Fig. 98(d), respectively. The target replacement/maintenance OPI is invoked from the main operator panel when the user pushes the target replacement/maintenance button. Sequencers are available for entering and exiting mode V, for which user buttons are provided in the OPI. The target replacement/maintenance sequencer consists of the following FSMs: ansSeqInTarget, conSeqOutTarget, and ansSeqOutTarget, which implement the relevant actions for the acceleration system and the confinement system upon entry and exit from the target replacement/ maintenance stage.

The Plant Unattended Sequence brings the plant operation mode from mode III (shutdown) to mode VI (plant unattended) and back to mode III. This sequence is implemented with two FSM sets and an OPI as illustrated in Figs. 105 and Fig. 98(e), respectively. The plant unattended OPI is invoked from the main operator panel by user pushing the plant unattended button. Sequencers are available for entering and exiting mode VI, for which user buttons are provided in the OPI. The plant unattended sequencer consists of the following FSMs: ansSeqInUnattend, conSeqOutUnattend, and ansSeqOutUnattend, which implement the relevant actions for the acceleration system and the confinement system upon entry and exit from the plant unattended stage.

6.5 Soft IOC as Field IOC Emulator

In deployment, the operator interface system will incorporate multiple field IOCs. The field IOCs operates the hardware components for the operation of the plant. In the development phase, however, to facilitate testing of the system, separate databases of soft IOCs were implemented to emulate the target hardware system IOC interface. Specifically these are output IOC components that feed through channel access to the input components (valve status, sensor readings, sensor alarm/trip status) of the main system. Fig. 106 illustrates representative soft IOC components in connection with main system IOC components. In later plant implementation, this soft IOC will be replaced with field IOCs. The records are named with a prefix representing the emulated target field system and matched with those of the main system IOC. For example, a simulator target system $(siml):System:Component represents a record

corresponding to System:Component, whereas the prefix $(siml) is a macro specifying the target field system, e.g., 'siml=kipt'. The PV types of the simulator database are complementary to the corresponding PVs in the main system database, e.g., $(siml):tcs:ps1 is AO (analog out) and tcs:ps1 is AI (analog in). Manual testing of the operator interface requires construction of an OPI that contains the control components involved with the sequence actions (Fig. 107).

6.6 Integration and Testing with Plant System Model

6.6.1 Bridge Program

The EPIC control system was tested with a plant system model program. For this purpose, a bridge program was developed to interfaces the EPICS control system with the plant system model (G-PASS/SCM). Figure 108 shows the overall structure of the integrated system; that system allows interactive operation of the plant system model for testing and demonstration purposes.

The bridge program is written in Python programming language. The bridge program utilizes PyEpics, a python module for EPIC Channel Access, to communicate with the EPICS server IOC. The bridge program contains two main classes: bridge database and handshake.

The Bridge Database Class contains definitions and methods to create and maintain a local database of process variables to be exchanged between the EPICS control system and the plant system model. In this regard, three associative arrays are implemented as follows:

epicsToSCM: contains control commands from EPICS control to plant system model
gpassToEpics: contains sensor readings from G-PASS to EPICS
scmToEPICS: contains component status (alarm/trip, ON/OFF) from SCM to EPICS

It also maintains an associative table that maps the different variable names of EPICS PV and G-PASS/SCM, as shown in the example in Fig. 109.

The bridge database also contains the following methods to initialize and maintain the PV associative arrays. This requires invocation of the plant system model and read/write from and to the EPICS control and the GPASS/SCM. In this regard, the following methods are implemented:

init_epics(): initializes EPICS control PVs with set initial values
start_GPASS_SCM(): launches the GPASS/SCM plant system model as a subprocess
get_GPASS_output(): reads GPASS output variables from gpass_output_file, updates gpassToEpics array, and writes the associated EPICS PV
get_SCM_output(): reads SCM output variables from SCM_output_file, updates scmToEpics array, and writes the associated EPICS PV
write_SCM_input(): get control commands from EPICS database, updates epicsToSCM array, and writes to scm_input_file.

The handshake class implements the communication with the GPASS/SCM plant system model. Communication is implemented as file I/O. The data are exchanged by first creating and writing to a file from one program that is subsequently read by the other program receiving the data. To prevent two programs from attempting access at the same time, a handshake protocol is implemented where a flag is set after writing to a file, which is checked before the other program attempts to read. Figure 110 illustrates the interactive handshake process.

6.6.2 Soft IOC for Interface with Plant System Model

Although the EPICS database and the plant GPASS/SCM plant system model shares similar process variable definitions, there are some discrepancies. Therefore, in order to interface with the plant system model for testing, a number of additions were made in the softIOC database to provide the resolutions. First of all, a linked database was implemented to translate the PPS mode variable in EPICS, which is multi-bit binary output (MBBO), to multiple individual binary output variables, as illustrated in Fig. 111.

In addition, because the GPASS/SCM plant system model is an approximate model, its control and process variables do not match exactly with those of EPICS. For instance, control of some pumps and valves in a loop control variables are combined as one command variable, e.g., the pumps and valves of the target cleaning loop (tcs:p1, tcs:v1 and tcs:v5) and SCA cleaning loop (sca:p21, sca:v51 and sca:v52) are combined as one variable tcs:clean and sca:clean, respectively. Also, the valves in the target cooling loop are combined as one variable. Fig. 112 illustrates the database chain to determine the (disable) modes for the combined variables. The combined variables are controlled directly by the respective pump control variables (tcs:p1 and sca:p1).

Also, the plant model provides separate commands for turning on and tripping the pumps and blowers. To resolve the discrepancy, the EPICS soft IOC database was modified with addition of some derived process variables. Each of these variables combines the multiple control commands and their (disable) modes. For each EPICS binary control variables (ON/OFF), separate process variables for ‘On’ and ‘Trip’ are derived. Specifically, these variables include those for accelerator power (sca:powerC), pumps (sca:p22C, tcs:p2C, scs:p100C) and blowers (scs:scsblwrC). Figure 113 illustrates the database logic. As illustrated, additional logic was implemented for ‘trip’ command. We have used the model’s ‘trip’ command, which is irrecoverable, for both normal turn-off as well as forced trip. Since the plant model cannot recover once it is tripped, this logic was necessary for simulating various action sequences, such as start-up, which requires activation from an initially ‘off’ condition.

6.6.3 Simulation Test Cases: Trip

As a first case test, a series of trip events are simulated. For this test, the simulator is first run at full power and subsequently various facility upset conditions are initiated by tripping specific components off-line. In the sequence presented in this section, the facility upset initiators are:

Accelerator Power Trip is initiated by turning off the accelerator power from the manual control panel.

SCA Cooling Pump Trip is initiated by turning off the SCA coolant pump from the manual control panel.

Target Cooling Pump Trip is initiated by turning off the target coolant pump from the manual control panel.

Secondary Coolant Pump Trip is initiated by turning off the secondary coolant pump from the manual control panel.

Secondary Coolant System Air Blower Trip is initiated by turning off the secondary system cooling tower air dump blower from the manual control panel.

The objective of these tests is to verify that the PPS is responding correctly to protect the facility by proceeding through the off-normal condition series of automatic actions prescribed by the Operating Mode I PPS block diagram summarized in Figure 55. This should test the various trip set points and the scram of the facility. In each test case, figures (screen shots of the actual GUI displays) are presented below from the operator interface GUI showing the various sensor readings from the plant flow meters, pressure transducers, and thermocouples. The facility operators can point and click to see these displays to help them diagnose and respond to the transient with the off-normal conditions. Additional details regarding these displays can be found in the description of Fig. 93. To summarize, the process variable plots panel is arranged by the three major thermal-hydraulic systems; SCA Cooling System, Target Cooling System, and the Secondary Cooling System. Figs. 88-90 should be referred to for instrumentation location. The upper plot for each system is the flow meter readings. Below that are plots of the pressure transducer measurements. The third plot in the column is that of the temperature sensor values. The last plot for the SCA Cooling System is the water level in the core assembly tank, while the last plot for the Target Cooling System is that of the water level in the surge tank. It should be noted that for these test cases the levels have been artificially set low to speed up the computational plant model calculations. However, the last plot in the Secondary Cooling System is that of the power levels. The left-most scale is for SCA power (flux-based) and target power. The right-most plot shows the power of the pumps in each of the three systems. Note that the plant system model used in these calculations has system design values that have been deliberately changed from the actual design values to test the logic algorithms more efficiently. For example, the system transient time scales have been accelerated from those expected at the actual facility.

Accelerator Power Trip

The off-normal is initiated by turning off the accelerator power from the manual control panel. Figure 114 shows the early time response. The decrease in SCA power and target power is shown in the power display. The target cooling system temperatures respond by decreasing, as seen from the figures. While this is a short time window, it can be seen that the PPS has not tripped any of the pumps in response. That is to be expected because this will be a benign event with eventual cool-off of the entire system to the ambient temperatures. It will take time for the thermal inertia of the water inventory to respond.

SCA Coolant Pump Trip

This event is initiated by turning off the SCA coolant pump from the manual control panel. The first few seconds in the display of Figure 115 shows that the plant system model has reached full-power Mode I conditions. Then within the time window, the SCA coolant pump is manually turned off to start this test. As a consequence, the pressures and temperatures in the SCA cooling loop begin to change. Temperature changes are slower because of the thermal inertia of the SCA assembly tank water inventory. The power traces show that the PPS has reached a threshold and issued a scram signal that turned off the accelerator, which in turn is reflected in the quick reduction of the SCA and target powers to decay heat levels. The power plot also shows that the PPS, as part of the Fig. 55 block diagram algorithms, tripped off the remaining coolant pumps in each of the three cooling systems. This can be confirmed by reviewing the flow meter plots in each of the three systems in Fig. 115. System temperatures are beginning to cool as can be anticipated because the air dump blower in the secondary is still operating normally to remove stored heat and decay heat.

Target Coolant Pump Trip

This event is initiated by turning off the target coolant pump from the manual control panel. The first few seconds in the display of Fig. 116 shows that the plant system model has gone through the initialization process to reach full-power Mode I conditions. Then within time window, the target coolant pump is manually turned off to start this test. Pressures and temperatures in the target cooling loop as a consequence begin to change. The power traces show that the PPS has reached a threshold and issued a scram signal that turned off the accelerator, which in turn is reflected in the quick reduction of the SCA and target powers to decay heat levels. The power plot also shows that the PPS, as part of the Fig. 55 block diagram algorithms, tripped off the remaining coolant pumps in each of the three cooling systems. This can be confirmed by reviewing the flow meter plots in each of the three systems in Fig. 116. The system temperatures are beginning to cool, as can be anticipated because the air dump blower in the secondary is still operating normally to remove stored heat and decay heat. The SCA temperature changes are slower because of the thermal inertia of the SCA assembly tank water inventory.

Secondary Coolant Pump Trip

This event is initiated by turning off the secondary coolant pump from the manual control panel. The first few seconds in the display of Fig. 117 shows that the plant system model has gone through the initialization process to reach full-power Mode I conditions. Then within the time window, the secondary coolant pump is manually turned off to start this test. The pressures and temperatures in the secondary cooling loop as a consequence begin to change. The secondary temperature changes are slow because of the thermal inertia of the water basin inventory in the wet cooling tower. The power traces show that the PPS has hit a threshold and issued a scram signal that turned off the accelerator, which in turn is reflected in the quick reduction of the SCA and target powers to decay heat levels. The power plot also shows that the PPS, as part of the Fig. 55 block diagram algorithms, tripped off the remaining coolant pumps in each of the three cooling systems. This can be confirmed by reviewing the flow meter plots in each of the three systems in Fig. 117. The system temperatures are beginning to cool, as can be anticipated because the air dump blower in the secondary is still operating normally to remove stored heat and decay heat.

Secondary Coolant System Air Blower Trip

This event is initiated by turning off the secondary coolant system air blower from the manual control panel. First few seconds in the display of Fig. 118 shows that the plant system model is going through the initialization process to reach full-power Mode I conditions. Within 10 seconds, the SCA coolant system air blower is manually turned off to start this test. To see the system response, a second set of corresponding display figures is included to show the transient out to the first 50 seconds. Due to system thermal inertia, the temperatures in the cooling loops as a consequence start changing more slowly, so the PPS thresholds are reached longer into the transient. The power traces show that the PPS has hit a threshold and issued a scram signal that turned off the accelerator, which in turn is reflected in the quick reduction of the SCA and target powers to decay heat levels. The power plot also shows that the PPS as part of the Fig. 55 block diagram algorithms, tripped off the coolant pumps in each of the three cooling systems. This can be confirmed by reviewing the flow meter plots in each of the three systems in Fig. 118. System pressures also begin to change.

6.6.4 Simulation Test Cases: Sequence Routines

The operator interface was tested for interactive operation of various automated sequences (procedures). These are:

- ***Startup Sequence***
- ***Shutdown Sequence***
- ***Fueling/Refueling Sequence***
- ***Target Handling/Maintenance Sequence***
- ***Plant Unattended Sequence***

Where appropriate, the same plot display figures shown above in the test of the PPS trip events are also shown here. In all cases, the discussion is in reference to the specific procedure panel first shown and discussed in Fig. 99 (Automatic sequence panels).

Startup Sequence

Fig. 119 shows the OI GUI panel that the operator will invoke to initiate whichever facility procedure is required. The operator points and clicks the appropriate Start-up button to begin the selected procedure sequence from the Shutdown Mode III. Fig. 120 shows an abbreviated version of the Startup Sequence in order. Snapshots of the operator display GUI plot variables are shown in the same manner as in the PPS trip test events. The automated sequencer proceeds in planned steps from (a) to (c) of Fig. 120 in the start-up procedure. Not all the steps are shown. In (a), the air blower of the secondary heat dump is started. The air blower flow rate can been to start increasing in the Secondary Cooling System operator display plots. Then it can be seen in (b) that the secondary loop flow rate increases as the secondary cooling pump is turned on. System temperatures begin to decrease when this additional cooling capacity is initiated. After the planned numbers of automated steps in the sequence are successfully carried out, the step of turning on the accelerator power is reached. Details of these planned steps are available in Fig. 101. Fig. 120 (c) shows the sensor measurement display plots that the operators can see when the accelerator power is turned on. This results in increased SCA power and target power. The display shows that the total system now begins to heat up.

Shutdown Sequence

Fig. 121 shows the OI GUI panel that the operator will invoke to initiate the shutdown procedure when required. In this case, the operator points and clicks the appropriate Shutdown button to begin the selected procedure sequence from the Normal Operation Mode I. Fig. 122 is an abbreviated version of the Shutdown Sequence in order. Snapshots of the operator display GUI plot variables are shown in the same manner as in the PPS trip test events. The automated sequencer proceeds in planned steps from (a) to (c) of Fig. 122 in the shutdown procedure. Not all the steps are shown. In (a), the accelerator power that drives the target power and consequently the SCA power is turned off. The SCA power and the target power can be seen to start decreasing in the display (a) power plot as part of the Secondary Cooling System operator display plots. After the planned numbers of automated steps in the sequence are successfully carried out, the step of turning off the secondary cooling system air blower is reached. Details of these planned steps are available in Fig. 102. Fig. 122 (b) shows the sensor measurement display plots that the operators can view when the blower power is turned off. The result of the SCA power and target power reaching decay heat levels is, as can be seen from the display that the total system is cooling off. Because this is only a test case while the system is still cooling, as can be seen in (b), the secondary loop air blower flow rate decreases as the secondary air

dump blower is turned off. System temperatures continue to decrease because this blower cooling capacity is slow to decrease in this testing of the logic diagrams. Fig. 122 (c) shows the sensor measurement display plots that the operators can view when the shutdown is completed.

Fueling/Refueling Sequence

Fig. 123 shows the OI GUI panel used to initiate the fueling/refueling procedure when required. In this case, the operator points and clicks the appropriate fueling/refueling button to begin the selected procedure sequence from the Shutdown Mode III. Because the plant system model used to test the start-up and shutdown procedures (described above) is irrelevant to this test case, no display plots of flow, pressure, or temperature are shown here. Rather, Fig. 124 shows an abbreviated version of the Fueling/Refueling Sequence for entering Mode IV for fueling /refueling. Snapshots of the operator display panel are shown in steps going from left to right as the exit from Shutdown Mode III and entry into Fueling/Refueling Mode IV are finally completed. Fig. 125 is the test of the reverse case as the automated sequencer proceeds in planned steps from right to left. Exit is made from the Fueling/Refueling Mode IV and entry is made into the Shutdown Mode III. Because fuel handling is part of Mode IV, a snapshot of the fuel handling machine being manipulated by the Fuel Handling Simulator is shown in Fig. 126. The Fuel Handling Simulator is detailed in a separate report.

Target Handling/Maintenance Sequence

Fig. 127 shows the GUI panel that the operator will invoke to initiate the Target Replacement/Maintenance procedure when required. In this case, the operator points and clicks the appropriate Shutdown button to begin the selected procedure sequence from the Shutdown Mode III. Because the plant system model used to test the start-up and shutdown procedures (described above) is irrelevant to this test case, no display plots of flow, pressure, or temperature are shown here. Rather, Fig. 128 shows an abbreviated version of the Target Replacement/Maintenance Sequence panel in order to enter Mode V for target replacement/maintenance. Snapshots of the operator display panel are shown in steps going from left to right as the exit is made from Shutdown Mode III and entry into Target Replacement/Maintenance Mode V is finally completed. Fig. 128 also shows the test of the reverse case as the automated sequencer proceeds in planned steps going from right to left. Exit is made from the Target Replacement/Maintenance Mode V and entry is made into the Shutdown Mode III.

Plant Unattended Sequence

Fig. 129 shows the GUI panel that the operator will invoke to initiate the Plant Unattended procedure when required. In this case, the operator points and clicks the appropriate Plant unattended button to begin the selected procedure sequence from the Shutdown Mode III. Because the plant system model used to test the start-up and shutdown procedures (described above) is irrelevant to this test case, no display plots of flow, pressure, or temperature are shown here. Rather, Figure 130 shows an abbreviated version of the Plant Unattended Sequence panel in order to enter Mode VI for plant unattended. Snapshots of the operator display panel are shown in steps going from left to right as the exit is made from Shutdown Mode III and entry into Plant Unattended Mode VI is finally completed. Fig. 130 also shows the test of the reverse case as the automated sequencer proceeds in planned steps going from right to left. Exit is made from the Plant Unattended Mode VI and entry is made into the Shutdown Mode III.

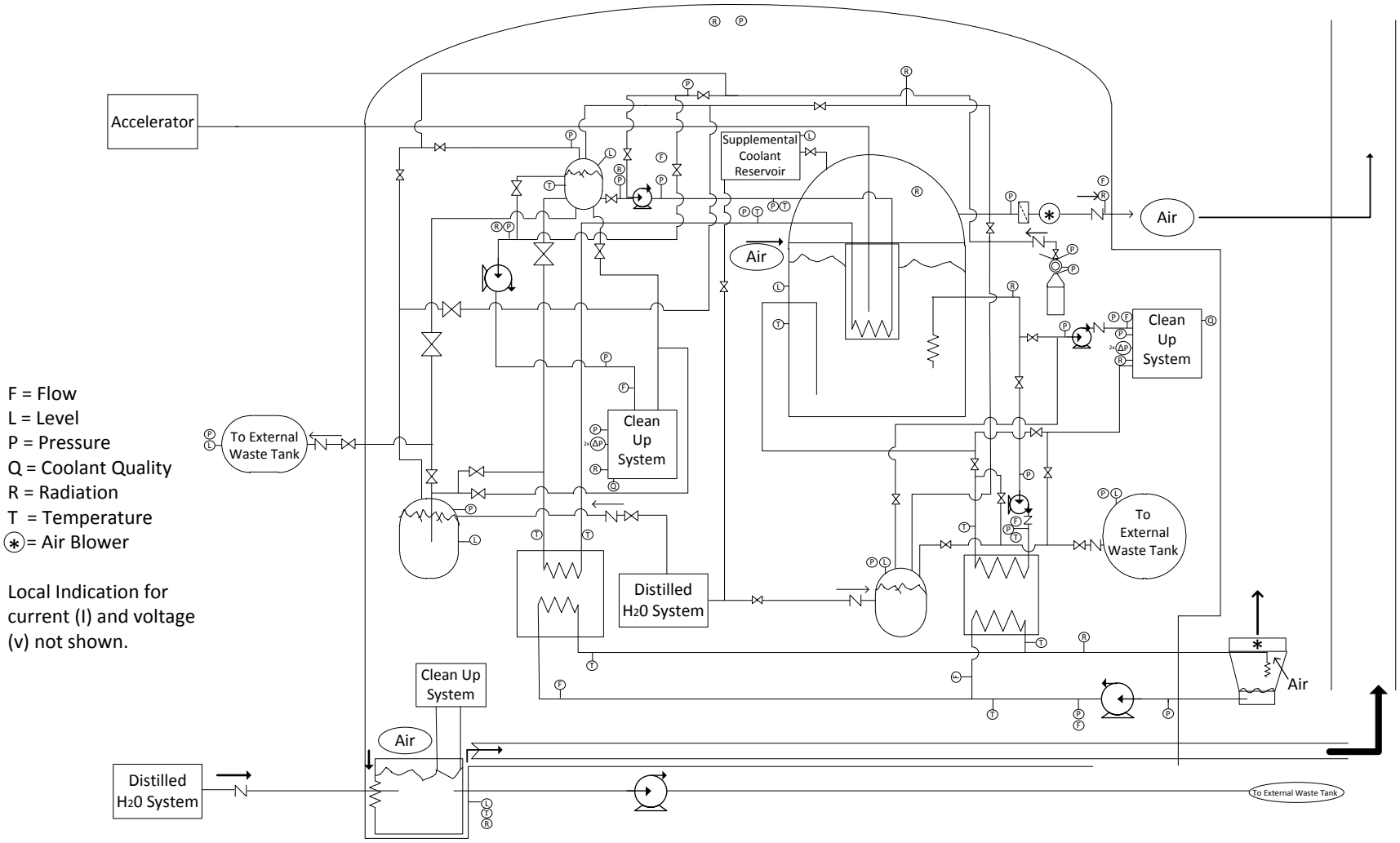

Figure 1. Instrumentation Layout

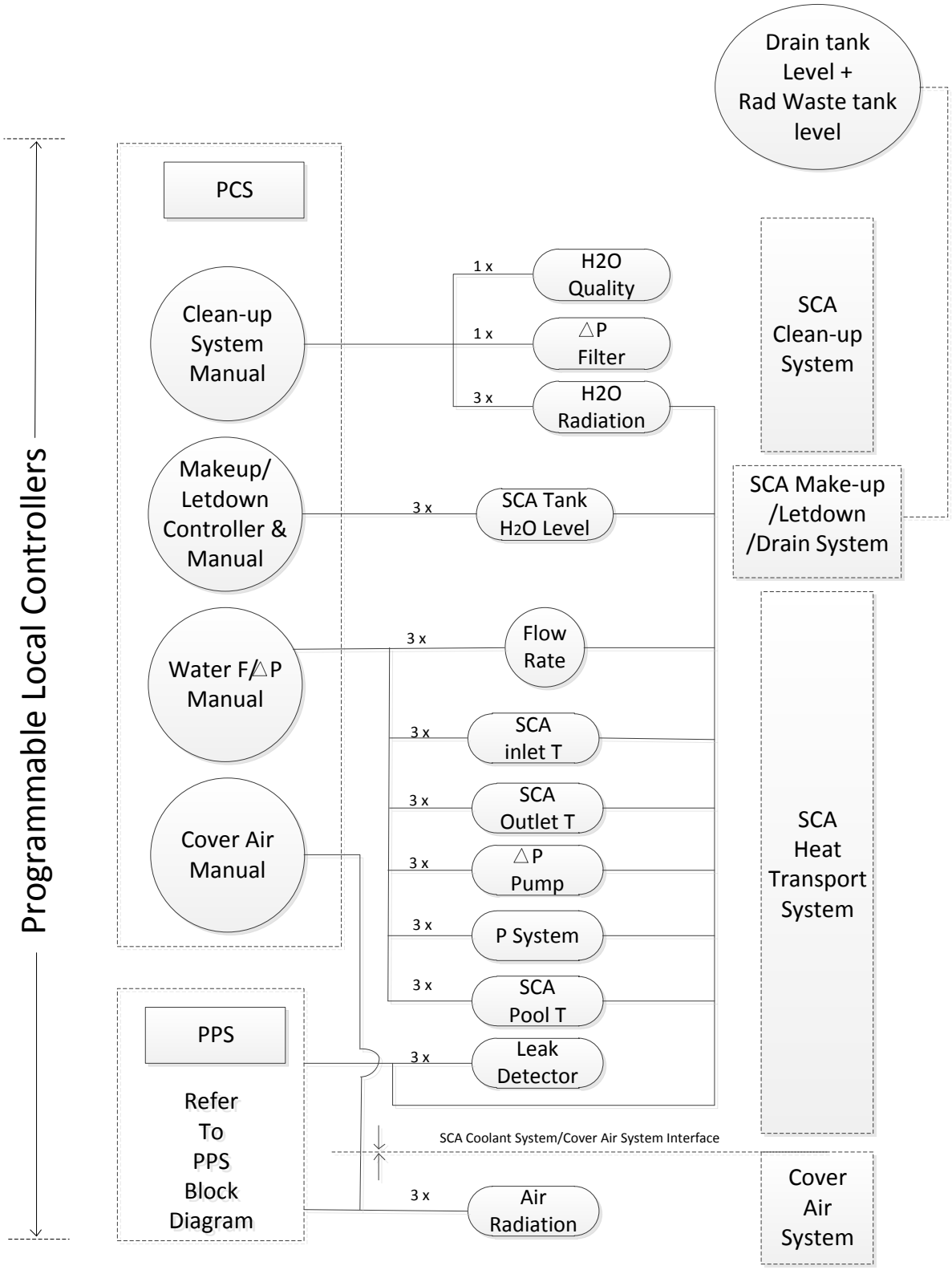

Figure 2. SCA Cooling System

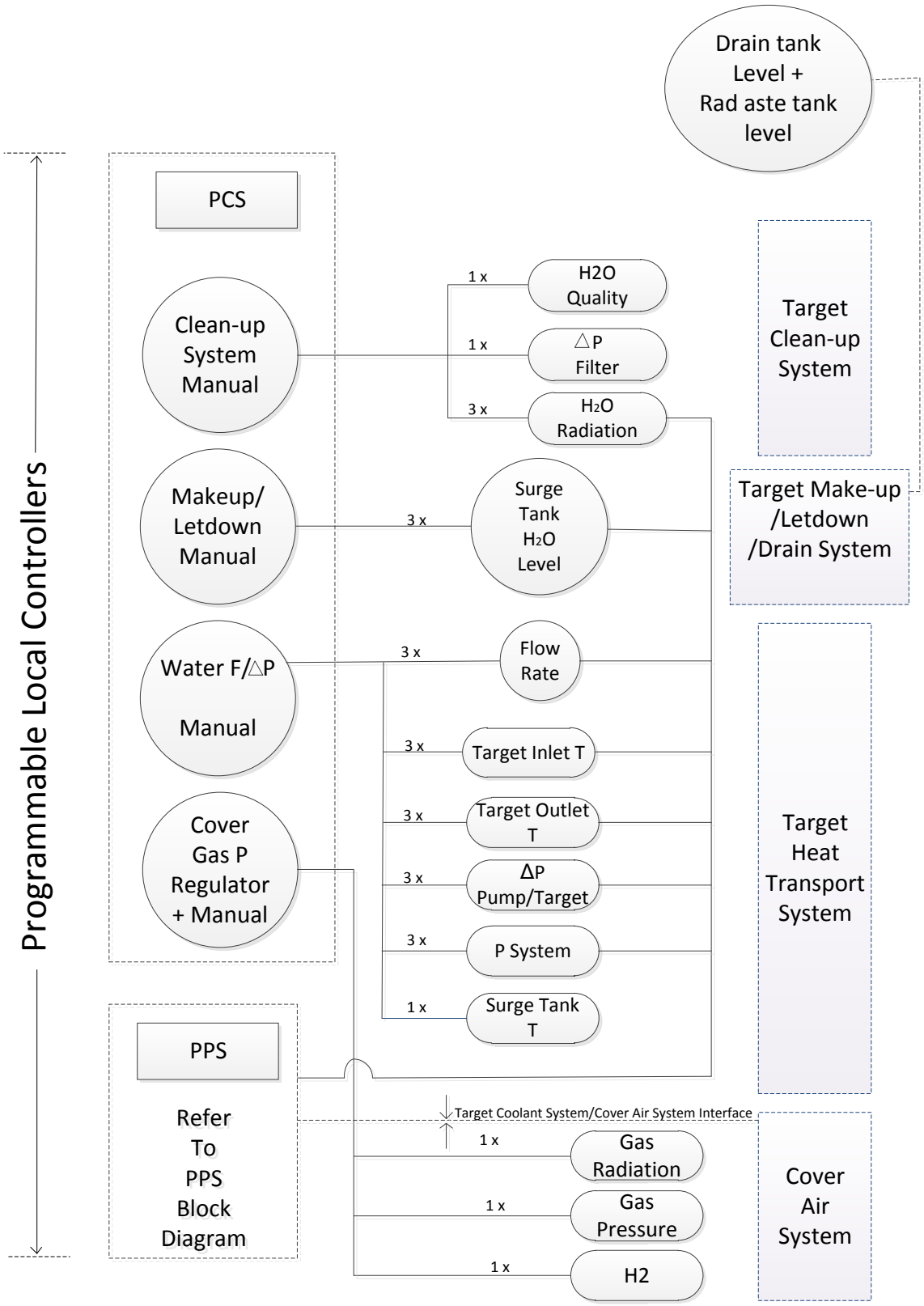

Figure 3. Target Cooling System PCS/PPS

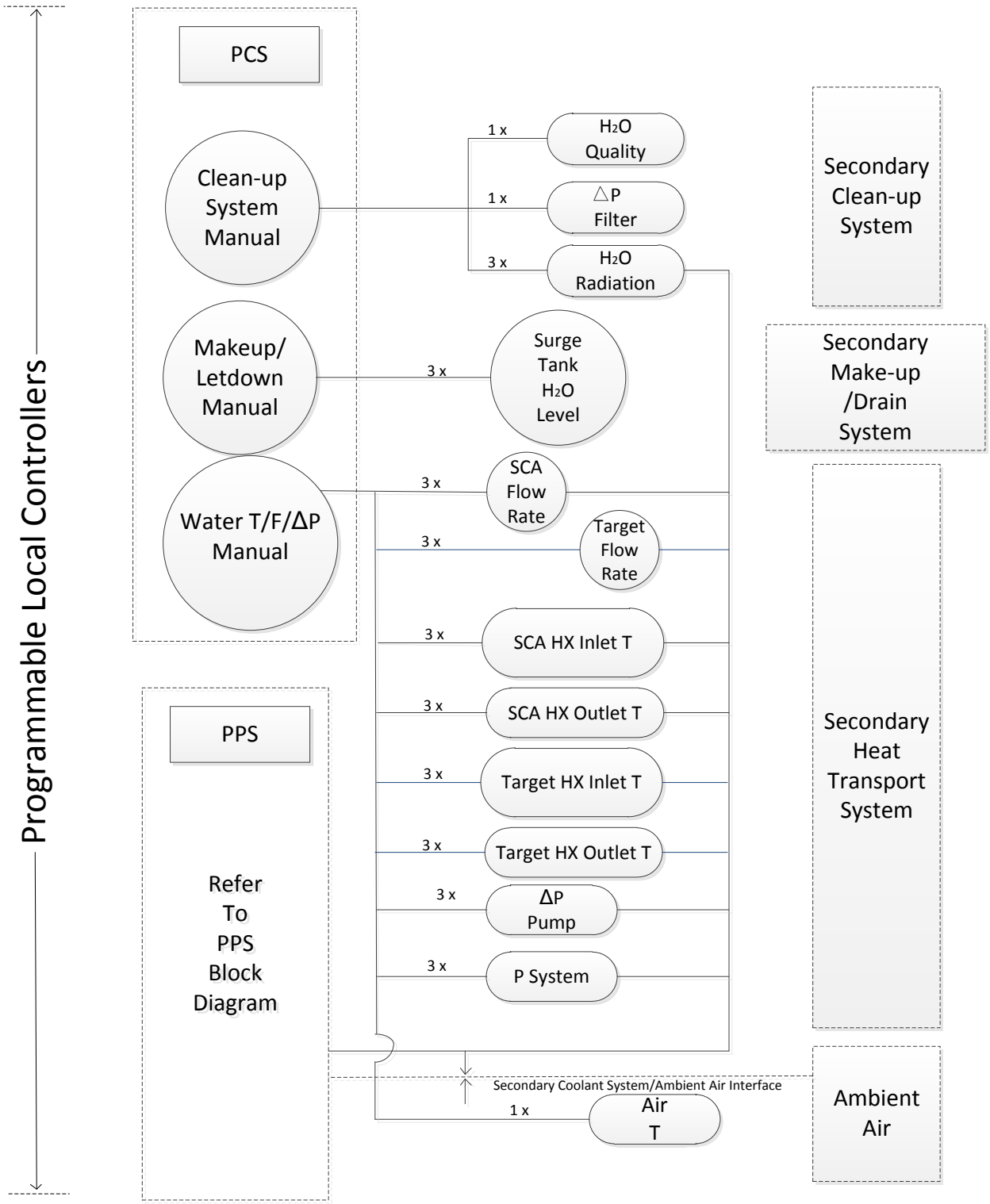

Figure 4. Secondary Cooling System PCS/PPS

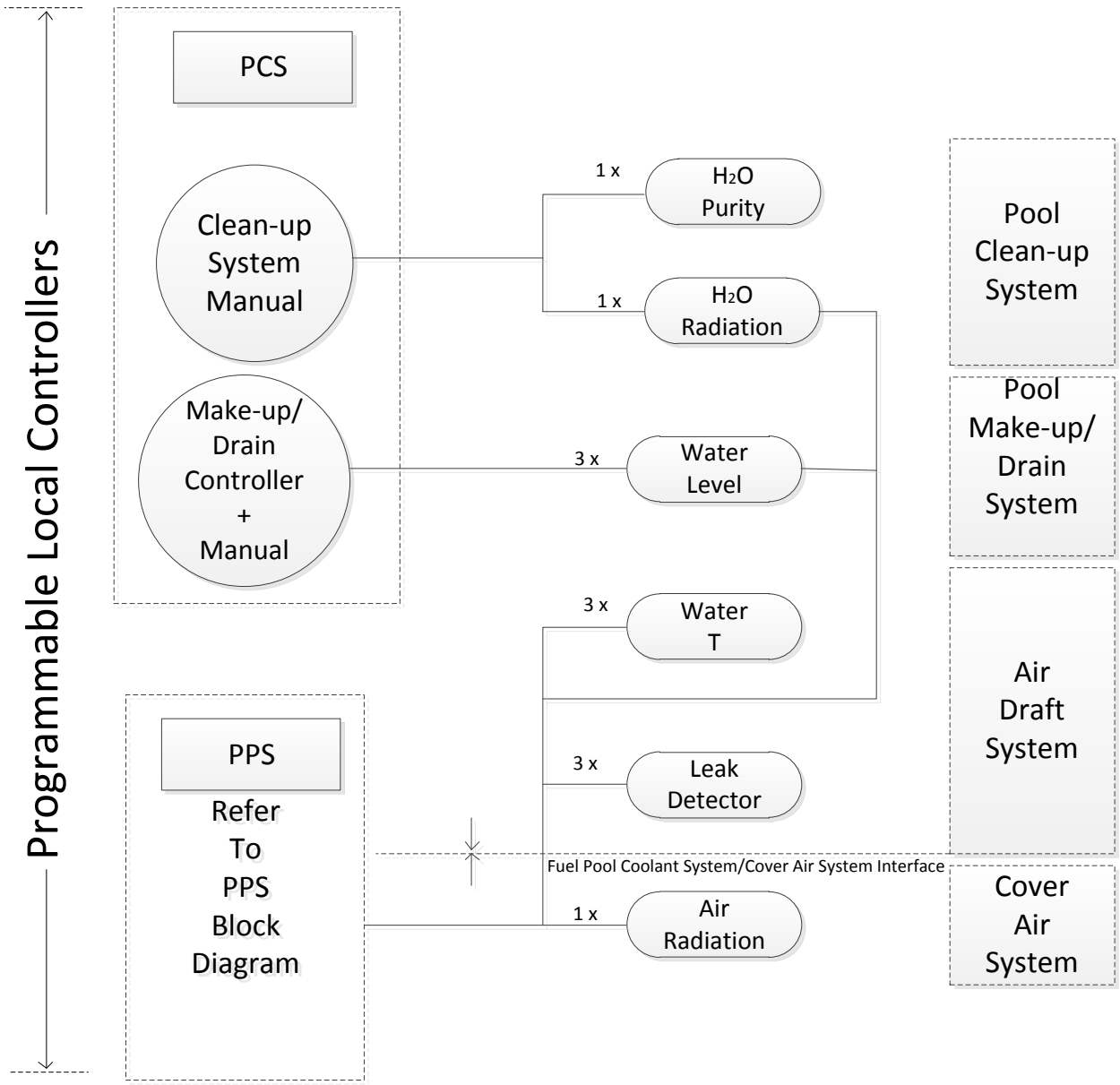

Figure 5. Fuel Pool Coolant System PCS/PPS

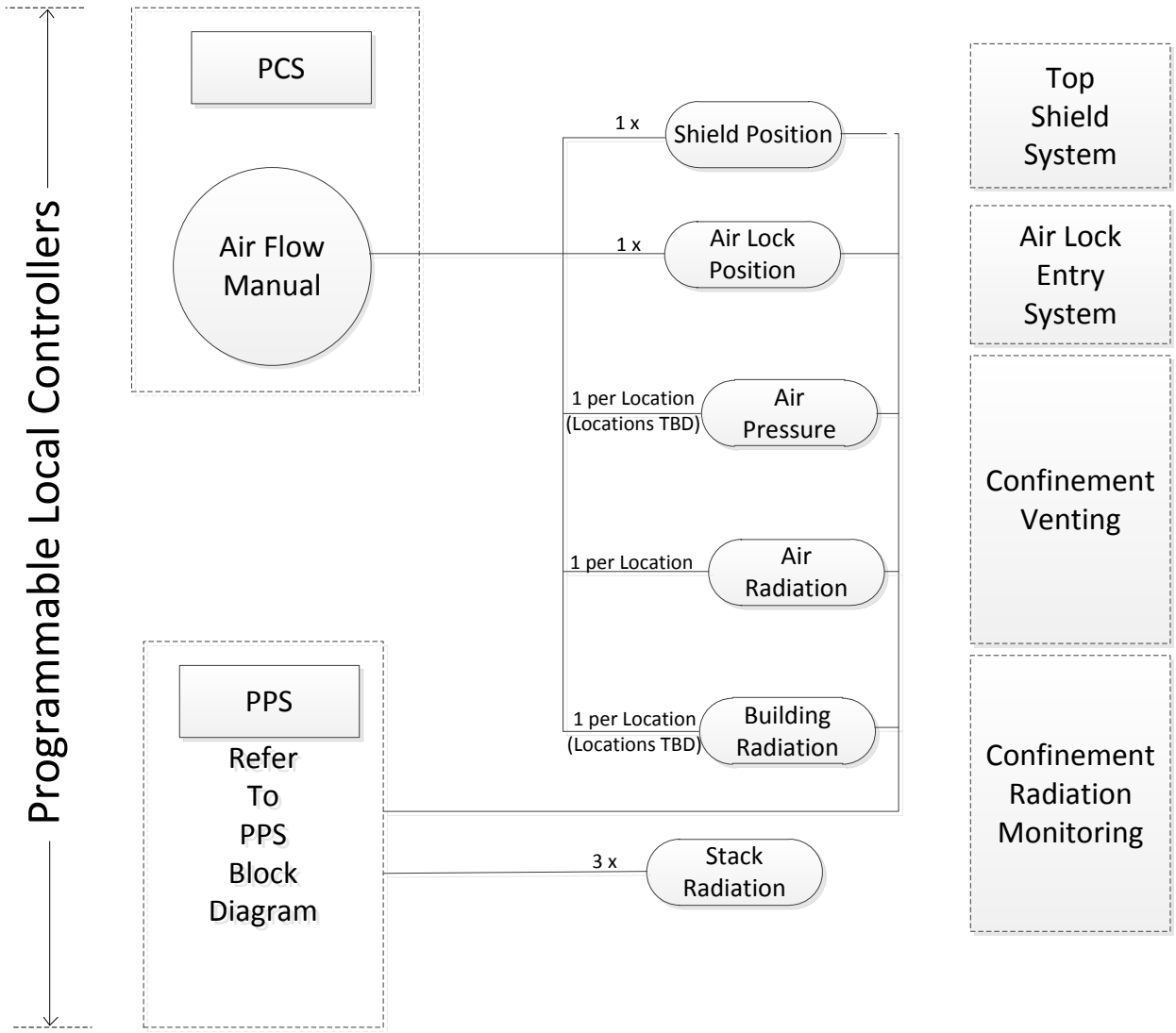

Figure 6. Confinement Alignment PCS/PPS

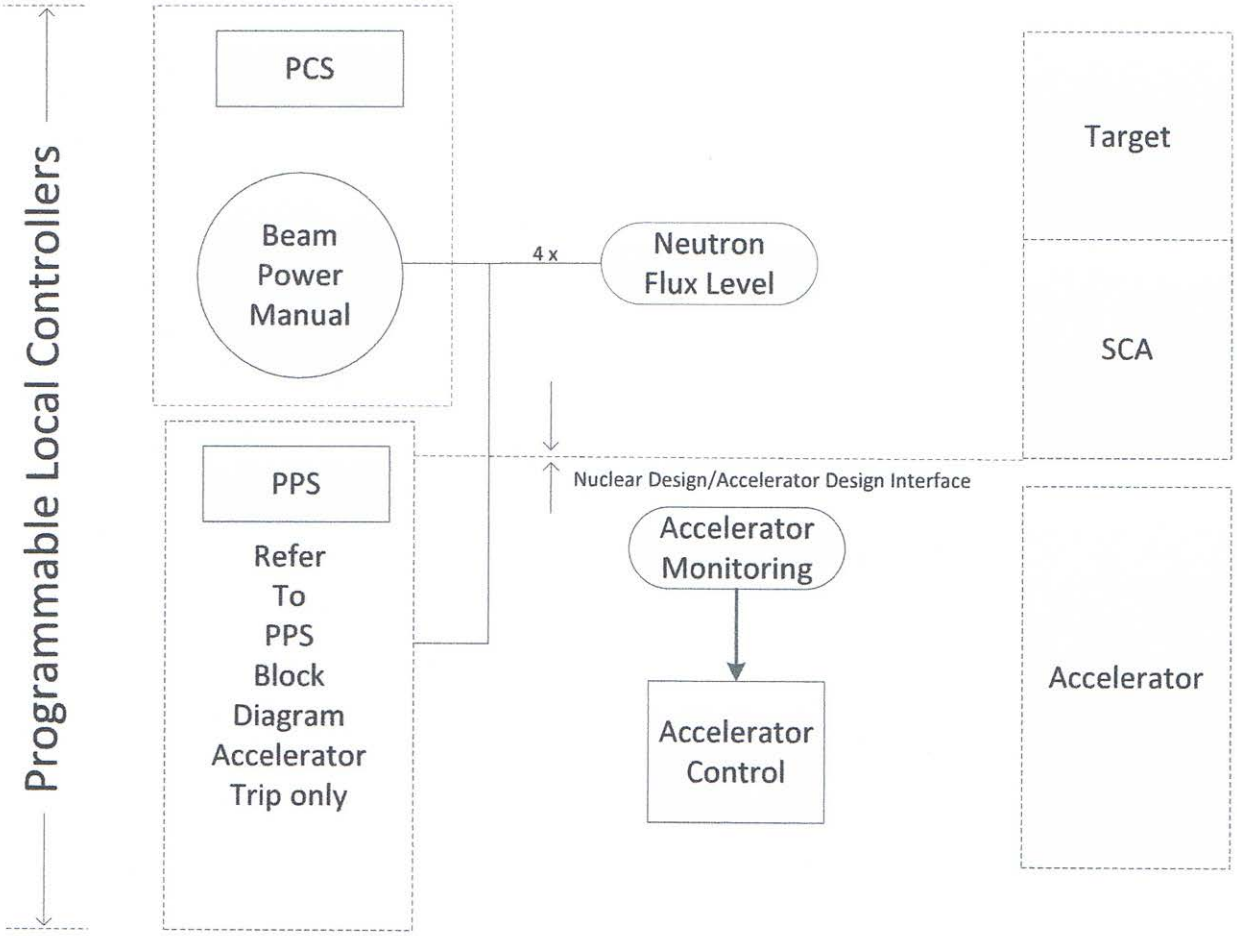

Figure 7. Neutron Flux Power System PCS/PPS

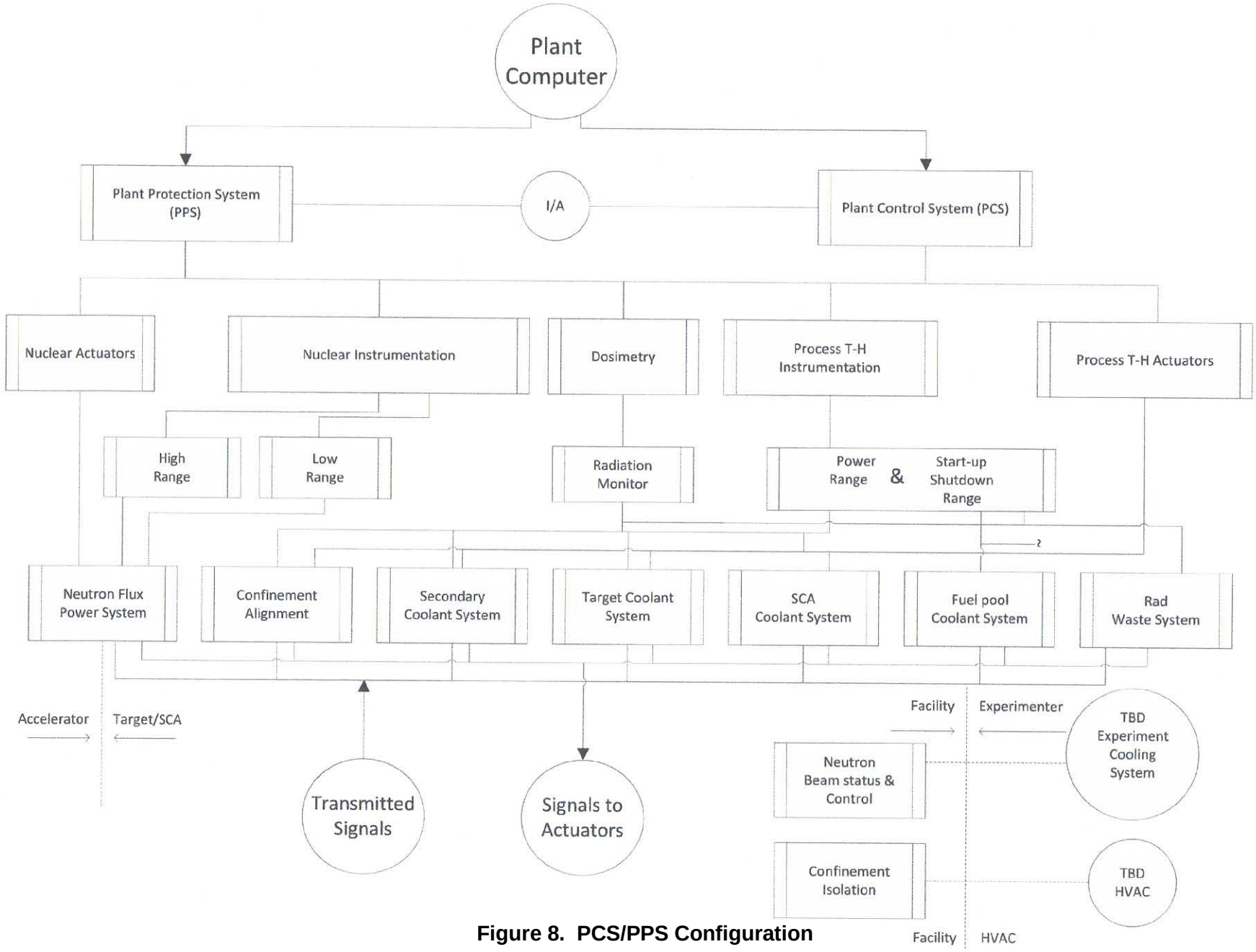

Figure 8. PCS/PPS Configuration

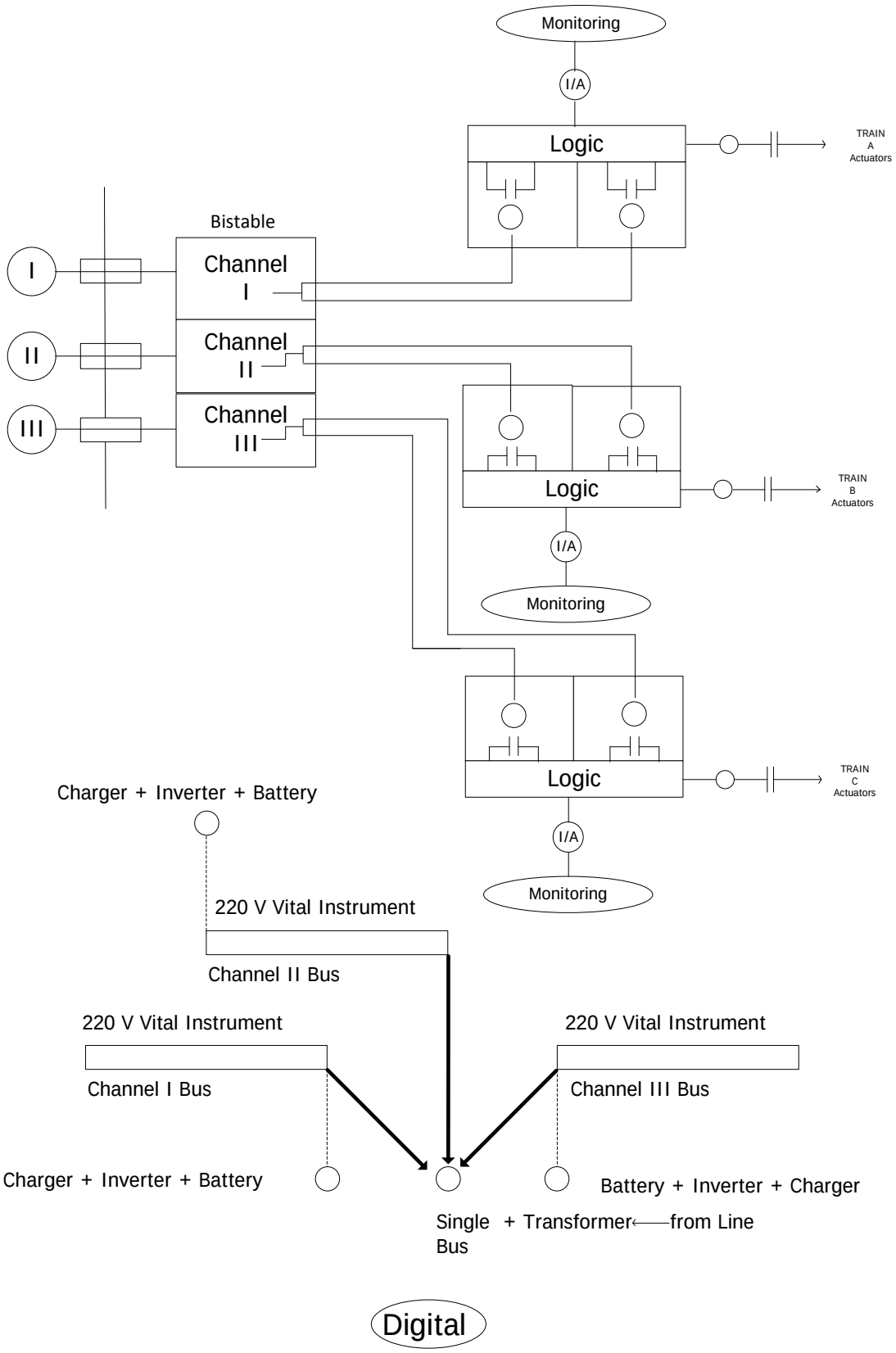

Figure 9. Channel System Architecture

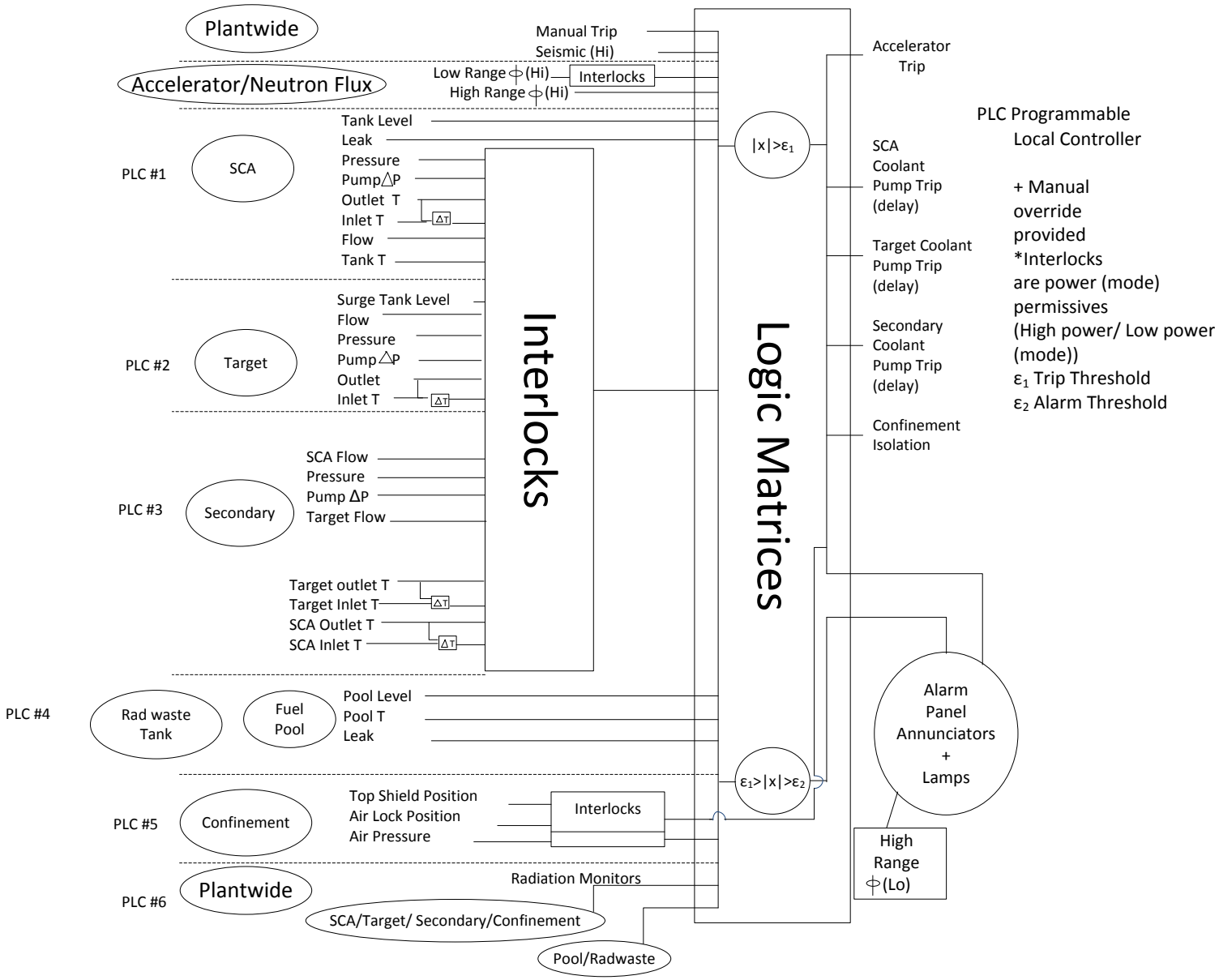

Figure 10. Generic PPS Block Diagram

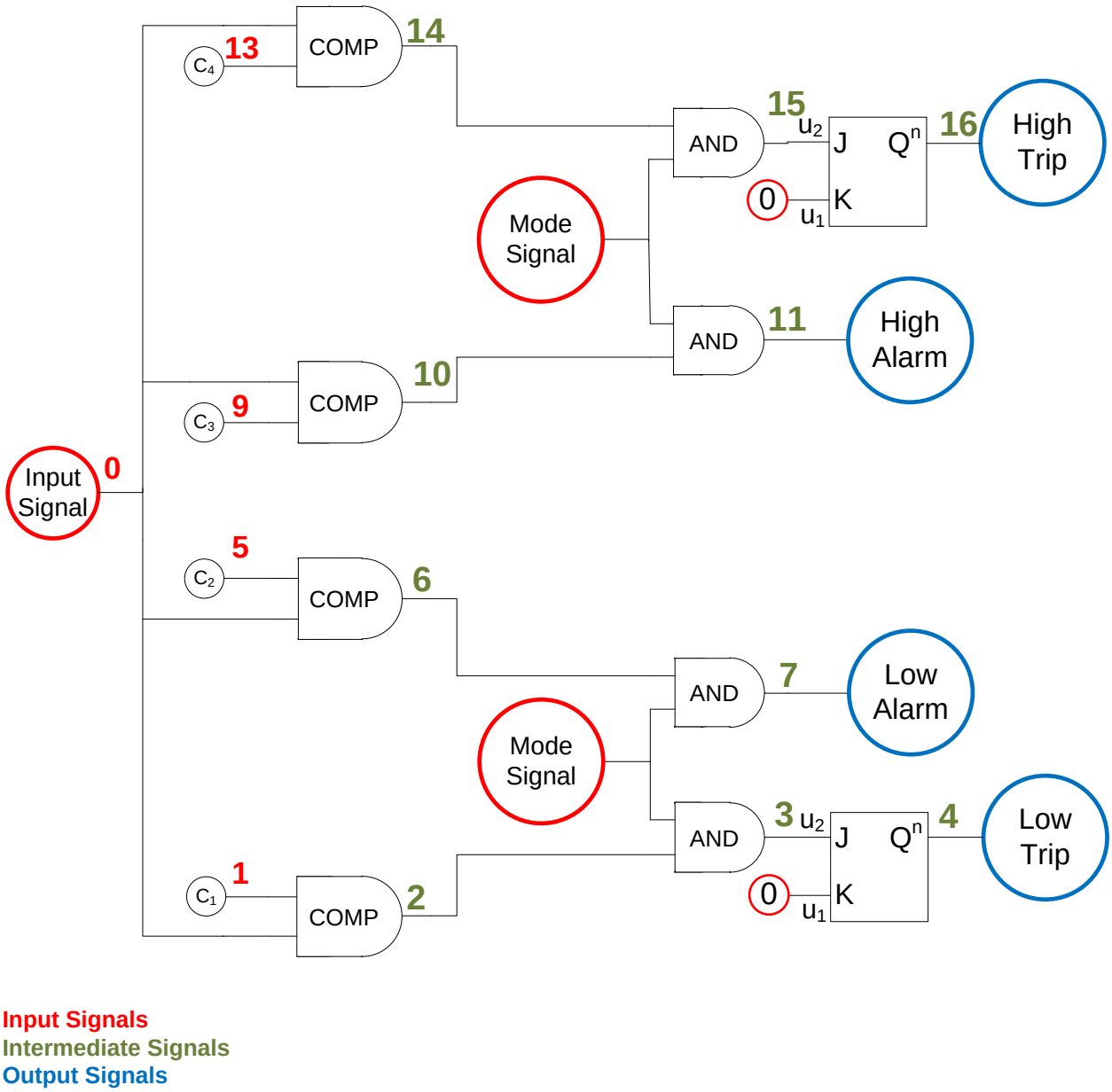

Input Signals
Intermediate Signals
Output Signals

Figure 11. Logic Block Signal Numbering Template for Logic Testing Model

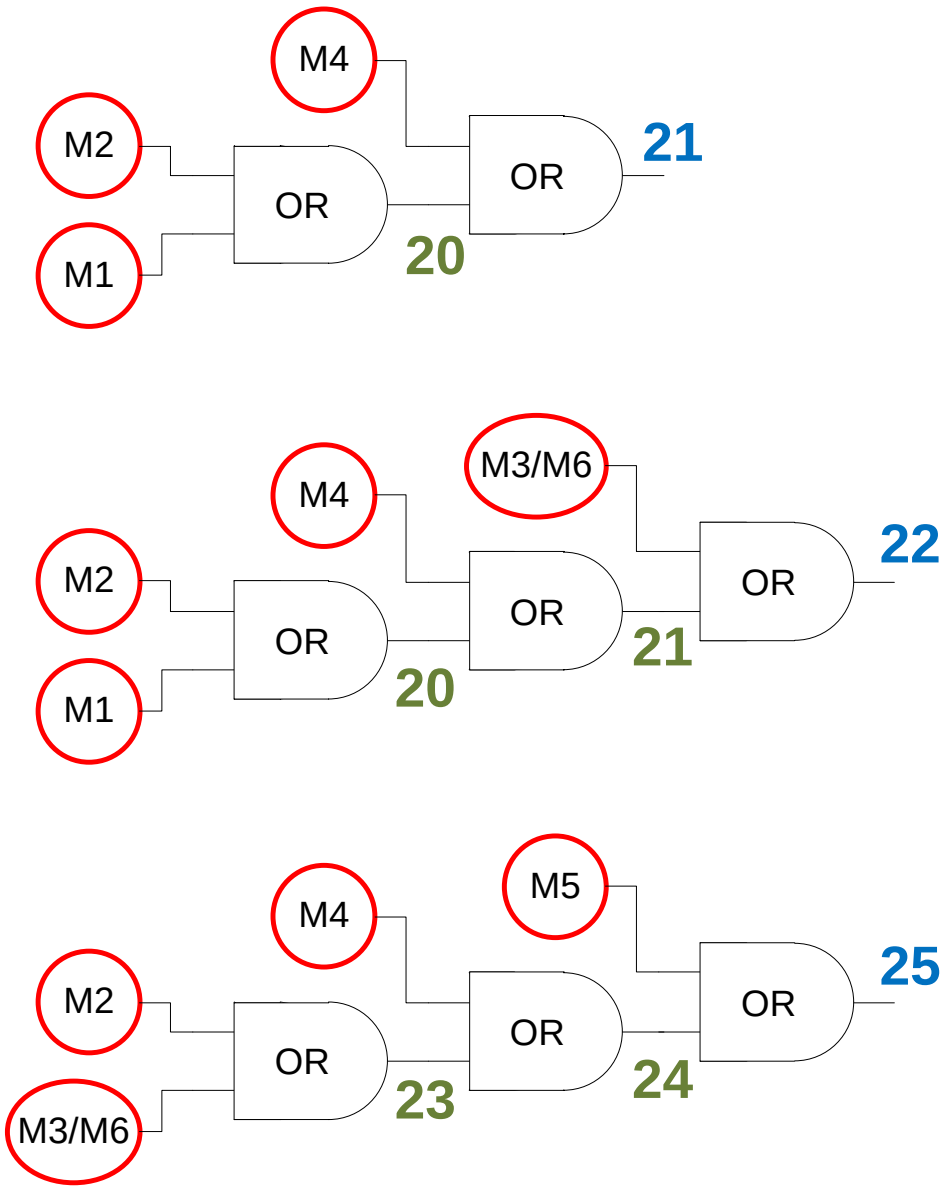

Input Signals
Intermediate Signals
Output Signals

Figure 12. Mode Signal Numbering Template for Logic Testing Model

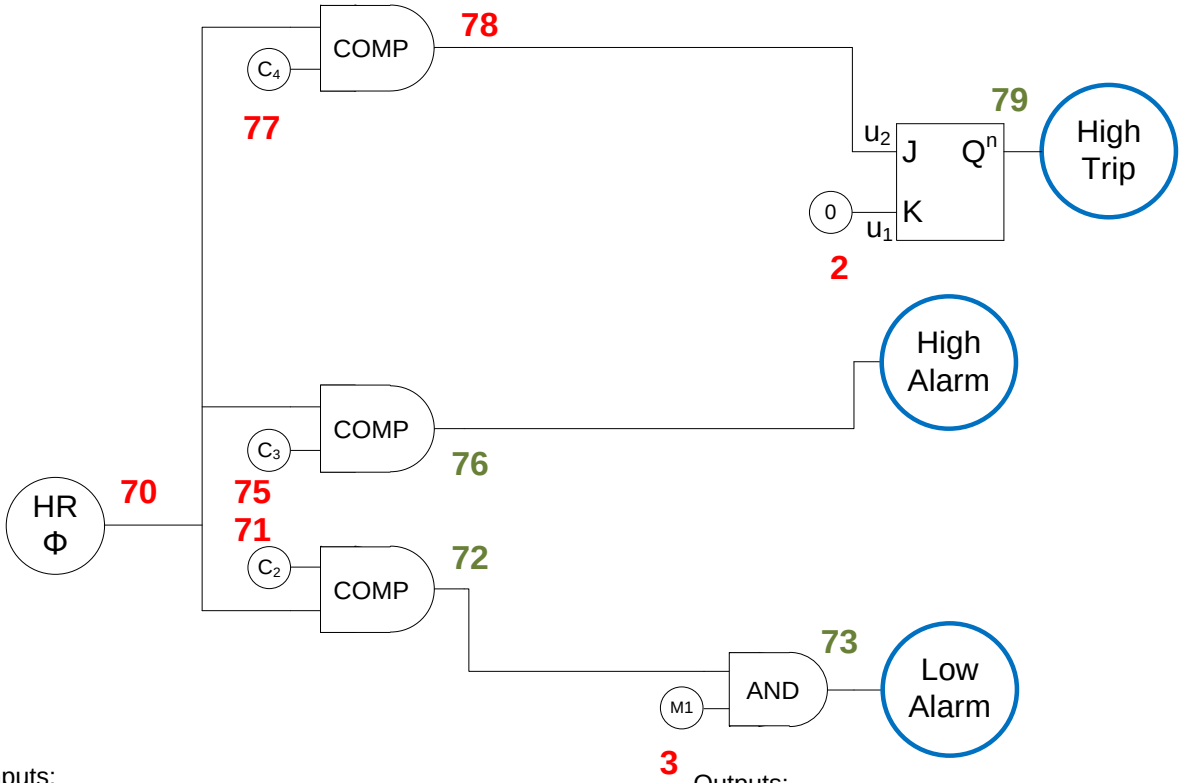

Inputs:
HR Φ = High Range Flux
M1: Variable to determine mode
Equal to 1 if in Mode 1
Otherwise equal to 0.
C4 = High Trip Level
C3 = High Alarm Level
C2 = Low Alarm Level

Outputs:
High Alarm: High alarm signal (1 = On, 0 = Off)
Low Alarm: Low alarm signal (1 = On, 0 = Off)
High Trip: High trip signal (1 = On, 0 = Off)

Figure 13. High Range Flux Logic

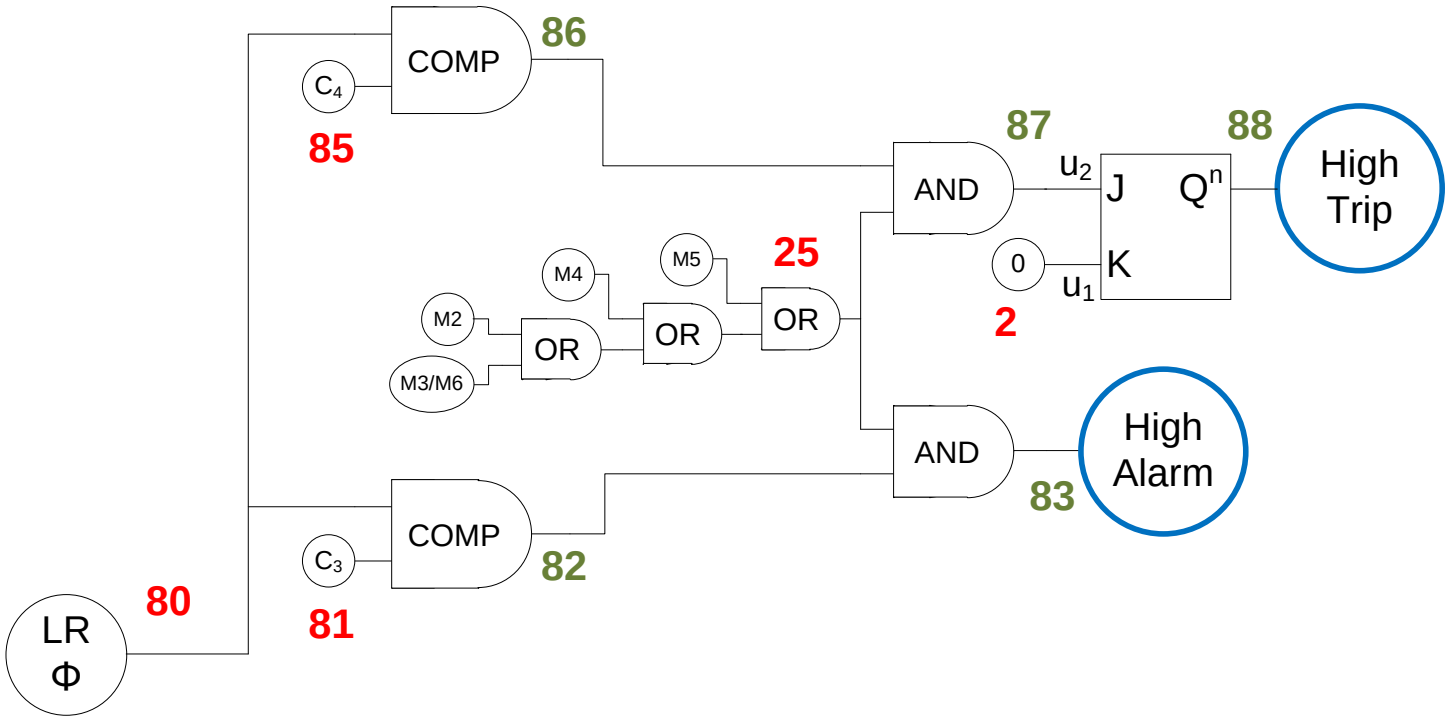

Inputs:
LR Φ = Low Range Flux
M2, M3, M4, M5: Variables to determine which mode
Equal to 1 if in that mode
Otherwise equal to 0.
C4 = High Trip Level
C3 = High Alarm Level

Outputs:
High Alarm: High alarm signal (1 = On, 0 = Off)
High Trip: High trip signal (1 = On, 0 = Off)

Figure 14. Low Range Flux Logic

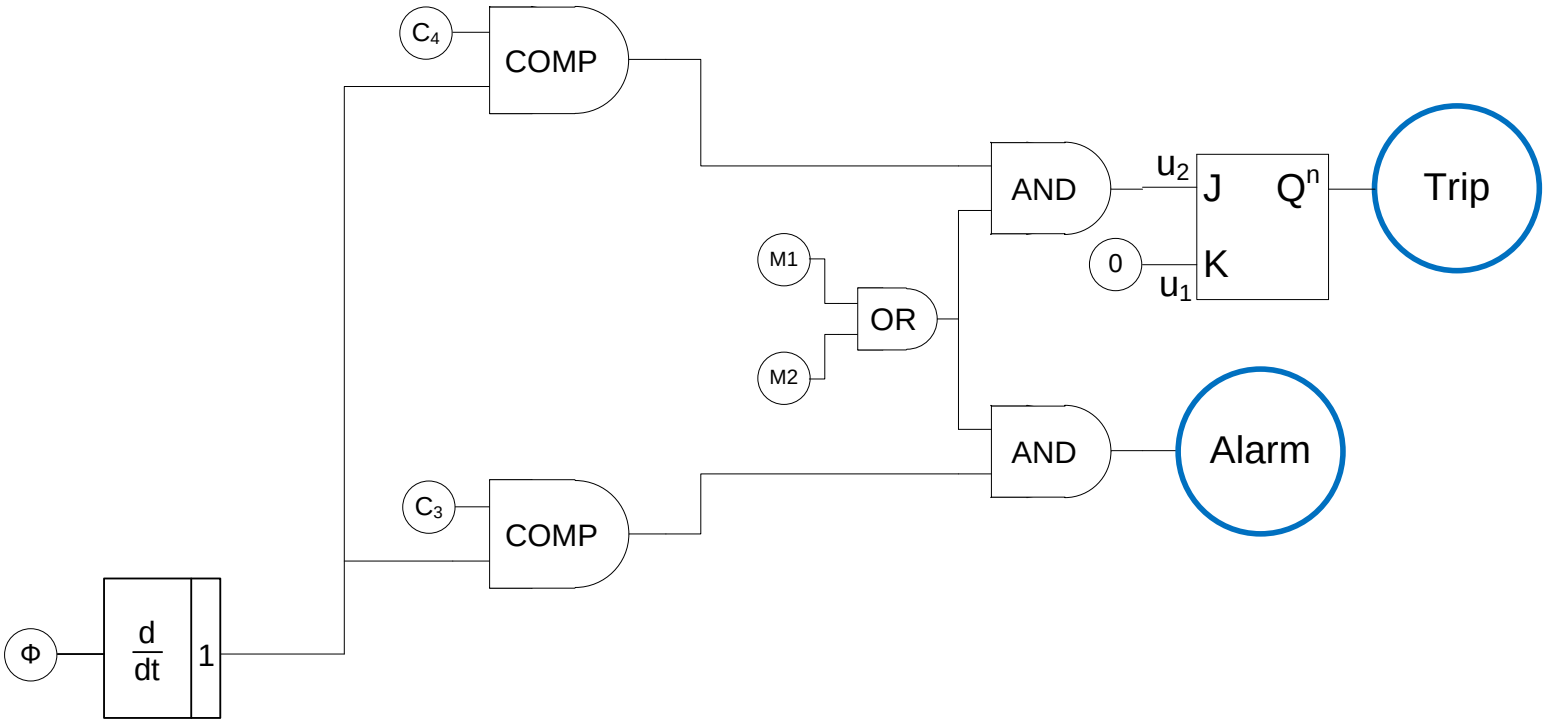

Inputs:
Φ = Flux
M1, M2: Variables to determine which mode
Equal to 1 if in that mode
Otherwise equal to 0.
C4 = Low Trip Level
C3 = Low Alarm Level

Outputs:
Alarm: Alarm signal (1 = On, 0 = Off)
Trip: Trip signal (1 = On, 0 = Off)

Figure 15. Negative Flux Rate Logic

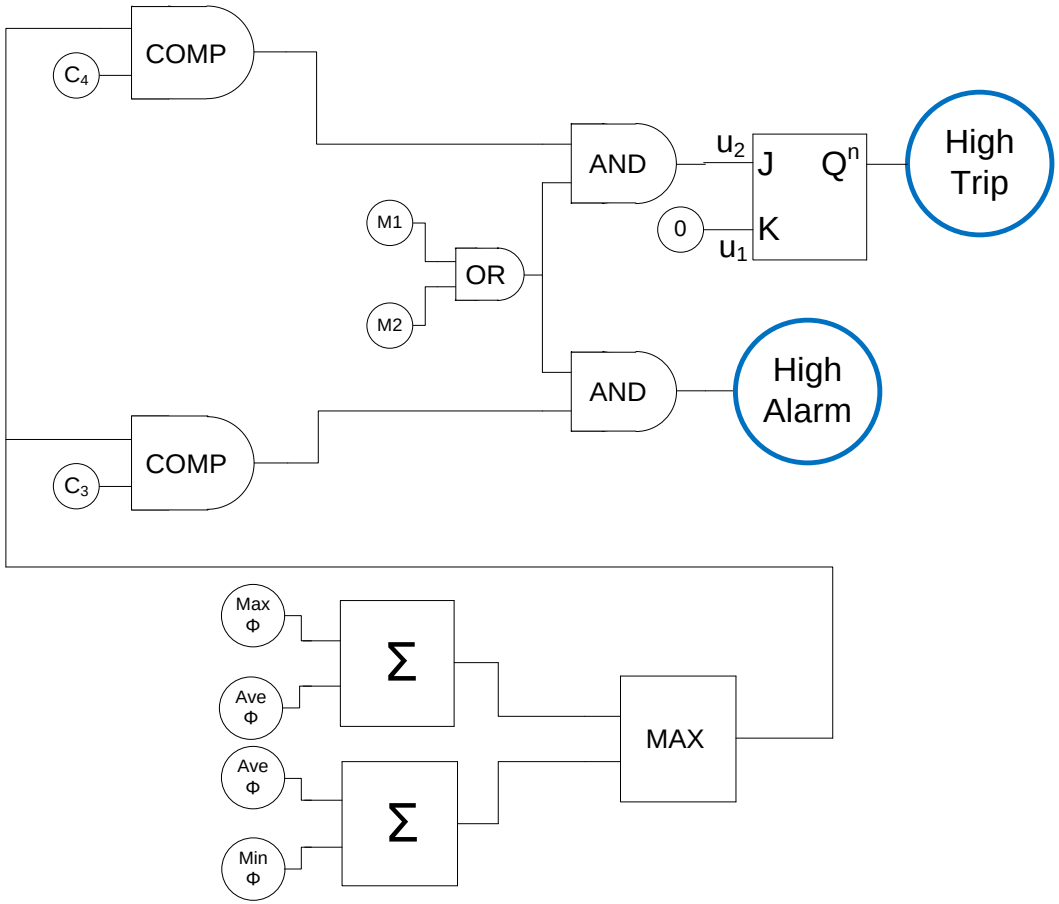

Inputs:
Max Φ = Maximum Quadrant Flux
Min Φ = Minimum Quadrant Flux
Ave Φ = Average Quadrant Flux
M1, M2: Variables to determine which mode
Equal to 1 if in that mode
Otherwise equal to 0.
C4 = High Trip Level
C3 = High Alarm Level

Outputs:
High Alarm: High alarm signal (1 = On, 0 = Off)
High Trip: High trip signal (1 = On, 0 = Off)

Figure 16. Quadrant Power Ratio Logic

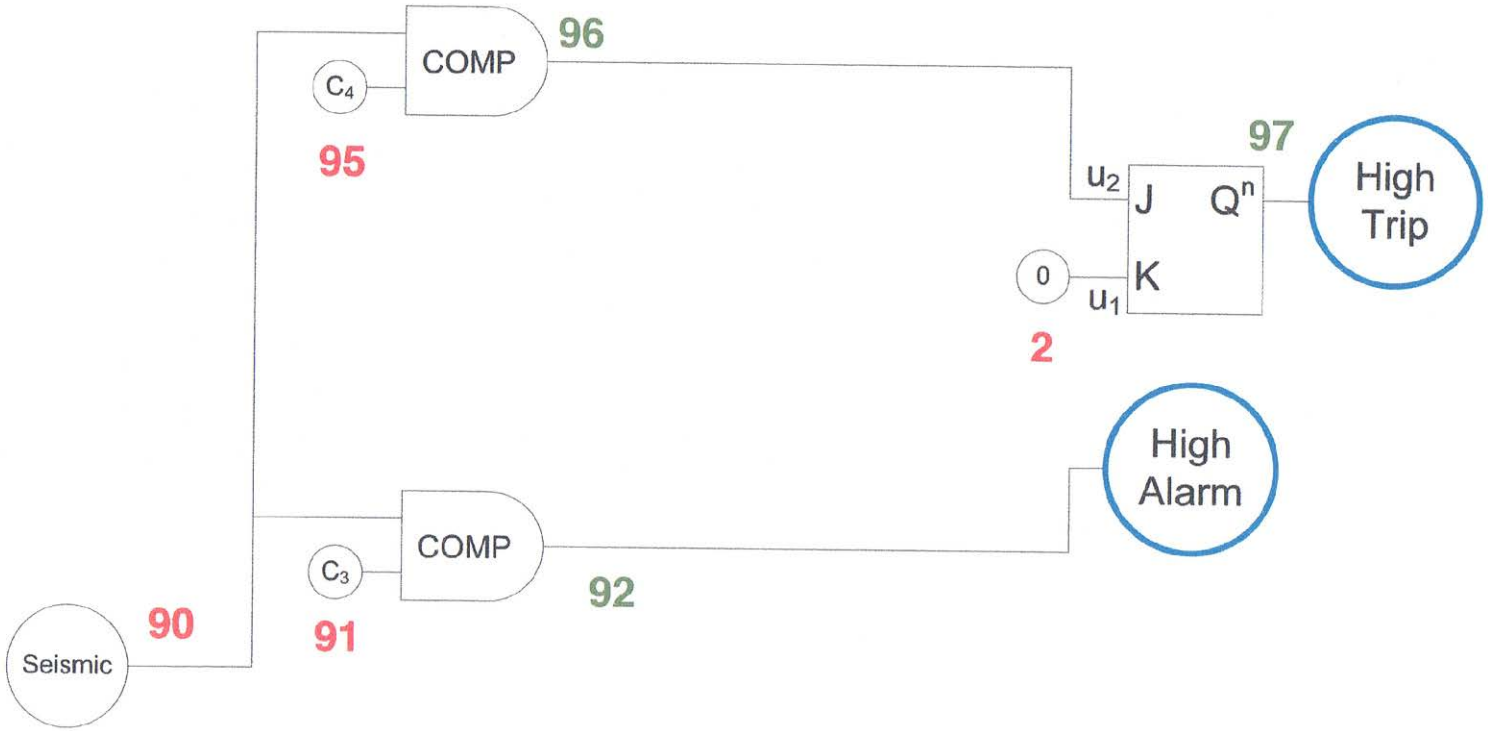

Inputs:
C4 = High Trip Level
C3 = High Alarm Level
Seismic = Seismic Level Measurement

Outputs:
High Alarm: High alarm signal (1 = On, 0 = Off)
High Trip: High trip signal (1 = On, 0 = Off)

Figure 17. Seismic Logic

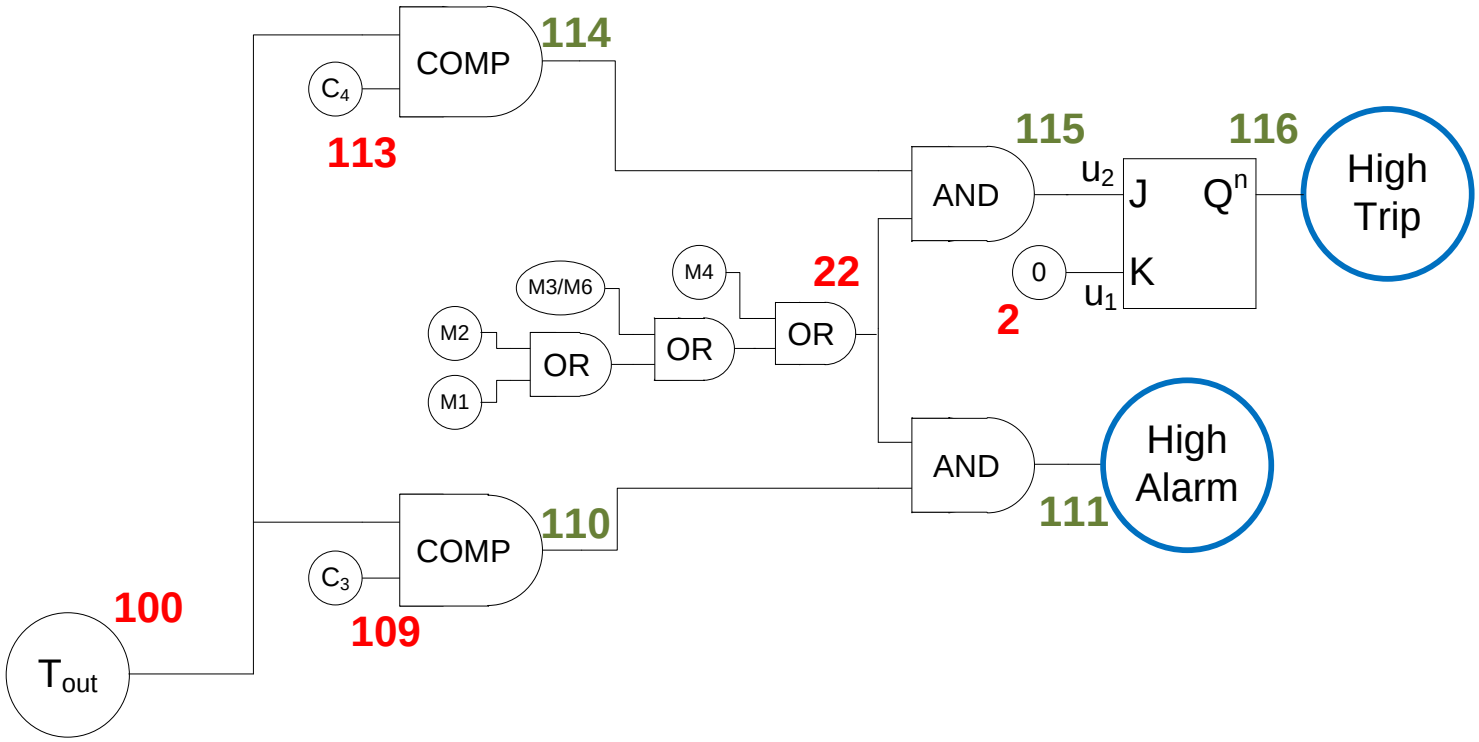

Inputs:
M1, M2, M3, M4: Variables to determine which mode
Equal to 1 if in that mode
Otherwise equal to 0.
C4 = High Trip Level
C3 = High Alarm Level
T_{out} = Outlet Temperature

Outputs:
High Alarm: High alarm signal (1 = On, 0 = Off)
High Trip: High trip signal (1 = On, 0 = Off)

Figure 18. SCA Outlet Temperature Logic

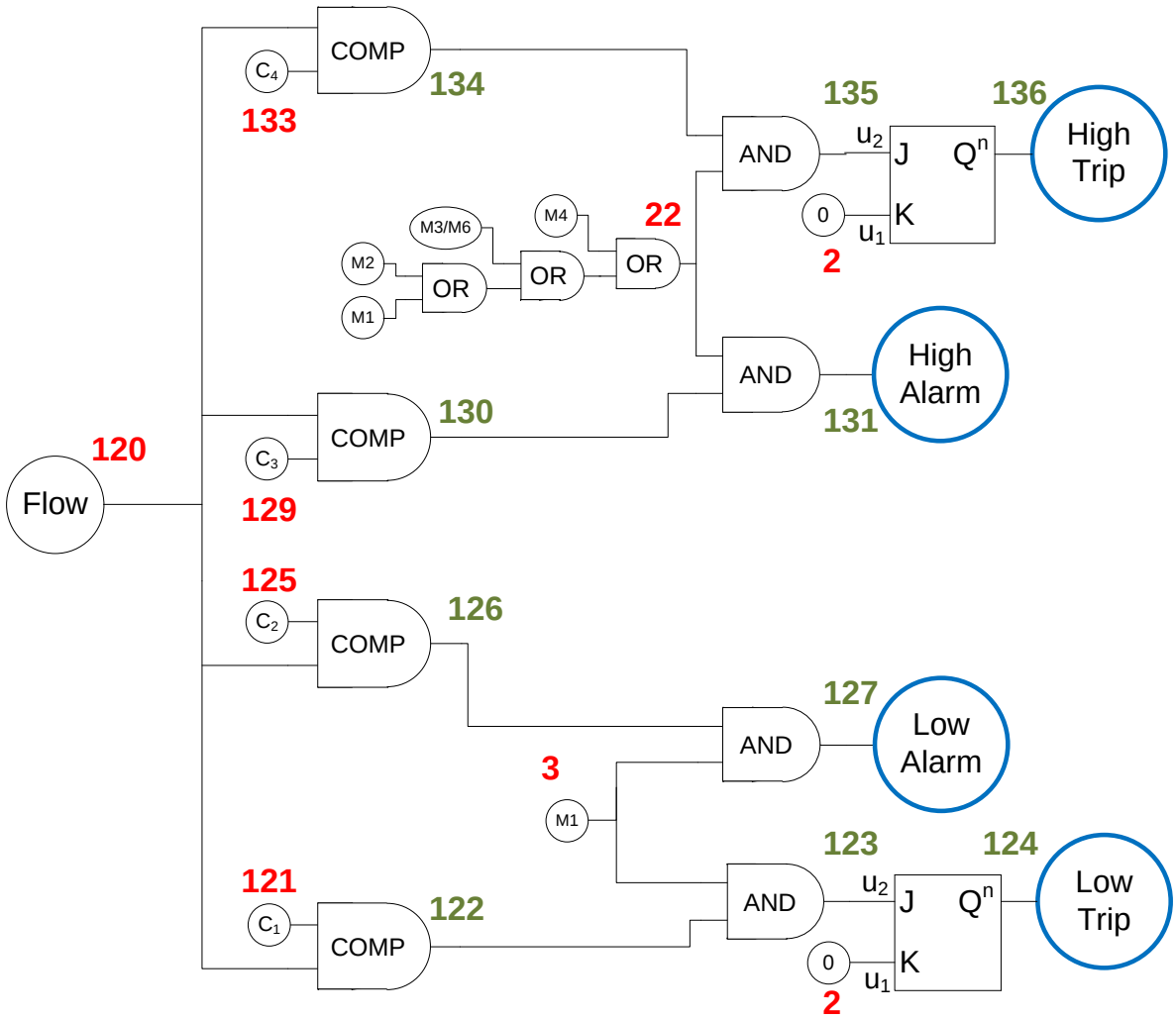

Inputs:
M1, M2, M3, M4: Variables to determine which mode
Equal to 1 if in that mode
Otherwise equal to 0.
C4 = High Trip Level
C3 = High Alarm Level
C2 = Low Alarm Level
C1 = Low Trip Level
Flow = SCA Flow Measurement

Outputs:
High Alarm: High alarm signal (1 = On, 0 = Off)
Low Alarm: Low alarm signal (1 = On, 0 = Off)
High Trip: High trip signal (1 = On, 0 = Off)
Low Trip: Low trip signal (1 = On, 0 = Off)

Figure 19. SCA Flow Logic

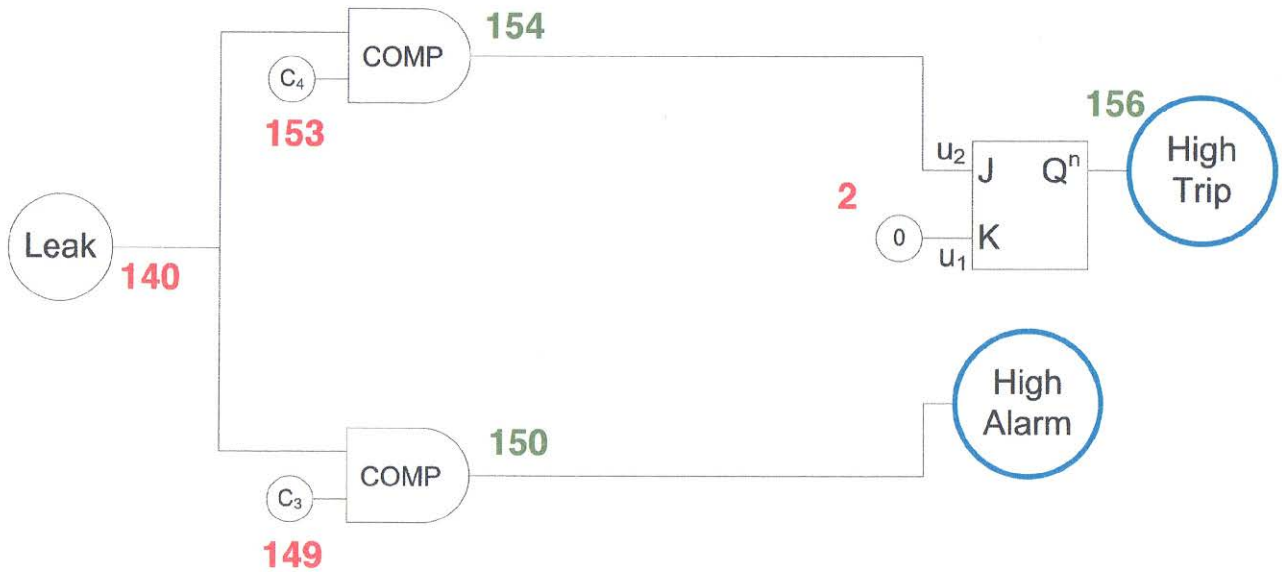

Inputs:
C4 = High Trip Level
C3 = High Alarm Level
Leak = SCA Leak Measurement

Outputs:
High Alarm: High alarm signal (1 = On, 0 = Off)
High Trip: High trip signal (1 = On, 0 = Off)

Figure 20. SCA Leak Logic

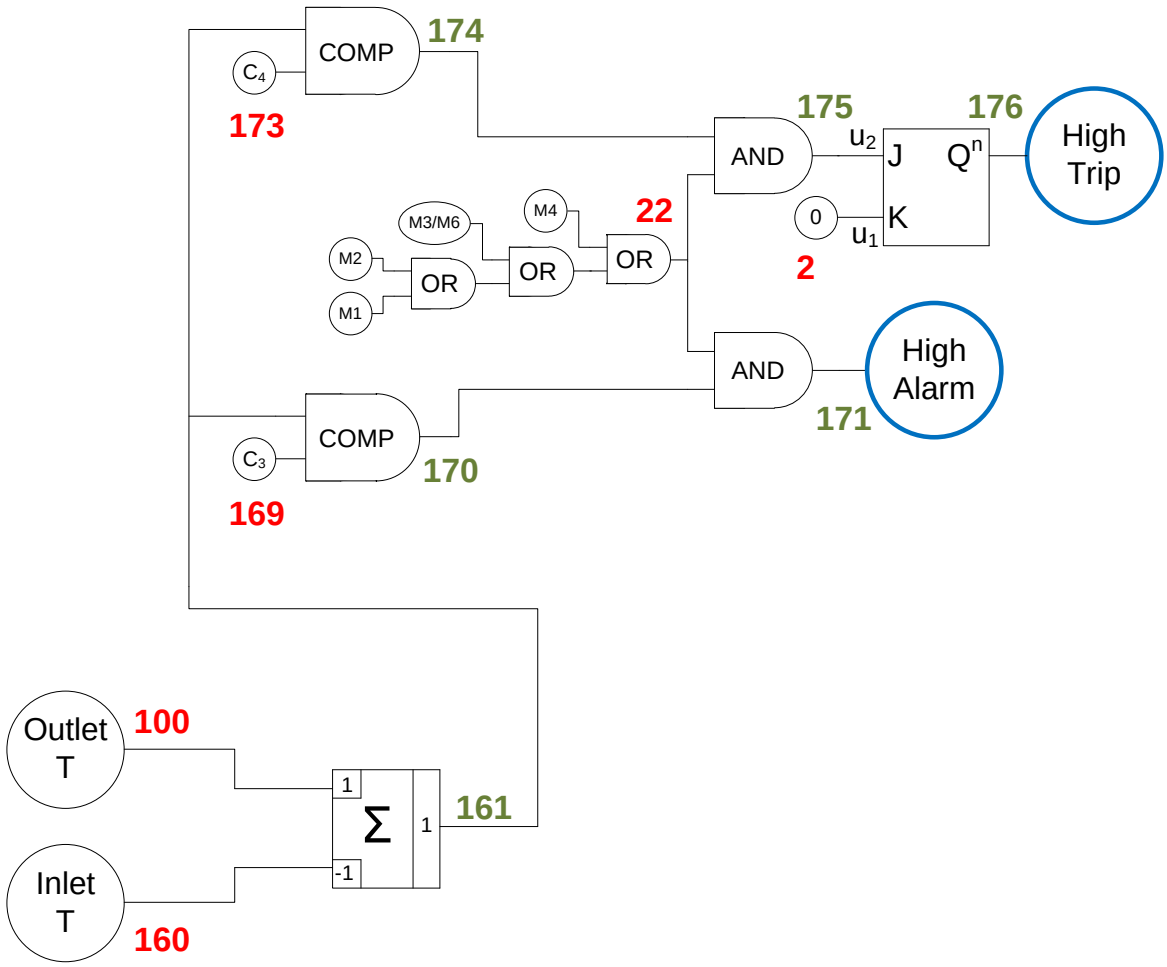

Inputs:
M1, M2, M3, M4: Variables to determine which mode
Equal to 1 if in that mode
Otherwise equal to 0.
C4 = High Trip Level
C3 = High Alarm Level
Outlet T = Outlet Temperature
Inlet T = Inlet Temperature

Outputs:
High Alarm: High alarm signal (1 = On, 0 = Off)
High Trip: High trip signal (1 = On, 0 = Off)

Figure 21. SCA ΔT Logic

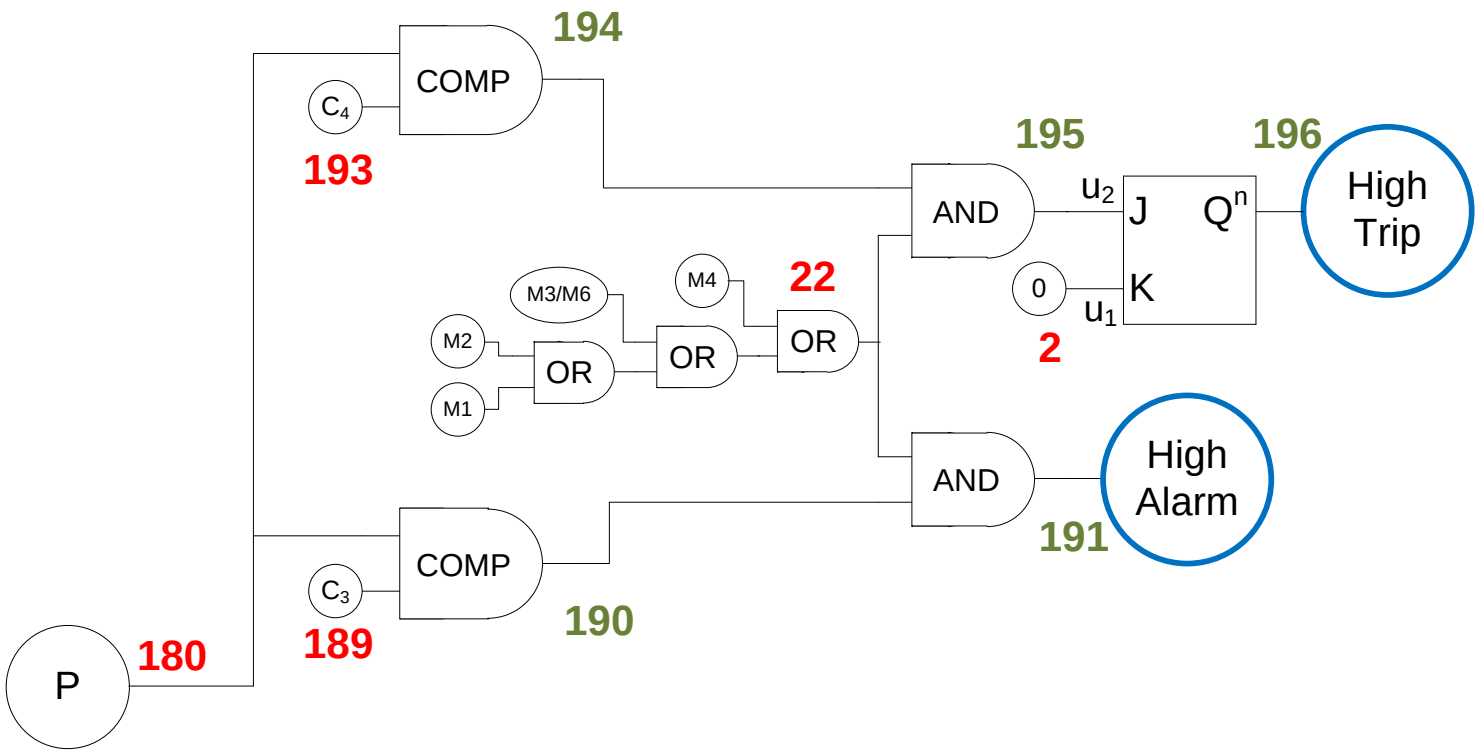

Inputs:
P = SCA Pressure
M1, M2, M3, M4: Variables to determine which mode
Equal to 1 if in that mode
Otherwise equal to 0.
C4 = High Trip Level
C3 = High Alarm Level

Outputs:
High Alarm: High alarm signal (1 = On, 0 = Off)
High Trip: High trip signal (1 = On, 0 = Off)

Figure 22. SCA Pressure Logic

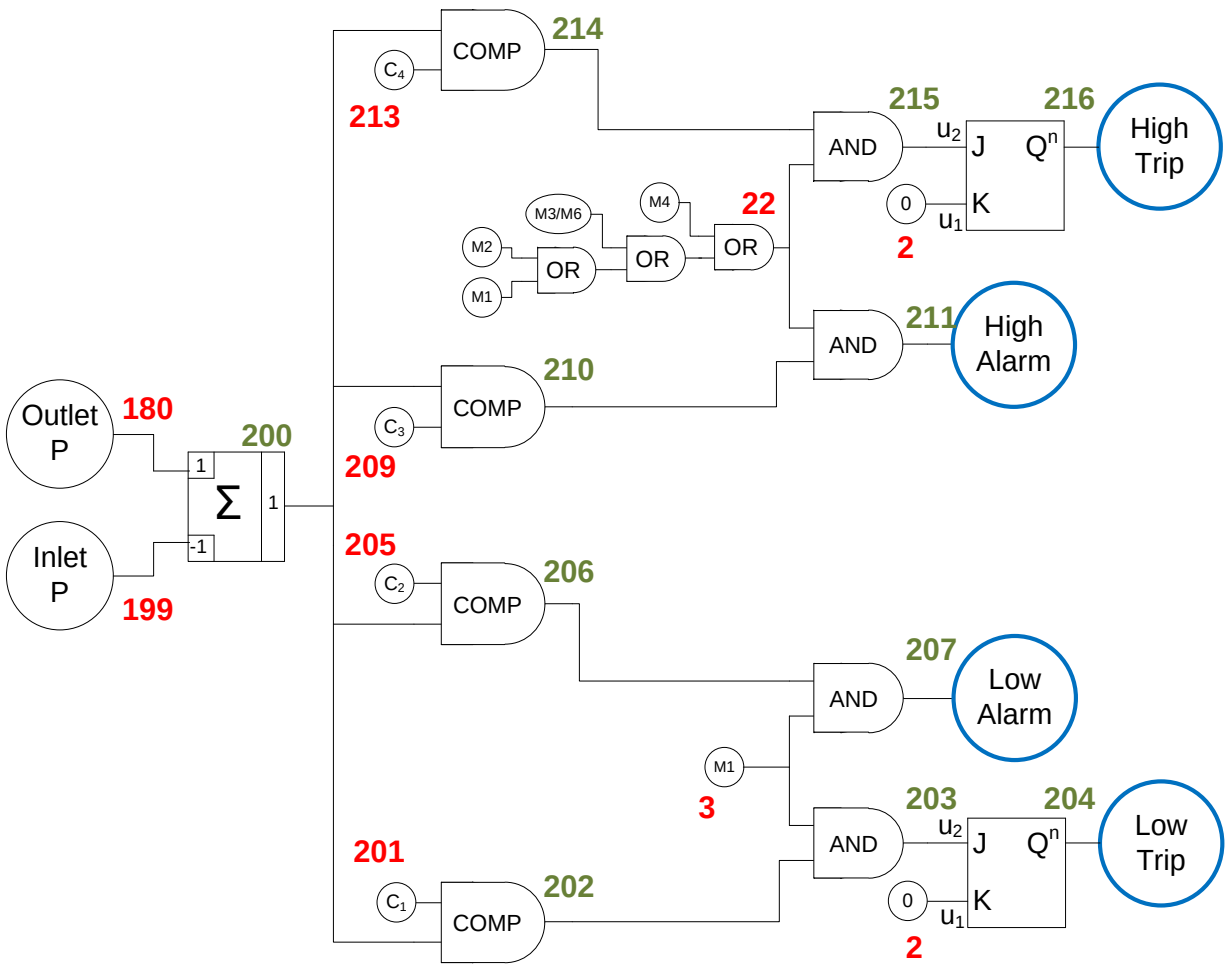

Inputs:
M1, M2, M3, M4: Variables to determine which mode
Equal to 1 if in that mode
Otherwise equal to 0.
C4 = High Trip Level
C3 = High Alarm Level
C2 = Low Alarm Level
C1 = Low Trip Level
Inlet P = Inlet Pressure to Pump
Outlet P = Outlet Pressure to Pump

Outputs:
High Alarm: High alarm signal (1 = On, 0 = Off)
Low Alarm: Low alarm signal (1 = On, 0 = Off)
High Trip: High trip signal (1 = On, 0 = Off)
Low Trip: Low trip signal (1 = On, 0 = Off)

Figure 23. SCA Pump ΔP Logic

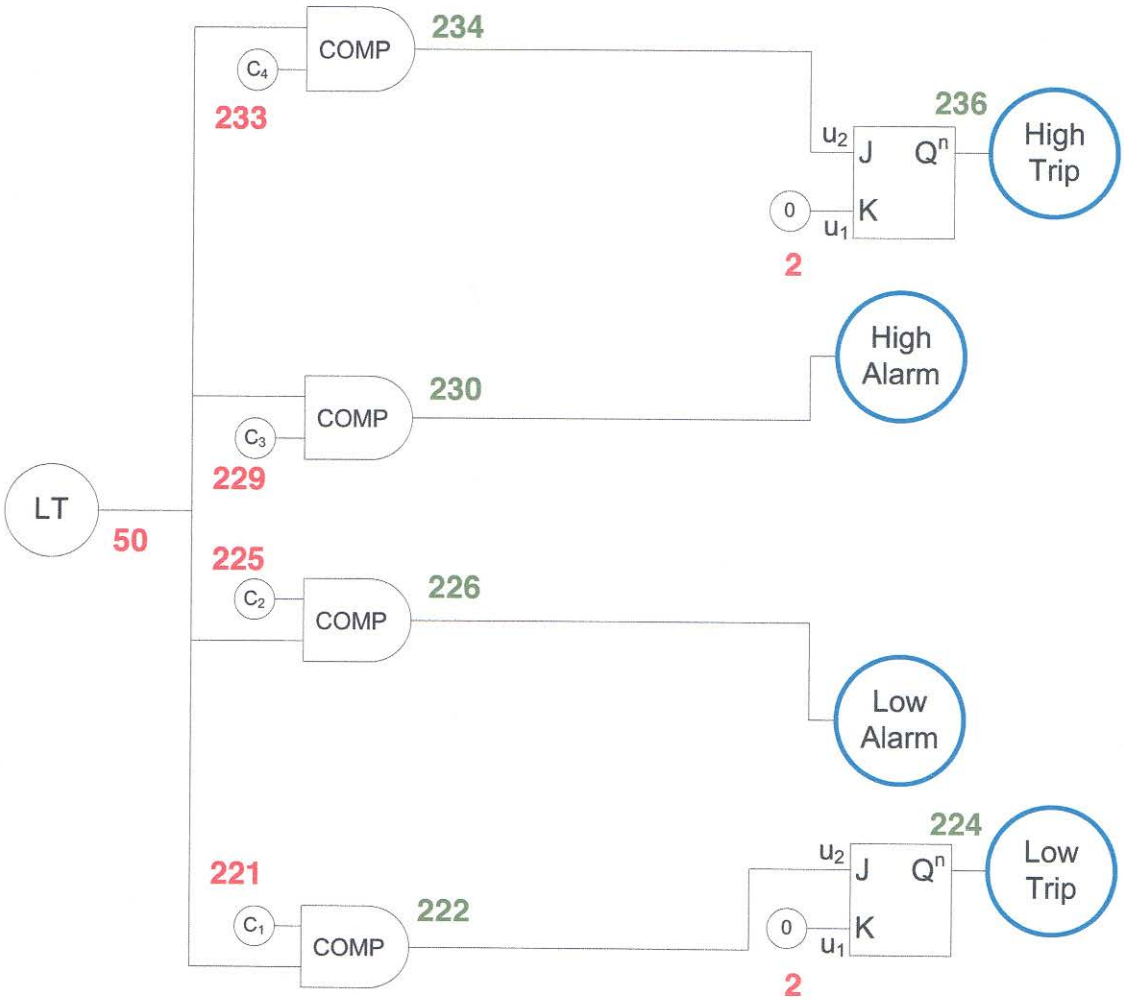

Inputs:
LT = Tank Level from Level Transmitter
C4 = High Trip Level
C3 = High Alarm Level
C2 = Low Alarm Level
C1 = Low Trip Level

Outputs:
High Alarm: High alarm signal (1 = On, 0 = Off)
Low Alarm: Low alarm signal (1 = On, 0 = Off)
High Trip: High trip signal (1 = On, 0 = Off)
Low Trip: Low trip signal (1 = On, 0 = Off)

Figure 24. SCA Tank Level Logic

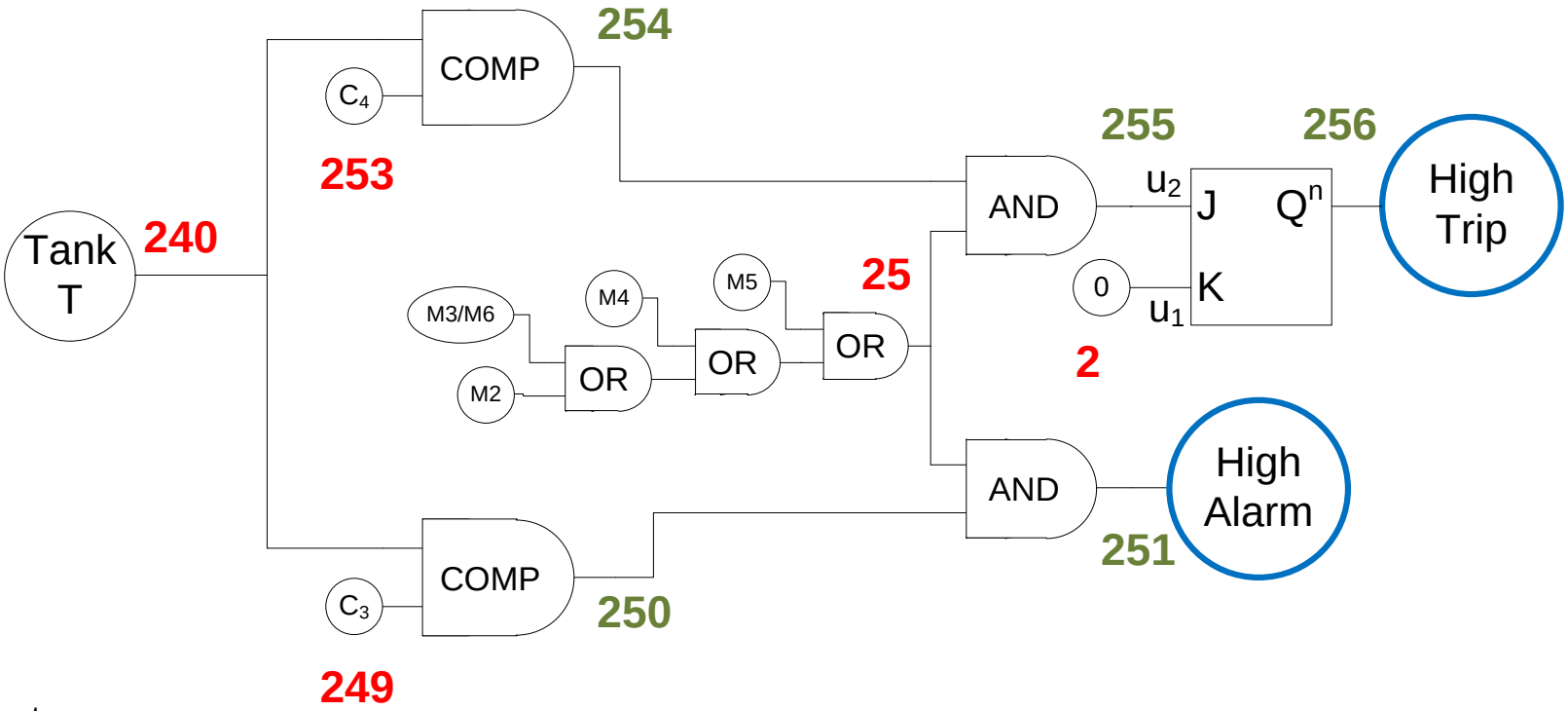

Inputs:
M2, M3, M4, M5: Variables to determine which mode
Equal to 1 if in that mode
Otherwise equal to 0.
C4 = High Trip Level
C3 = High Alarm Level
Tank T = Tank Temperature

Outputs:
High Alarm: High alarm signal (1 = On, 0 = Off)
High Trip: High trip signal (1 = On, 0 = Off)

Figure 25. SCA Tank Temperature Logic

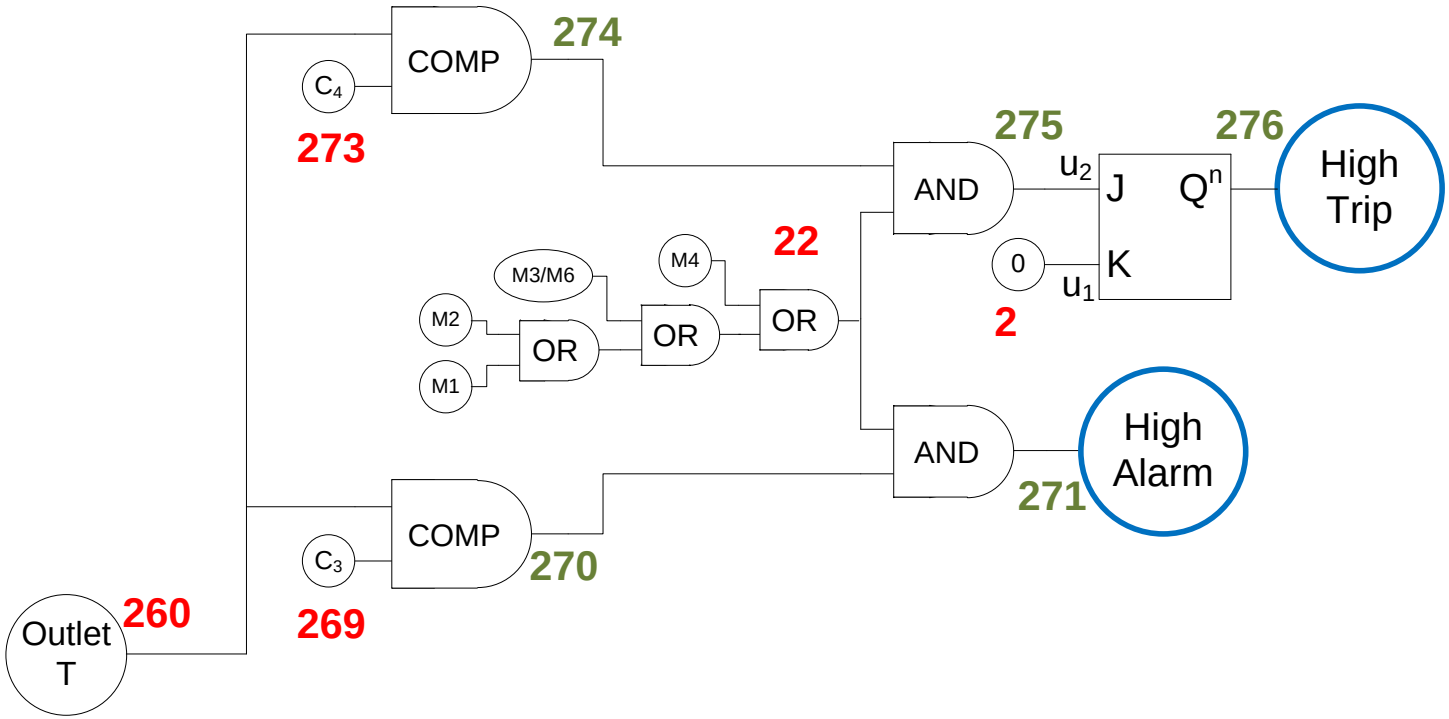

Inputs:
M1, M2, M3, M4: Variables to determine which mode
Equal to 1 if in that mode
Otherwise equal to 0.
C4 = High Trip Level
C3 = High Alarm Level
Outlet T = Outlet Temperature

Outputs:
High Alarm: High alarm signal (1 = On, 0 = Off)
High Trip: High trip signal (1 = On, 0 = Off)

Figure 26. Target Outlet Temperature Logic

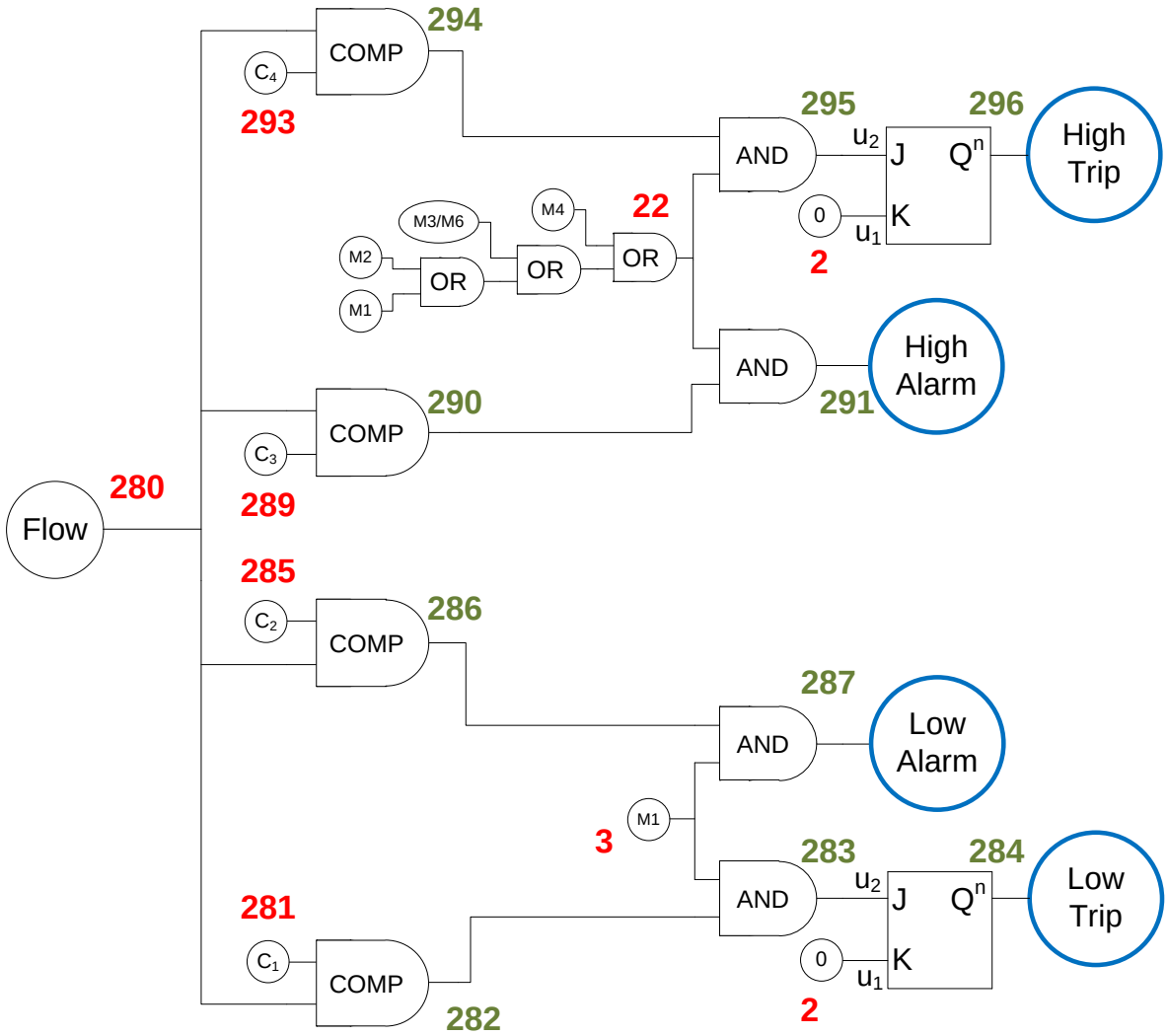

Inputs:
Flow = Target Flow
M1, M2, M3, M4: Variables to determine which mode
Equal to 1 if in that mode
Otherwise equal to 0.
C4 = High Trip Level
C3 = High Alarm Level
C2 = Low Alarm Level
C1 = Low Trip Level

Outputs:
High Alarm: High alarm signal (1 = On, 0 = Off)
Low Alarm: Low alarm signal (1 = On, 0 = Off)
High Trip: High trip signal (1 = On, 0 = Off)
Low Trip: Low trip signal (1 = On, 0 = Off)

Figure 27. Target Flow Logic

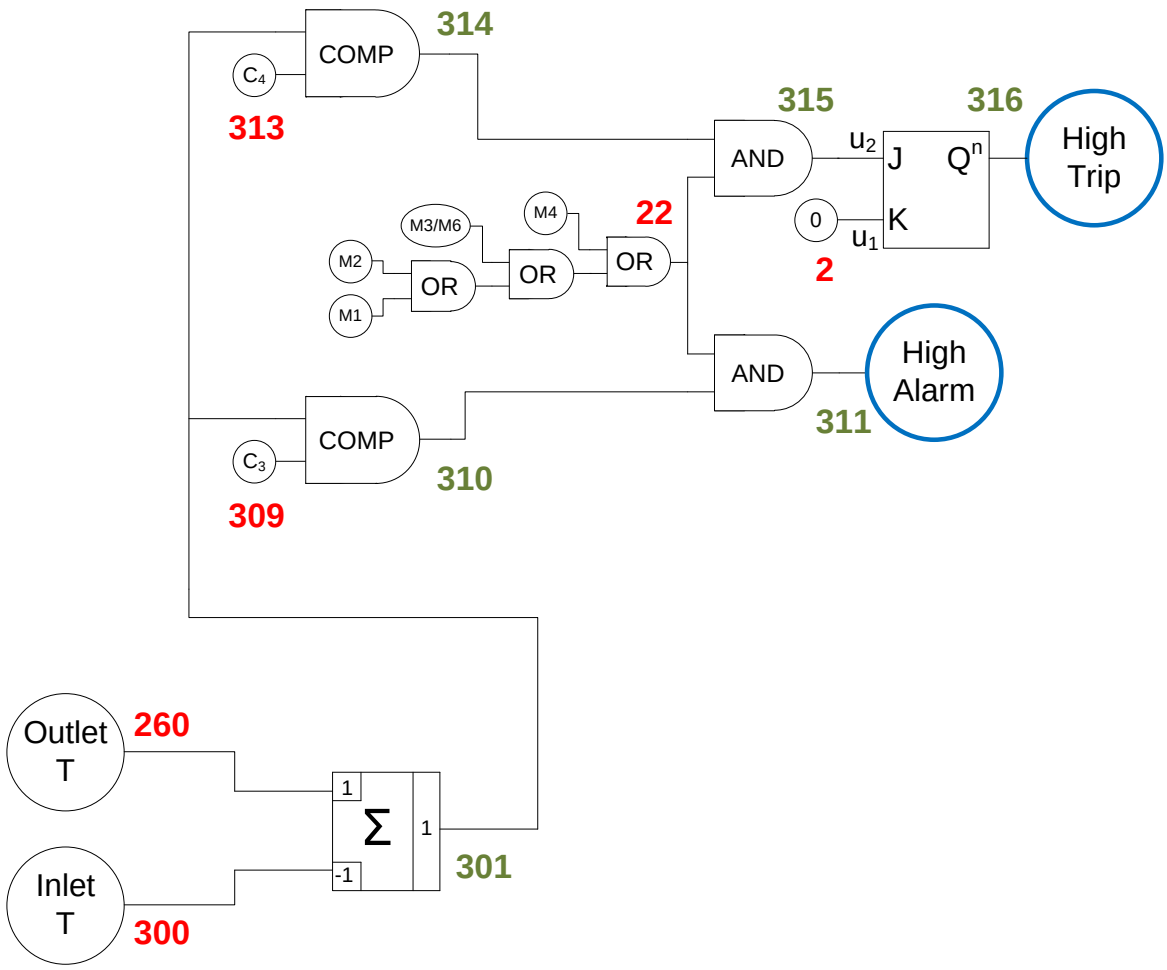

Inputs:
M1, M2, M3, M4: Variables to determine which mode
Equal to 1 if in that mode
Otherwise equal to 0.
C4 = High Trip Level
C3 = High Alarm Level
Outlet T = Outlet Temperature
Inlet T = Inlet Temperature

Outputs:
High Alarm: High alarm signal (1 = On, 0 = Off)
High Trip: High trip signal (1 = On, 0 = Off)

Figure 28. Target ΔT Logic

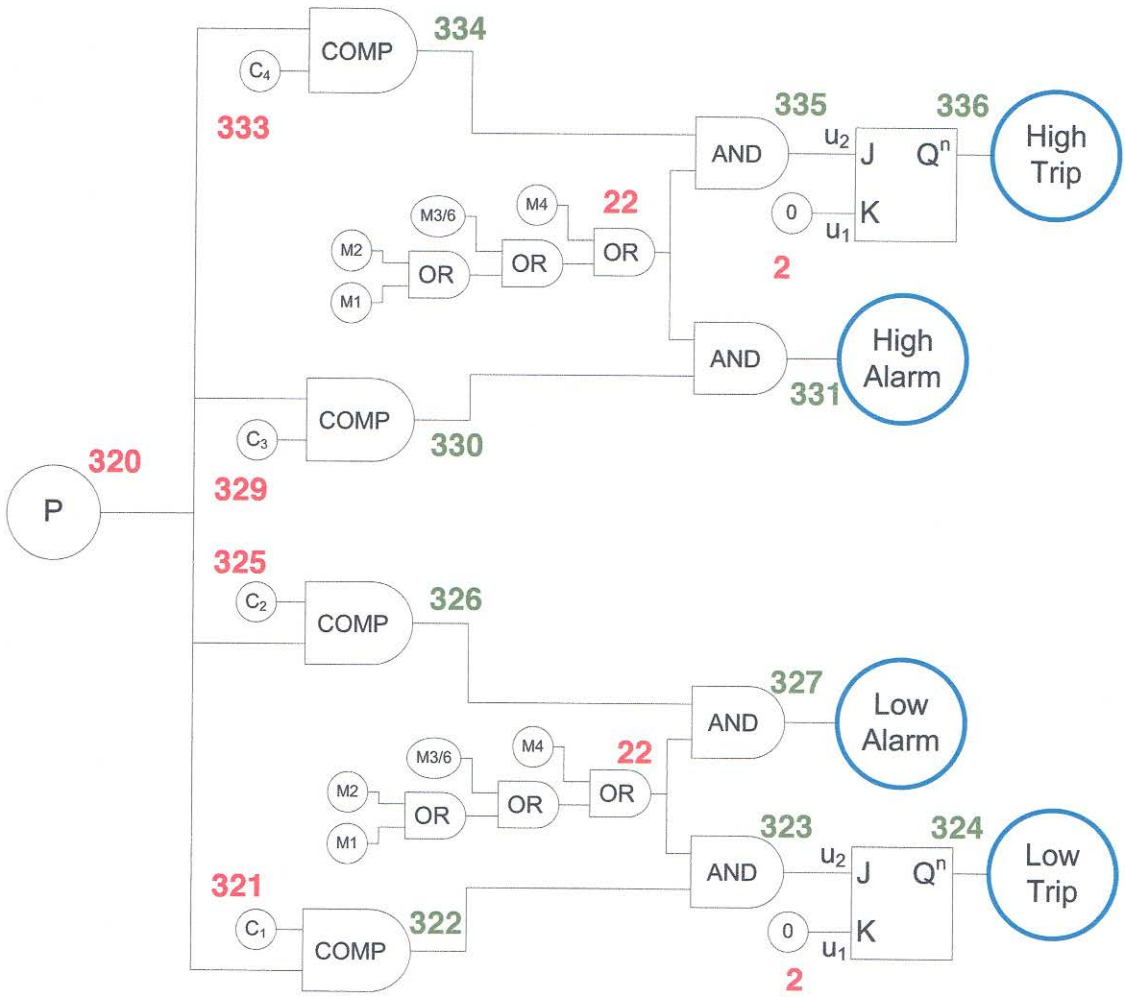

Inputs:
P = Target Pressure
M1, M2, M3, M4: Variables to determine which mode
Equal to 1 if in that mode
Otherwise equal to 0.
C4 = High Trip Level
C3 = High Alarm Level
C2 = Low Alarm Level
C1 = Low Trip Level

Outputs:
High Alarm: High alarm signal (1 = On, 0 = Off)
Low Alarm: Low alarm signal (1 = On, 0 = Off)
High Trip: High trip signal (1 = On, 0 = Off)
Low Trip: Low trip signal (1 = On, 0 = Off)

Figure 29. Target Pressure Logic

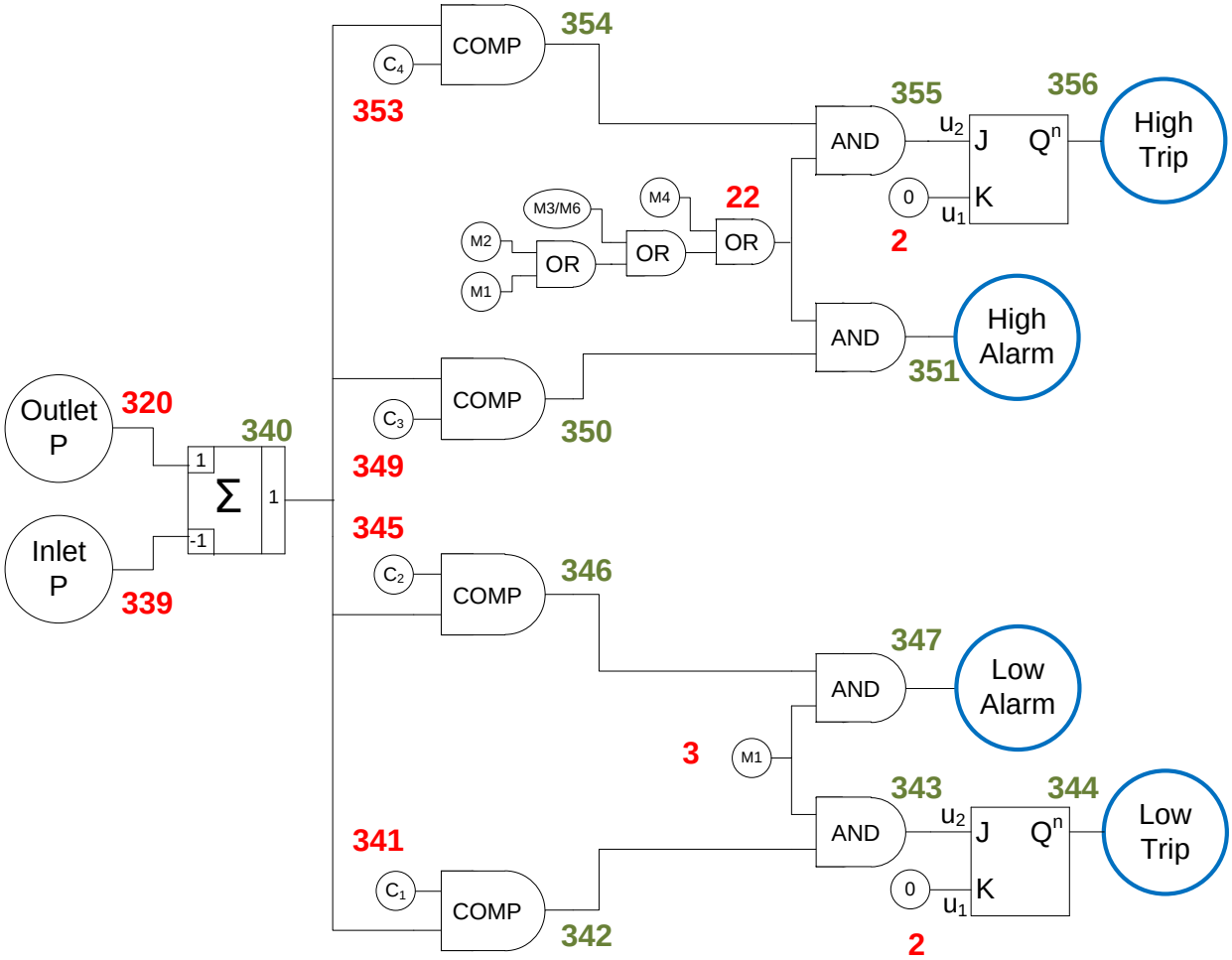

Inputs:
M1, M2, M3, M4: Variables to determine which mode
Equal to 1 if in that mode
Otherwise equal to 0.
C4 = High Trip Level
C3 = High Alarm Level
C2 = Low Alarm Level
C1 = Low Trip Level
Inlet P = Inlet Pressure to Pump
Outlet P = Outlet Pressure to Pump

Outputs:
High Alarm: High alarm signal (1 = On, 0 = Off)
Low Alarm: Low alarm signal (1 = On, 0 = Off)
High Trip: High trip signal (1 = On, 0 = Off)
Low Trip: Low trip signal (1 = On, 0 = Off)

Figure 30. Pump/Target ΔP Logic

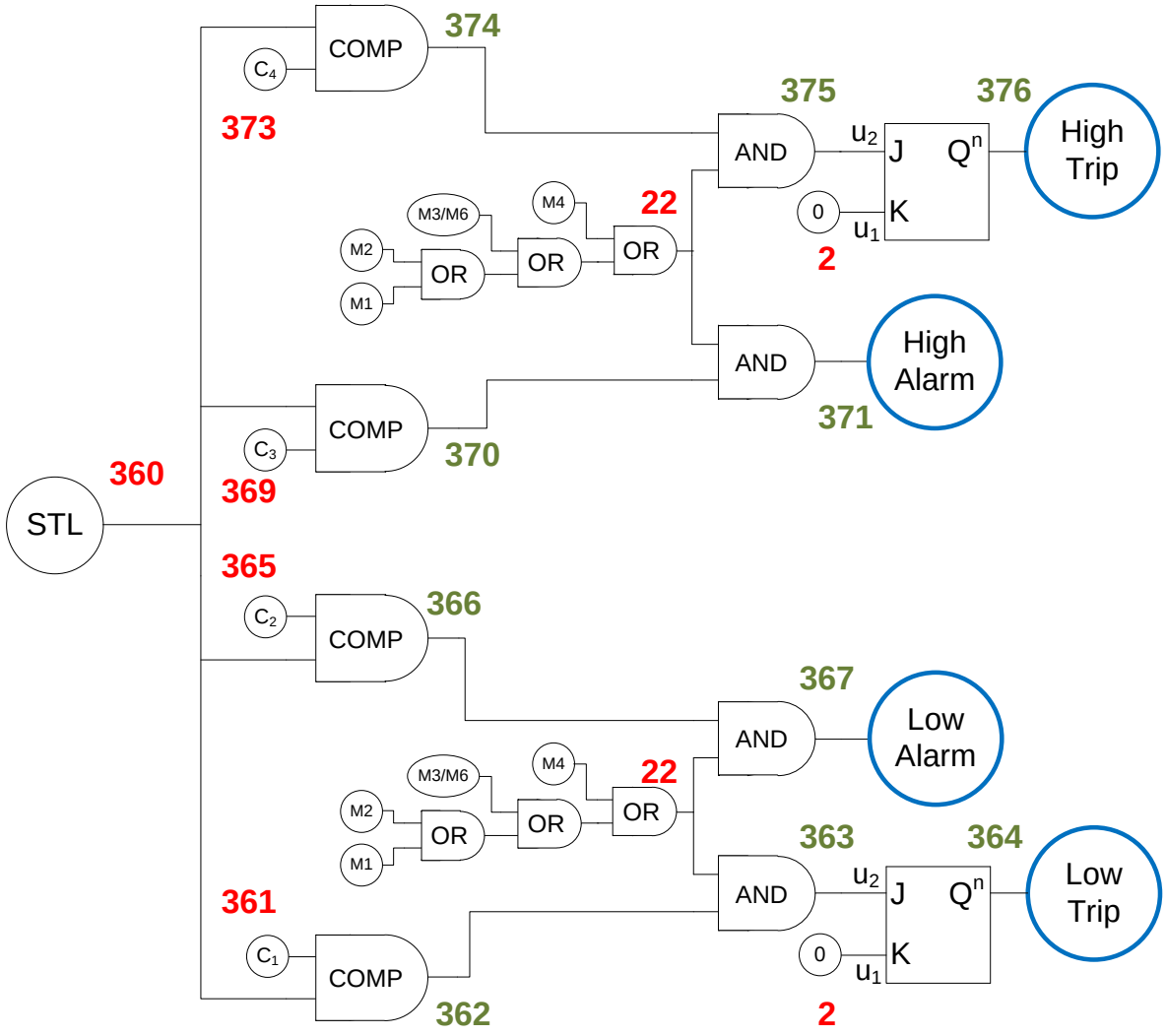

Inputs:
STL = Surge Tank Level
M1, M2, M3, M4: Variables to determine which mode
Equal to 1 if in that mode
Otherwise equal to 0.
C4 = High Trip Level
C3 = High Alarm Level
C2 = Low Alarm Level
C1 = Low Trip Level

Outputs:
High Alarm: High alarm signal (1 = On, 0 = Off)
Low Alarm: Low alarm signal (1 = On, 0 = Off)
High Trip: High trip signal (1 = On, 0 = Off)
Low Trip: Low trip signal (1 = On, 0 = Off)

Figure 31. Target Surge Tank Level Logic

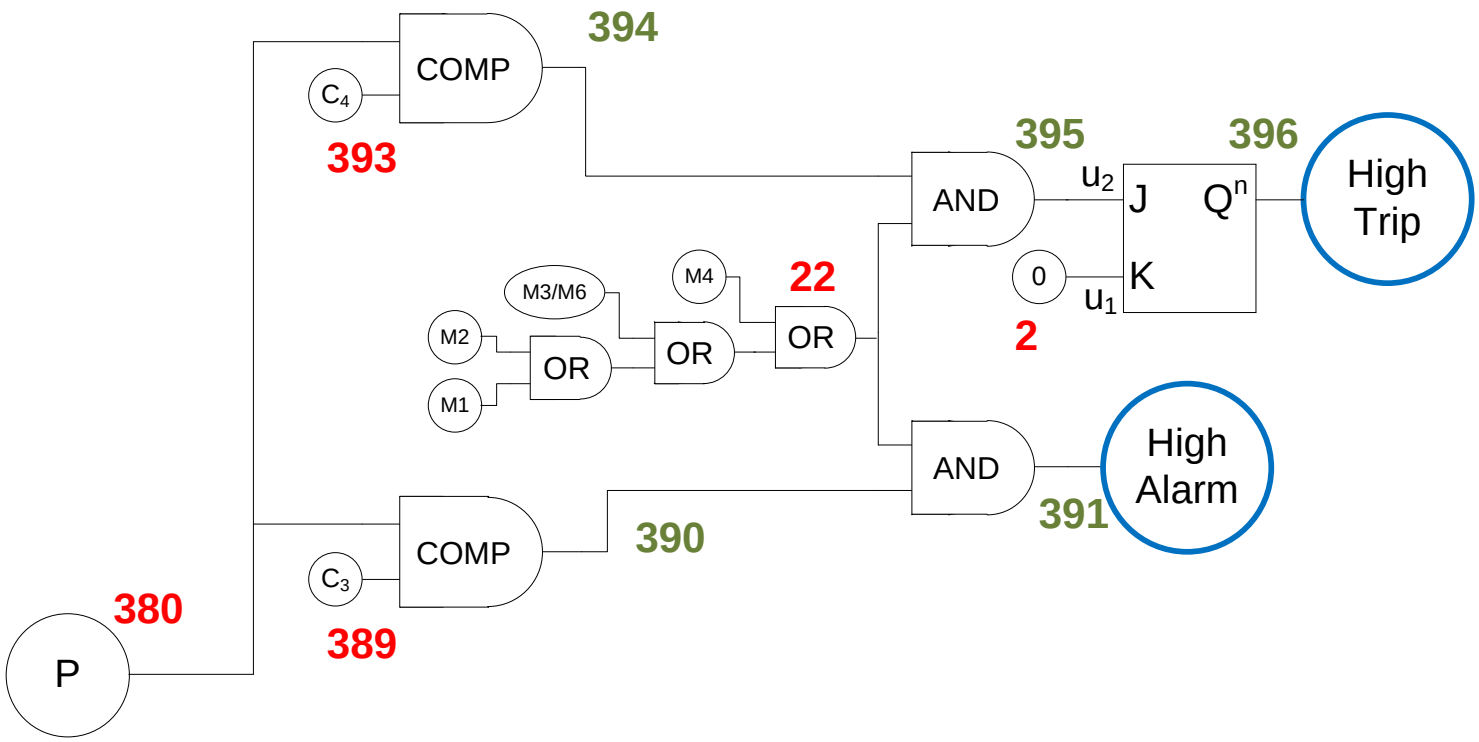

Inputs:
P = Secondary Pressure
M1, M2, M3, M4: Variables to determine which mode
Equal to 1 if in that mode
Otherwise equal to 0.
C4 = High Trip Level
C3 = High Alarm Level

Outputs:
High Alarm: High alarm signal (1 = On, 0 = Off)
High Trip: High trip signal (1 = On, 0 = Off)

Figure 32. Secondary Pressure Logic

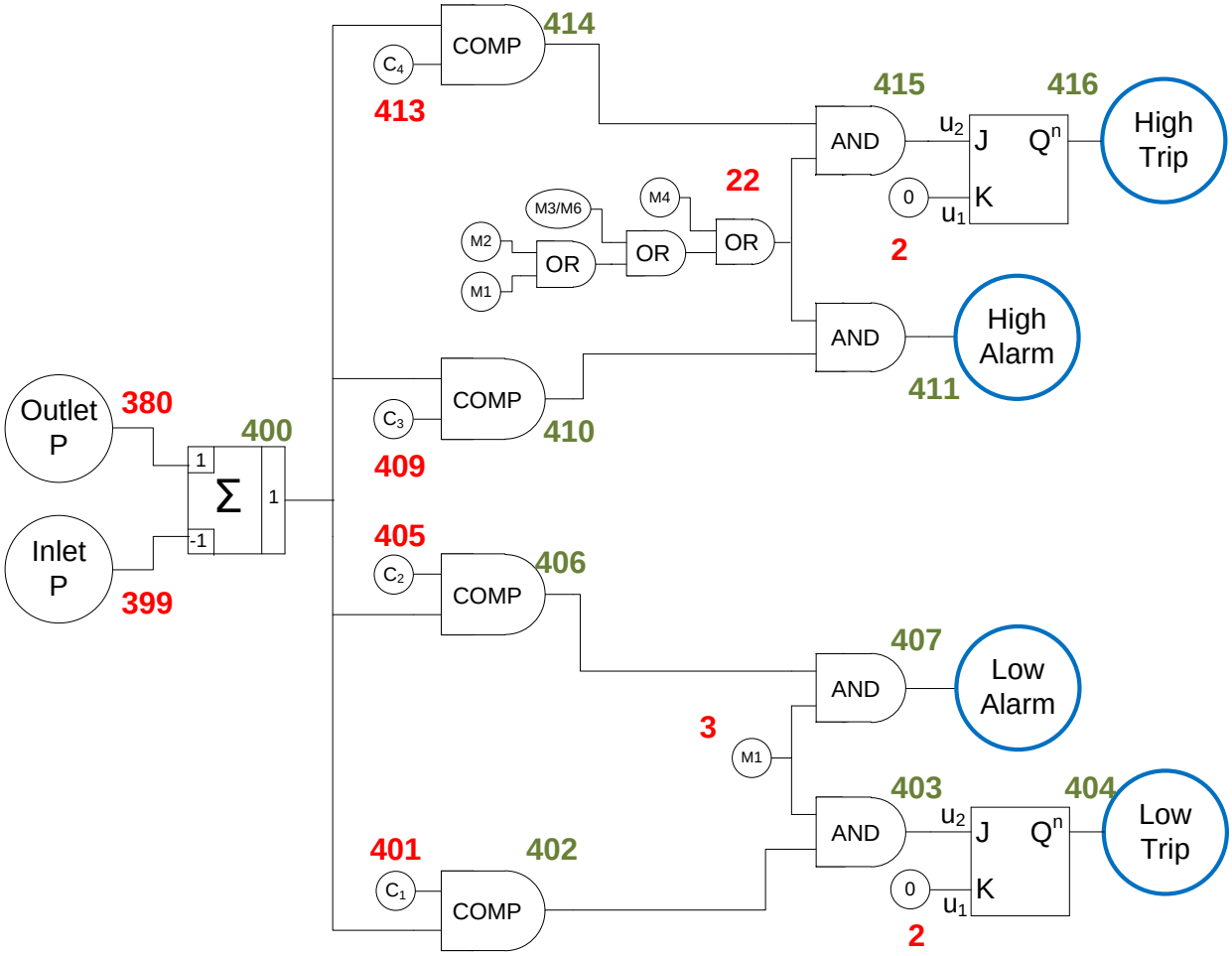

Inputs:
M1, M2, M3, M4: Variables to determine which mode
Equal to 1 if in that mode
Otherwise equal to 0.
C4 = High Trip Level
C3 = High Alarm Level
C2 = Low Alarm Level
C1 = Low Trip Level
Inlet P = Inlet Pressure to Pump
Outlet P = Outlet Pressure to Pump

Outputs:
High Alarm: High alarm signal (1 = On, 0 = Off)
Low Alarm: Low alarm signal (1 = On, 0 = Off)
High Trip: High trip signal (1 = On, 0 = Off)
Low Trip: Low trip signal (1 = On, 0 = Off)

Figure 33. Secondary Pump ΔP Logic

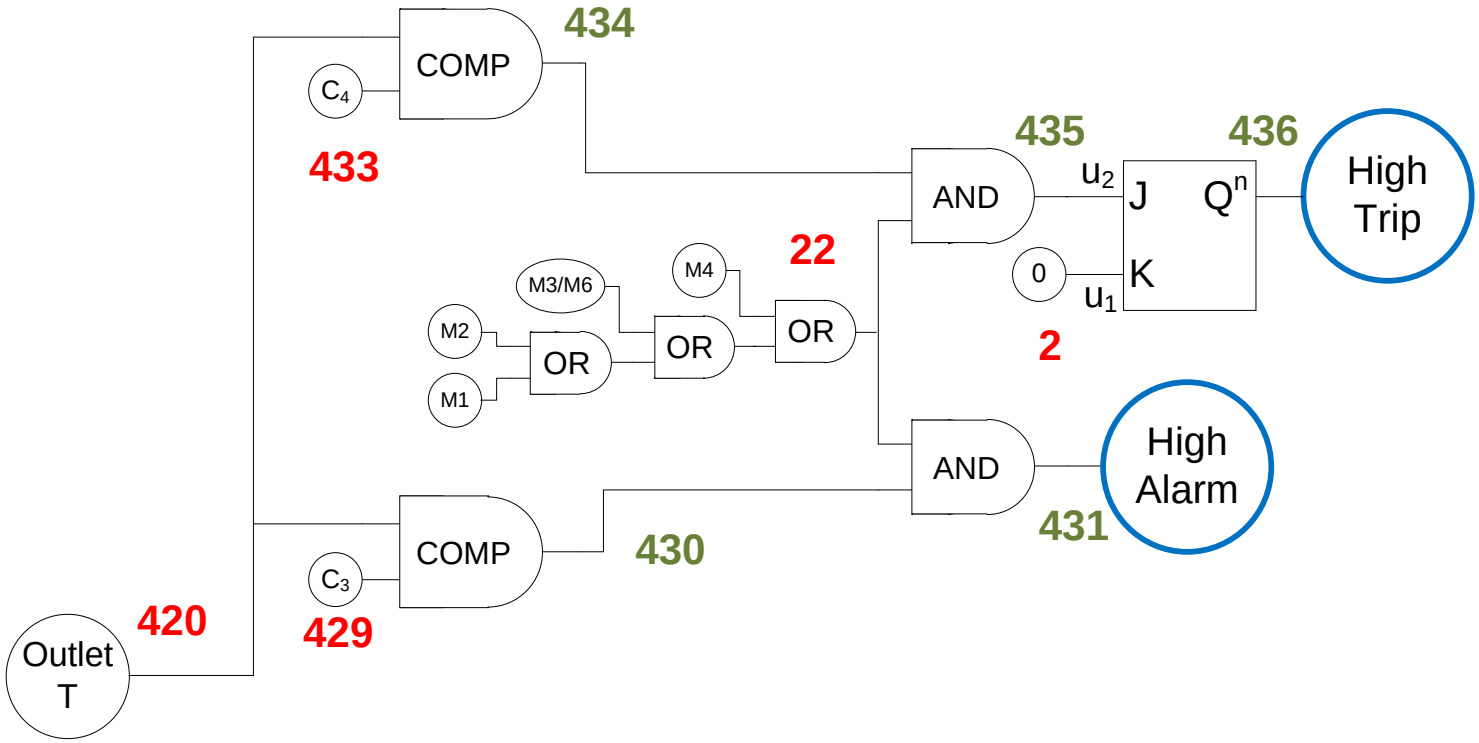

Inputs:
M1, M2, M3, M4: Variables to determine which mode
Equal to 1 if in that mode
Otherwise equal to 0.
C4 = High Trip Level
C3 = High Alarm Level
Outlet T = Outlet Temperature

Outputs:
High Alarm: High alarm signal (1 = On, 0 = Off)
High Trip: High trip signal (1 = On, 0 = Off)

Figure 34. Secondary SCA Outlet Temperature Logic

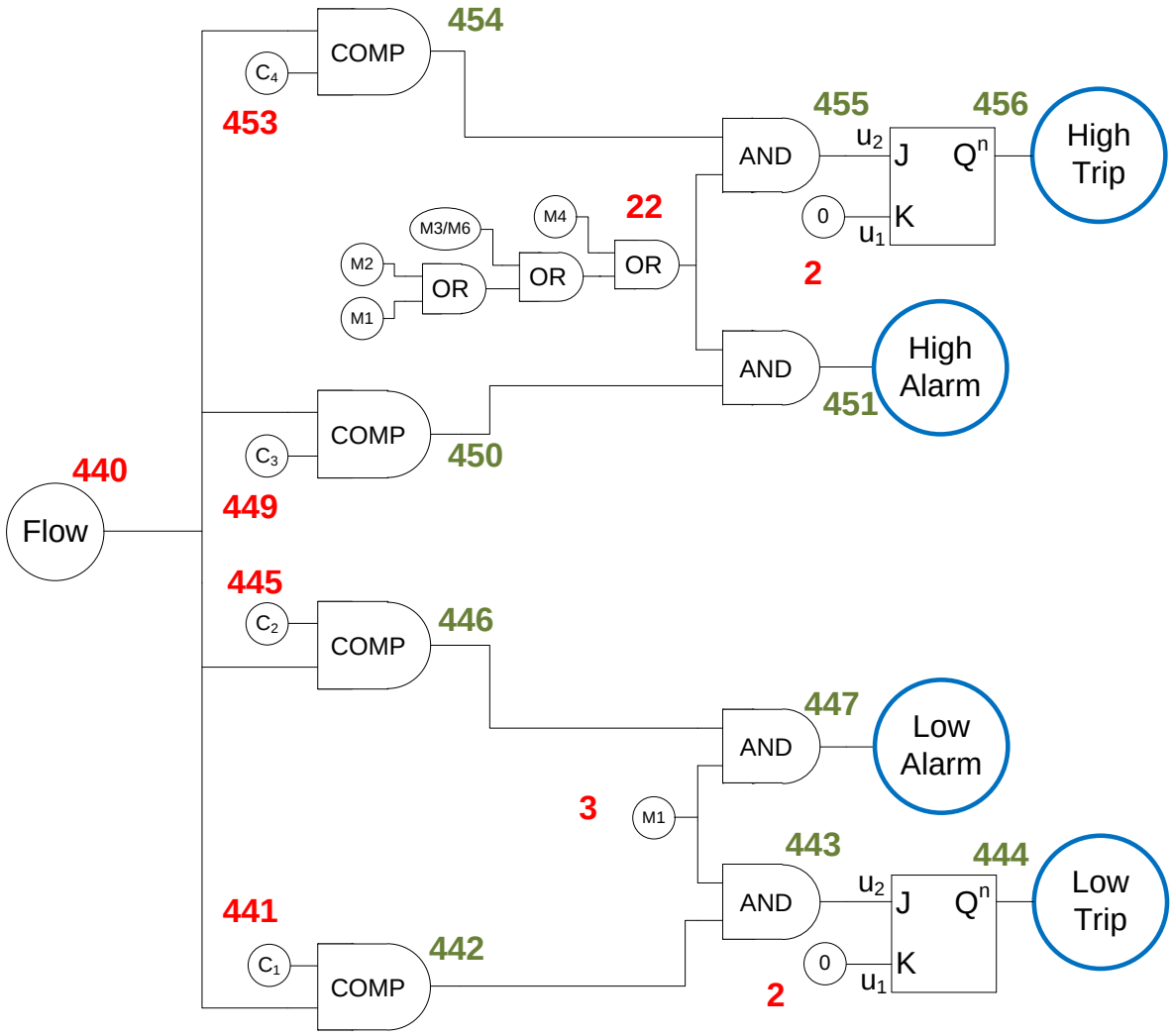

Inputs:
M1, M2, M3, M4: Variables to determine which mode
Equal to 1 if in that mode
Otherwise equal to 0.
C4 = High Trip Level
C3 = High Alarm Level
C2 = Low Alarm Level
C1 = Low Trip Level
Flow = Secondary SCA Flow Measurement

Outputs:
High Alarm: High alarm signal (1 = On, 0 = Off)
Low Alarm: Low alarm signal (1 = On, 0 = Off)
High Trip: High trip signal (1 = On, 0 = Off)
Low Trip: Low trip signal (1 = On, 0 = Off)

Figure 35. Secondary SCA Flow Logic

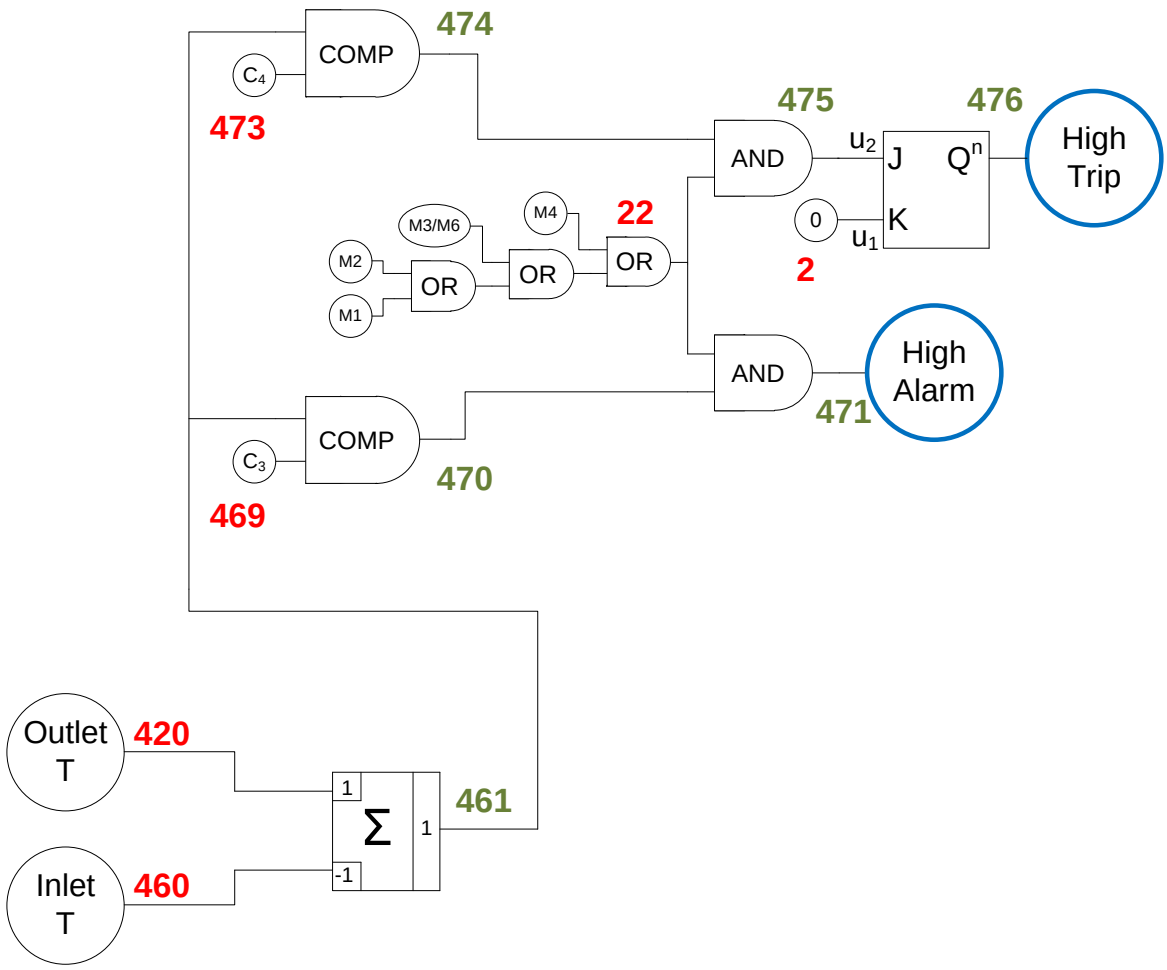

Inputs:
M1, M2, M3, M4: Variables to determine which mode
Equal to 1 if in that mode
Otherwise equal to 0.
C4 = High Trip Level
C3 = High Alarm Level
Outlet T = Outlet Temperature
Inlet T = Inlet Temperature

Outputs:
High Alarm: High alarm signal (1 = On, 0 = Off)
High Trip: High trip signal (1 = On, 0 = Off)

Figure 36. Secondary SCA ΔT Logic

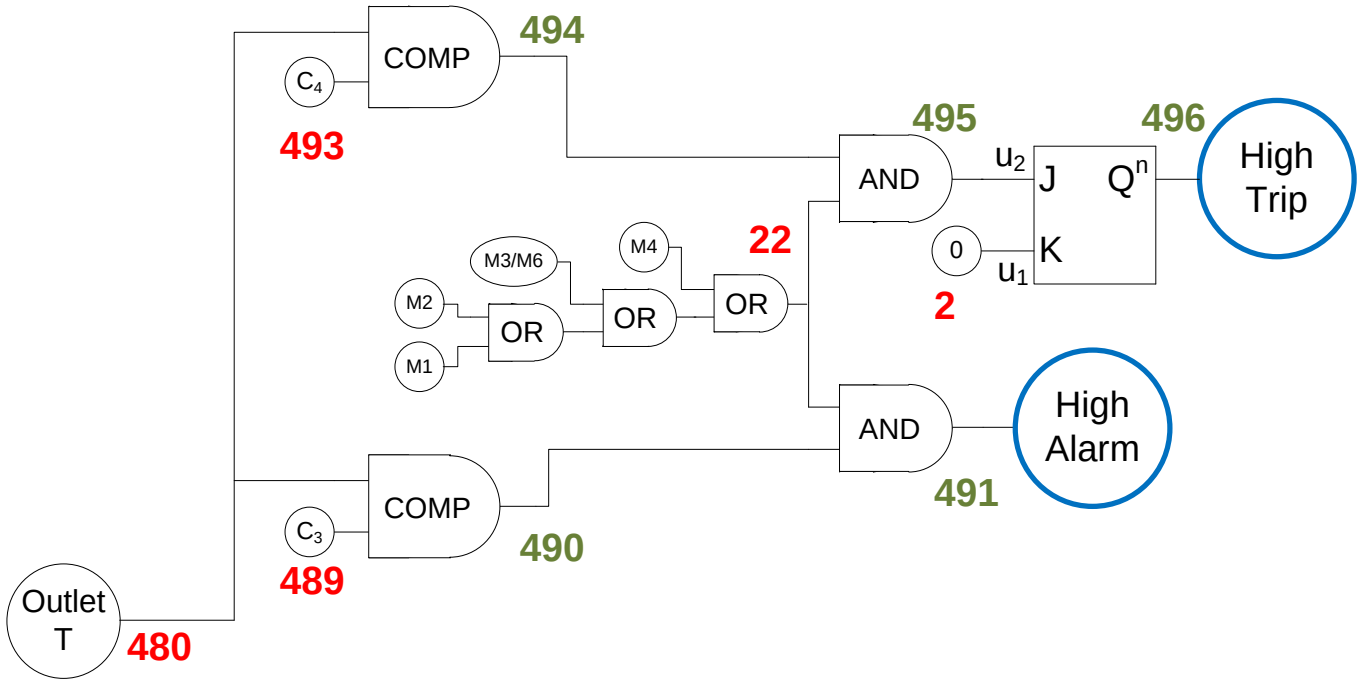

Inputs:
M1, M2, M3, M4: Variables to determine which mode
Equal to 1 if in that mode
Otherwise equal to 0.
C4 = High Trip Level
C3 = High Alarm Level
Outlet T = Outlet Temperature

Outputs:
High Alarm: High alarm signal (1 = On, 0 = Off)
High Trip: High trip signal (1 = On, 0 = Off)

Figure 37. Secondary Target Outlet Temperature Logic

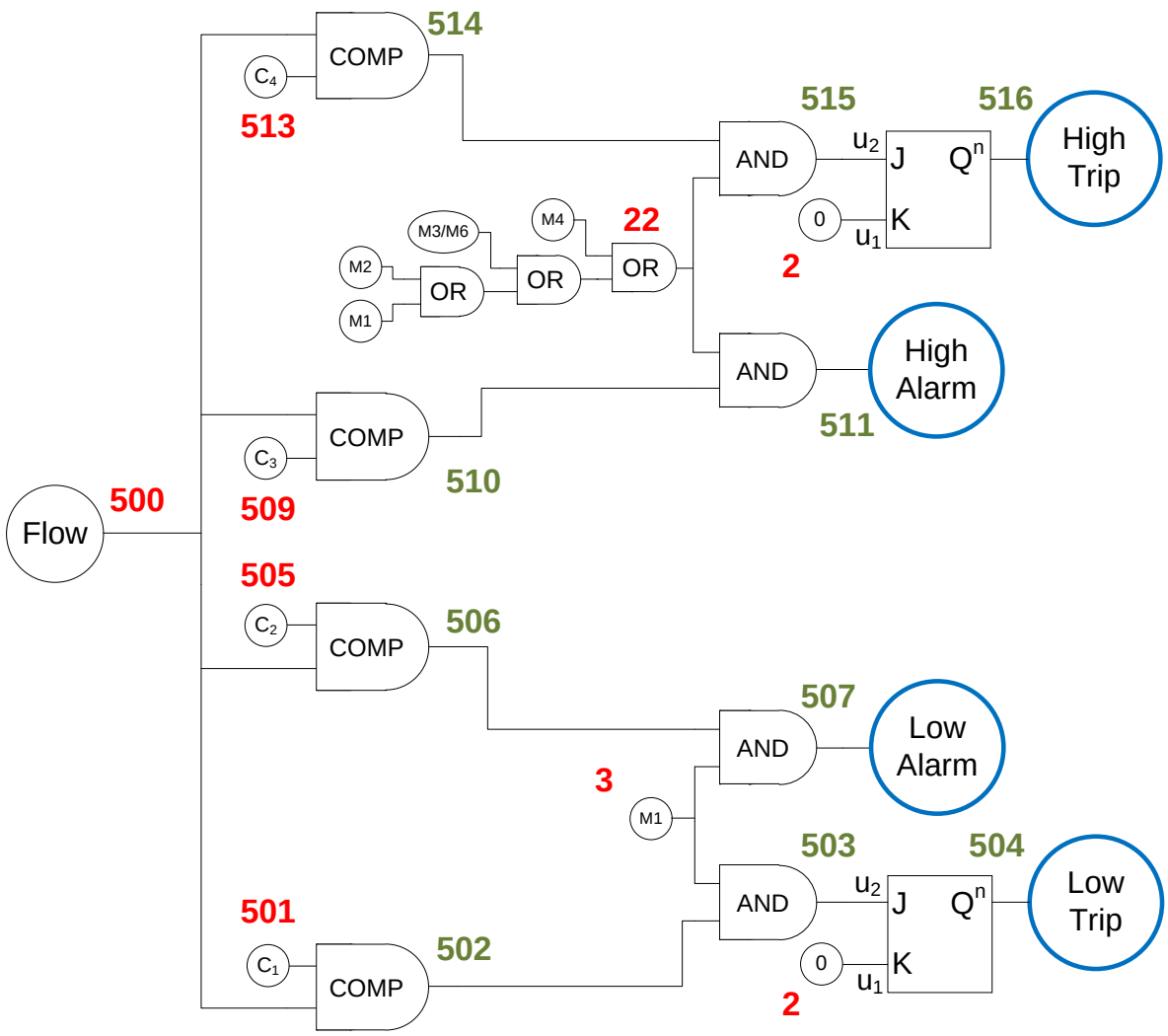

Inputs:
M1, M2, M3, M4: Variables to determine which mode
Equal to 1 if in that mode
Otherwise equal to 0.
C4 = High Trip Level
C3 = High Alarm Level
C2 = Low Alarm Level
C1 = Low Trip Level
Flow = Secondary Target Flow Measurement

Outputs:
High Alarm: High alarm signal (1 = On, 0 = Off)
Low Alarm: Low alarm signal (1 = On, 0 = Off)
High Trip: High trip signal (1 = On, 0 = Off)
Low Trip: Low trip signal (1 = On, 0 = Off)

Figure 38. Secondary Target Flow Logic

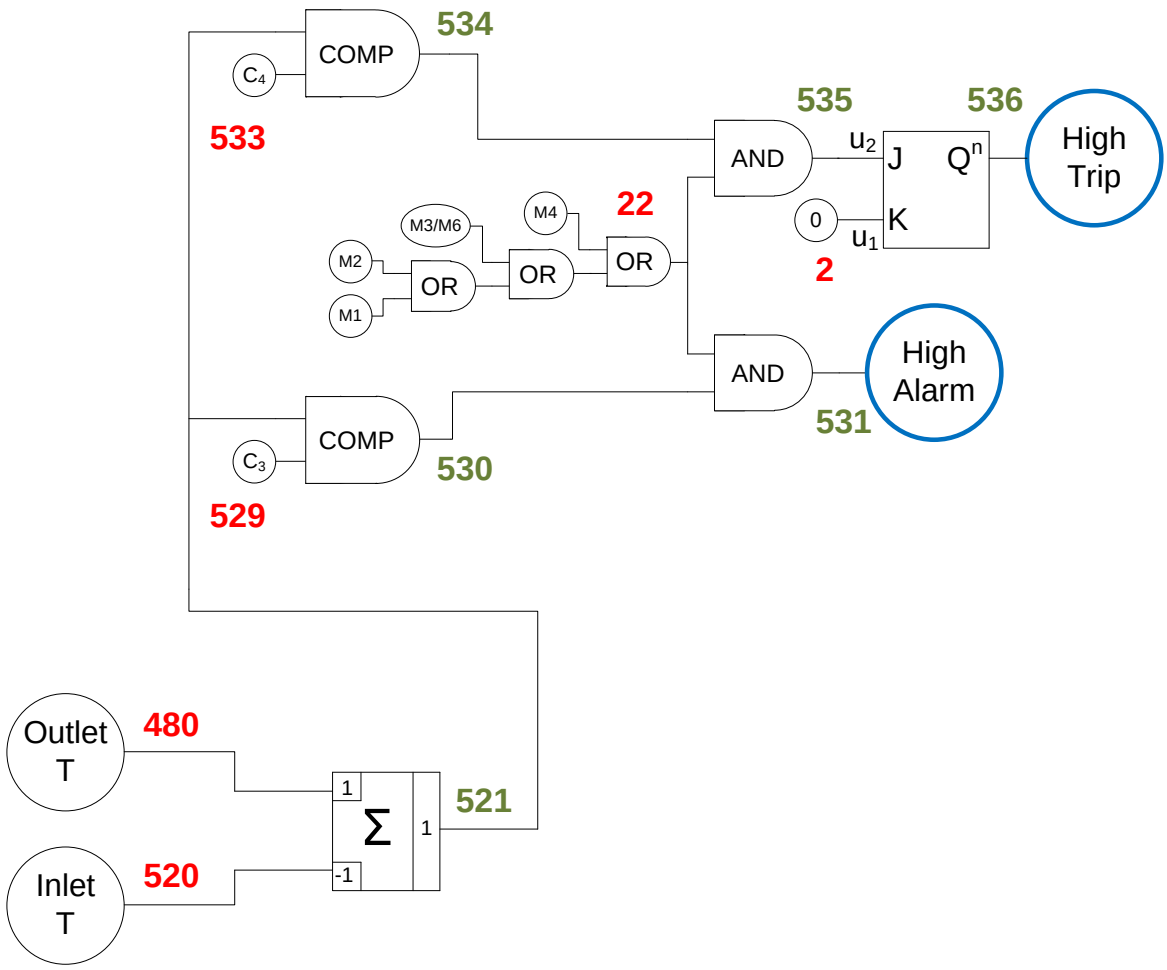

Inputs:
M1, M2, M3, M4: Variables to determine which mode
Equal to 1 if in that mode
Otherwise equal to 0.
C4 = High Trip Level
C3 = High Alarm Level
Outlet T = Outlet Temperature
Inlet T = Inlet Temperature

Outputs:
High Alarm: High alarm signal (1 = On, 0 = Off)
High Trip: High trip signal (1 = On, 0 = Off)

Figure 39. Secondary Target ΔT Logic

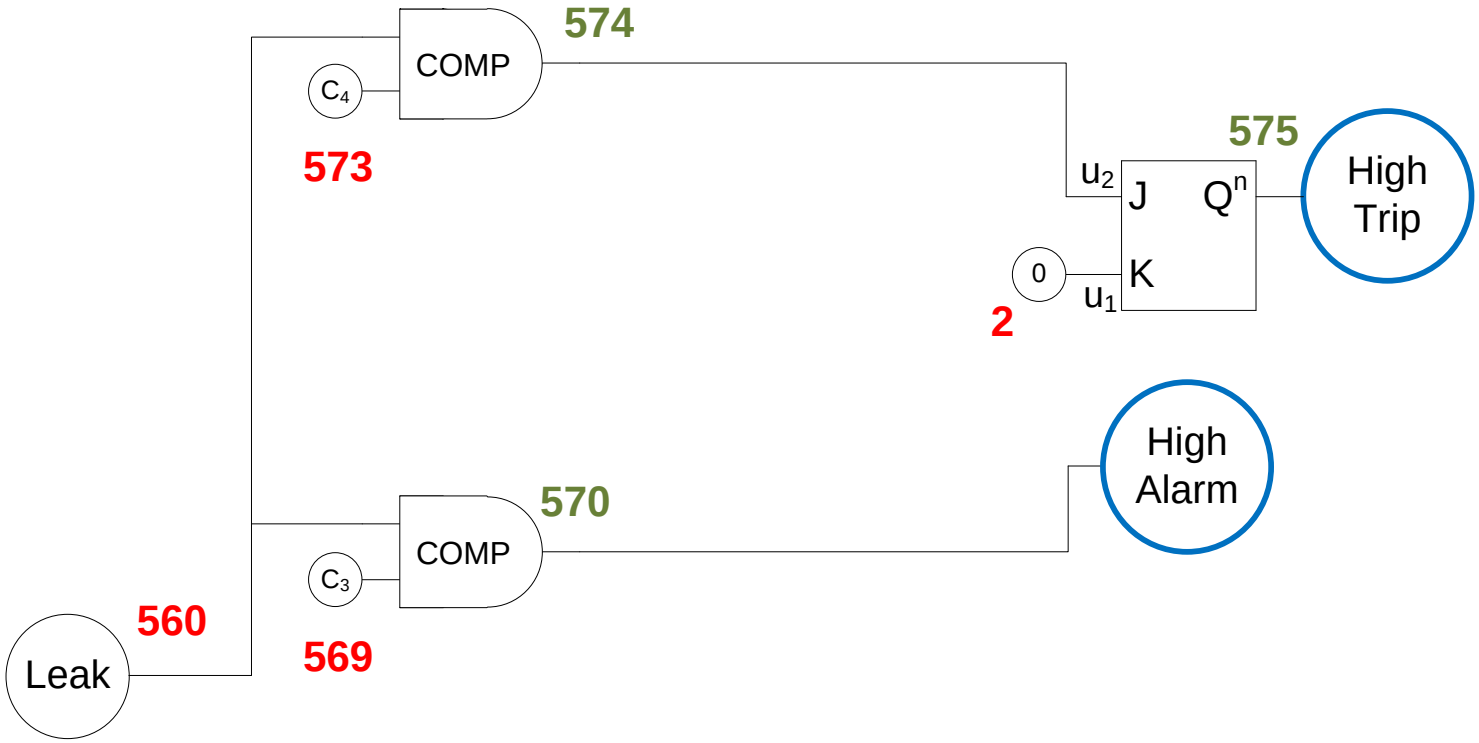

Inputs:
C4 = High Trip Level
C3 = High Alarm Level
Leak = Fuel Pool Leak Measurement

Outputs:
High Alarm: High alarm signal (1 = On, 0 = Off)
High Trip: High trip signal (1 = On, 0 = Off)

Figure 40. Fuel Pool Leak Logic

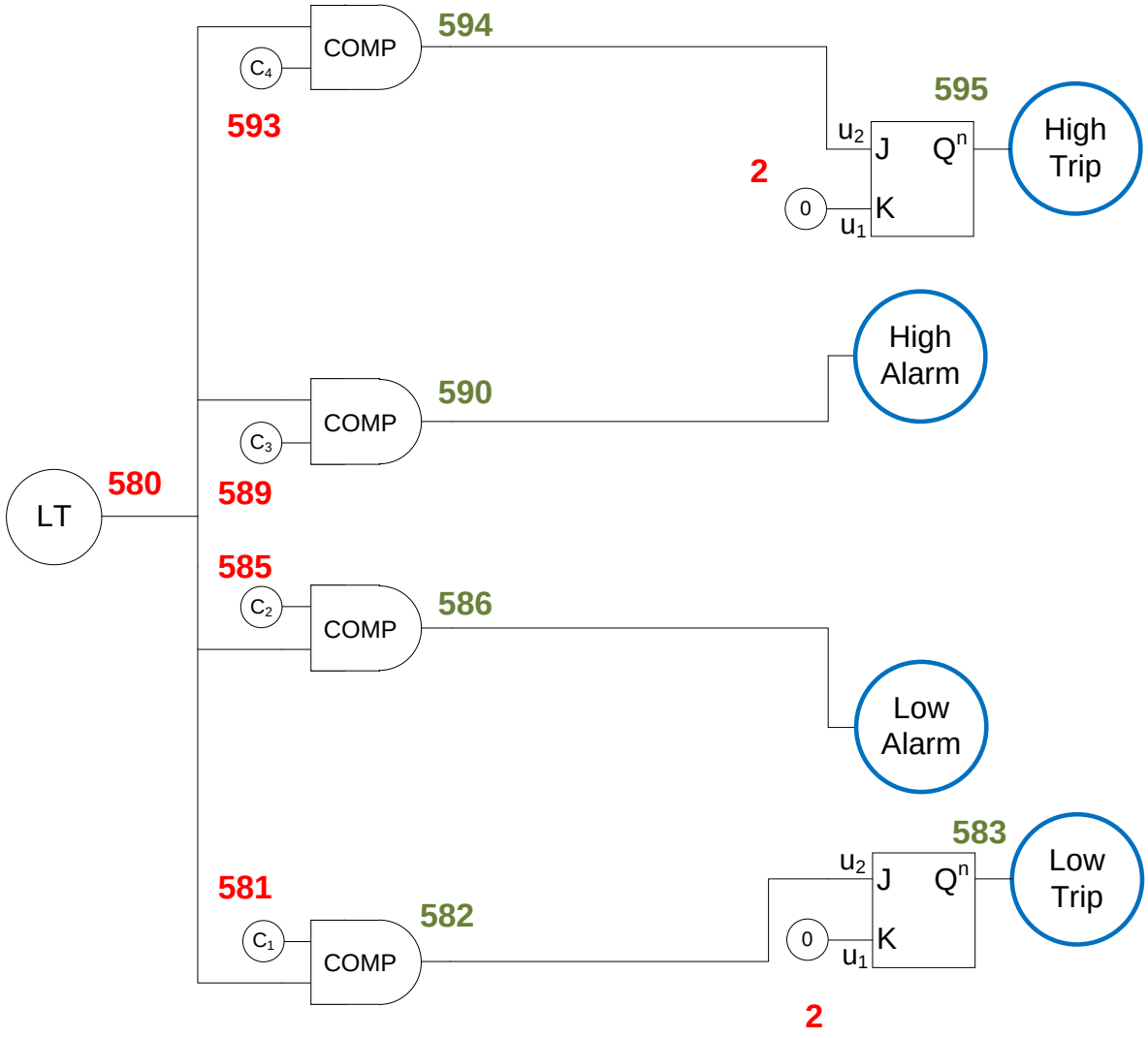

Inputs:
LT = Fuel Pool Level
C4 = High Trip Level
C3 = High Alarm Level
C2 = Low Alarm Level
C1 = Low Trip Level

Outputs:
High Alarm: High alarm signal (1 = On, 0 = Off)
Low Alarm: Low alarm signal (1 = On, 0 = Off)
High Trip: High trip signal (1 = On, 0 = Off)
Low Trip: Low trip signal (1 = On, 0 = Off)

Figure 41. Fuel Pool Level Logic

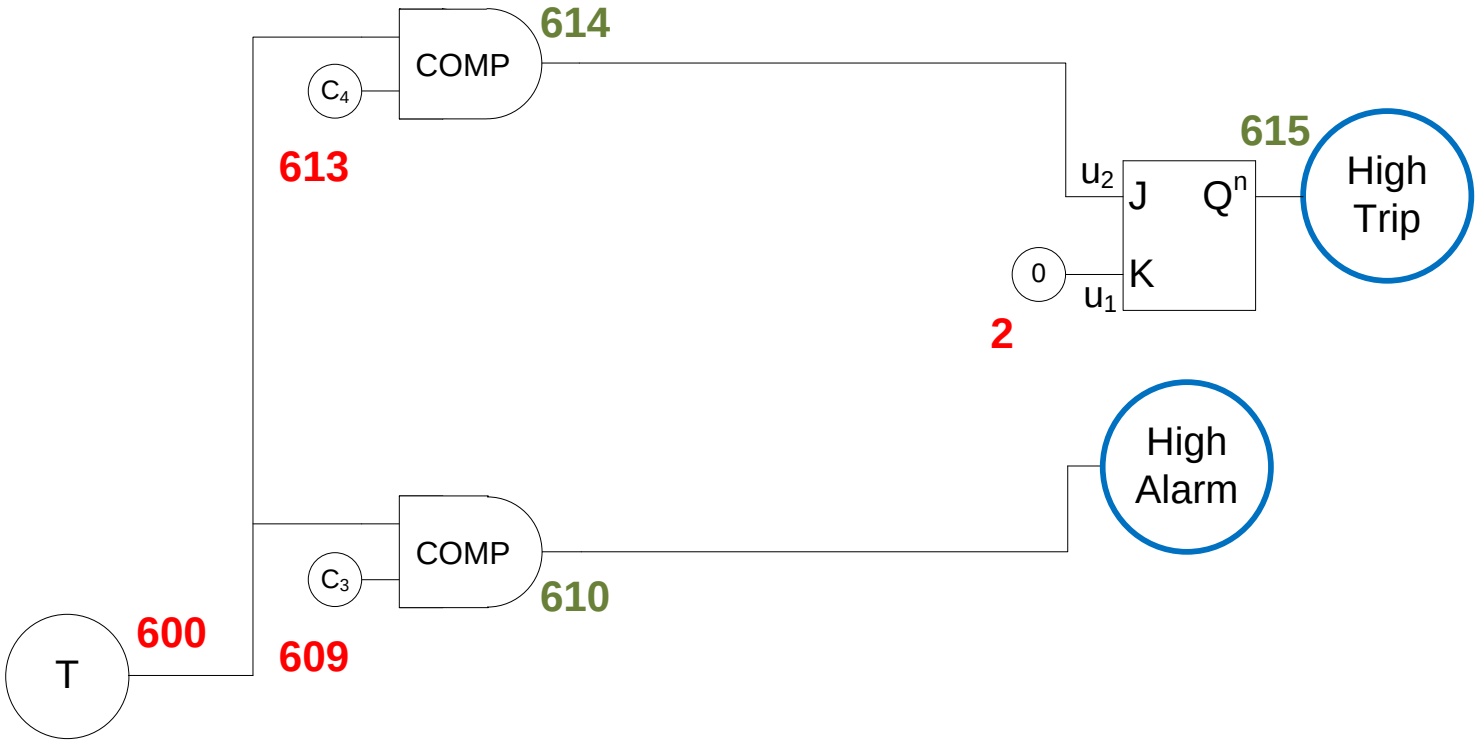

Inputs:
C4 = High Trip Level
C3 = High Alarm Level
T = Fuel Pool Temperature

Outputs:
High Alarm: High alarm signal (1 = On, 0 = Off)
High Trip: High trip signal (1 = On, 0 = Off)

Figure 42. Fuel Pool Temperature Logic

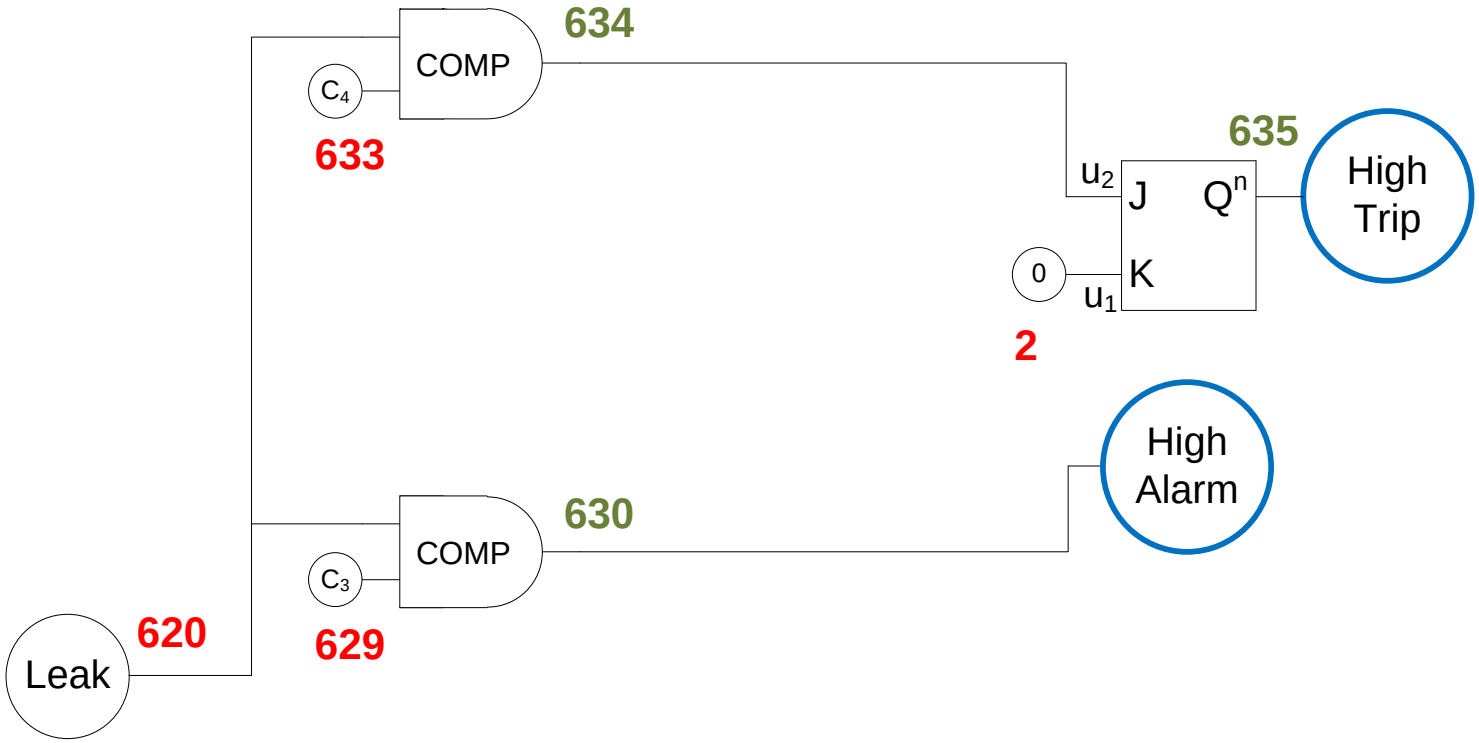

Inputs:
C4 = High Trip Level
C3 = High Alarm Level
Leak = Radiation Waste Tank Leak Measurement

Outputs:
High Alarm: High alarm signal (1 = On, 0 = Off)
High Trip: High trip signal (1 = On, 0 = Off)

Figure 43. Radiation Waste Tank Leak Logic

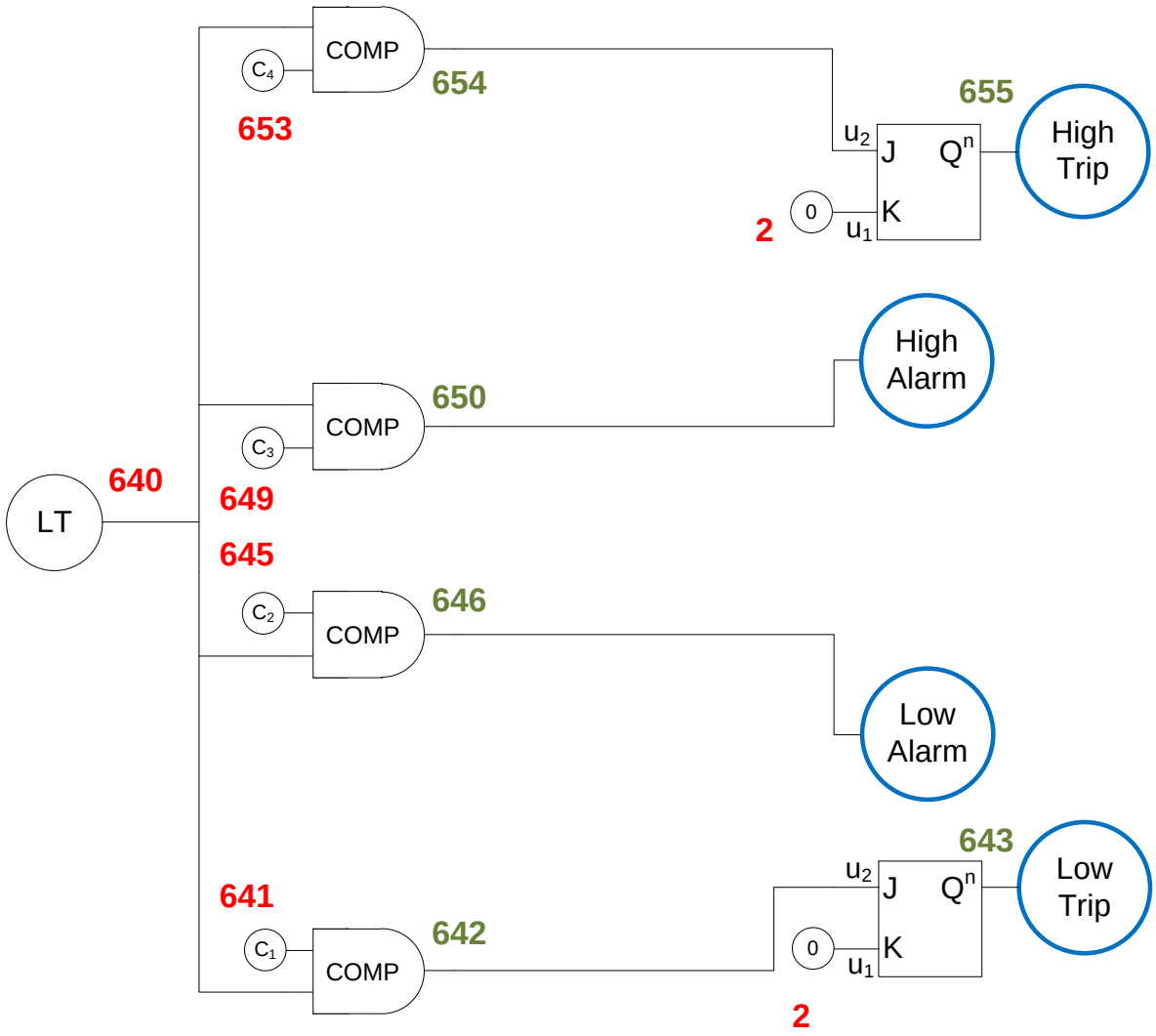

Inputs:
LT = Fuel Pool Level
C4 = High Trip Level
C3 = High Alarm Level
C2 = Low Alarm Level
C1 = Low Trip Level

Outputs:
High Alarm: High alarm signal (1 = On, 0 = Off)
Low Alarm: Low alarm signal (1 = On, 0 = Off)
High Trip: High trip signal (1 = On, 0 = Off)
Low Trip: Low trip signal (1 = On, 0 = Off)

Figure 44. Radiation Waste Tank Level Logic

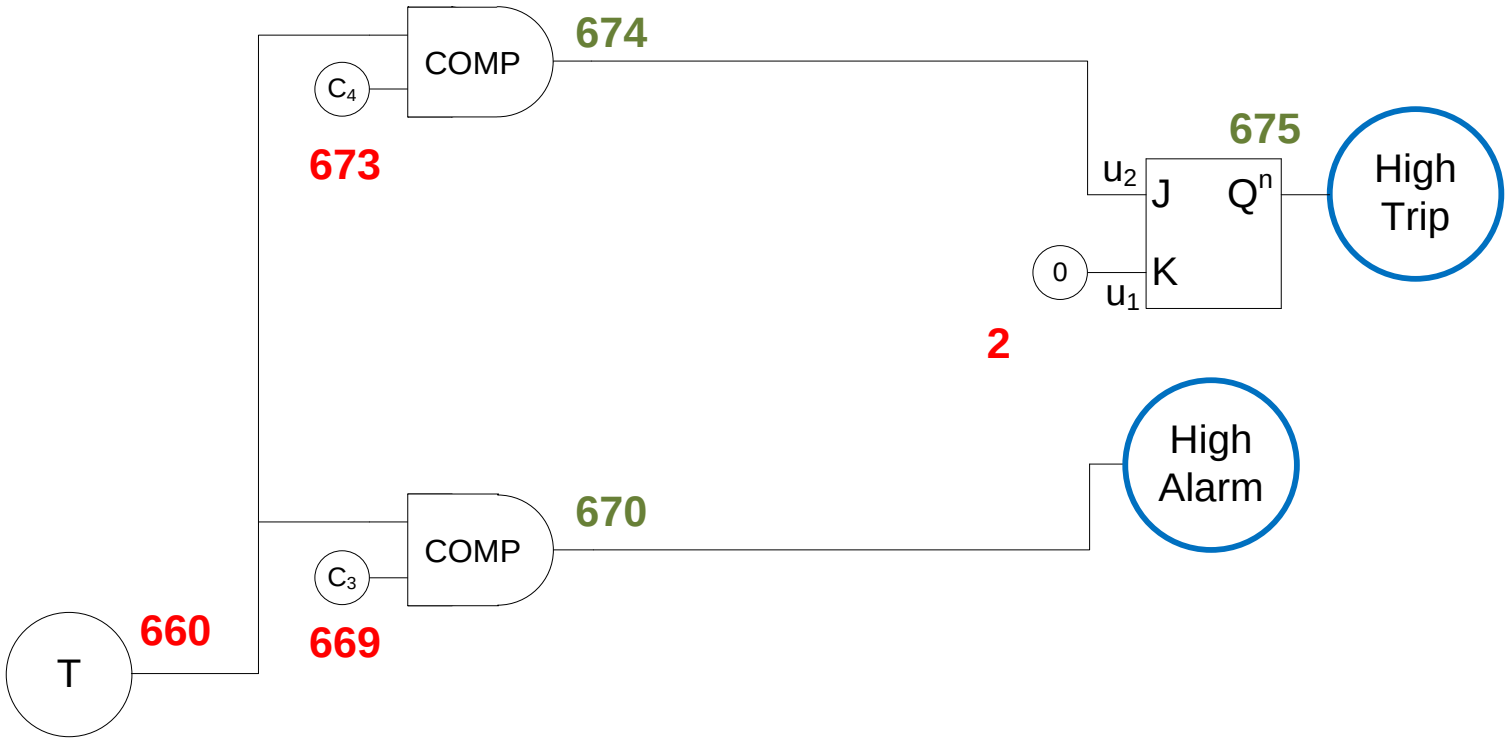

Inputs:
C4 = High Trip Level
C3 = High Alarm Level
T = Radiation Waste Tank Temperature

Outputs:
High Alarm: High alarm signal (1 = On, 0 = Off)
High Trip: High trip signal (1 = On, 0 = Off)

Figure 45. Radiation Waste Tank Temperature Logic

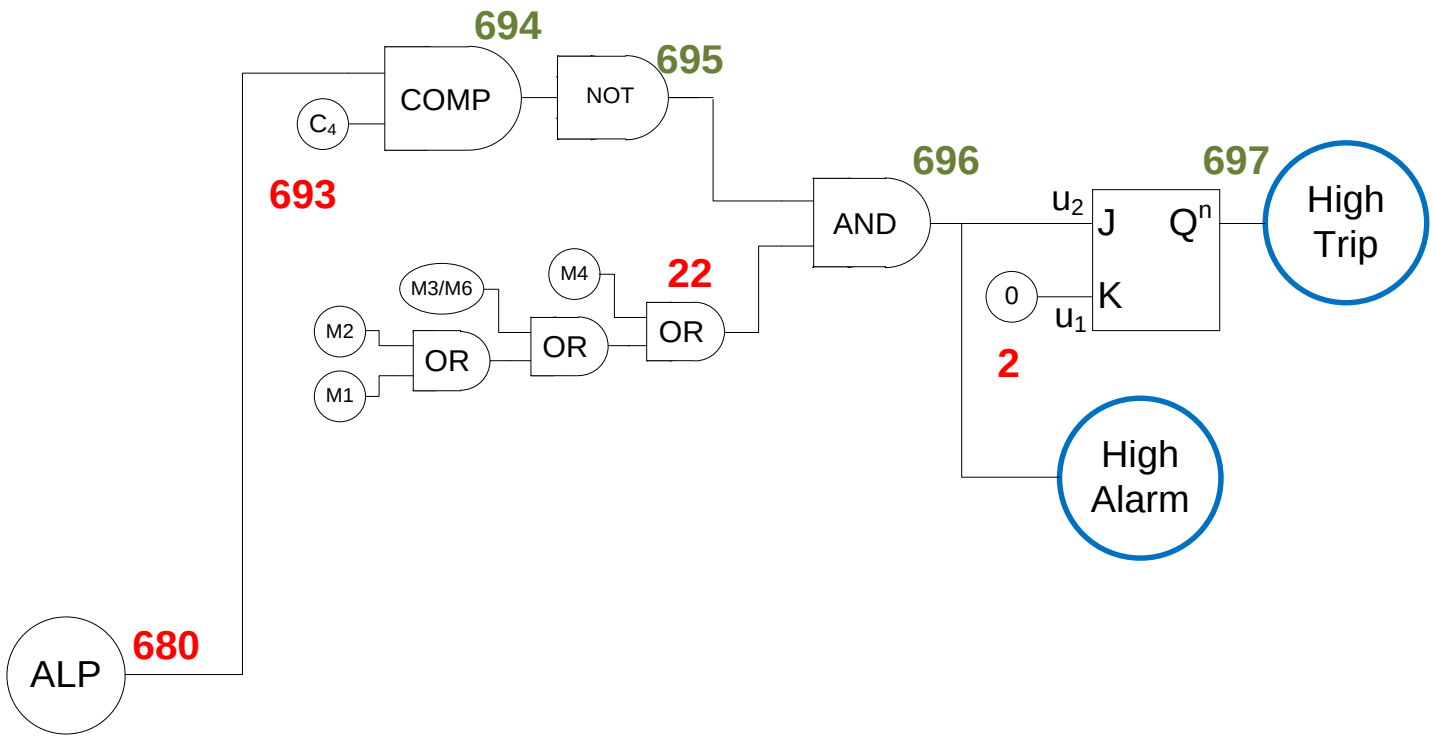

Inputs:
ALP = Air Lock Position (High position is closed)
M1, M2, M3, M4: Variables to determine which mode
Equal to 1 if in that mode
Otherwise equal to 0.
C4 = Fully closed air lock position

Outputs:
High Alarm: High alarm signal (1 = On, 0 = Off)
High Trip: High trip signal (1 = On, 0 = Off)

Figure 46. Air Lock Position Logic

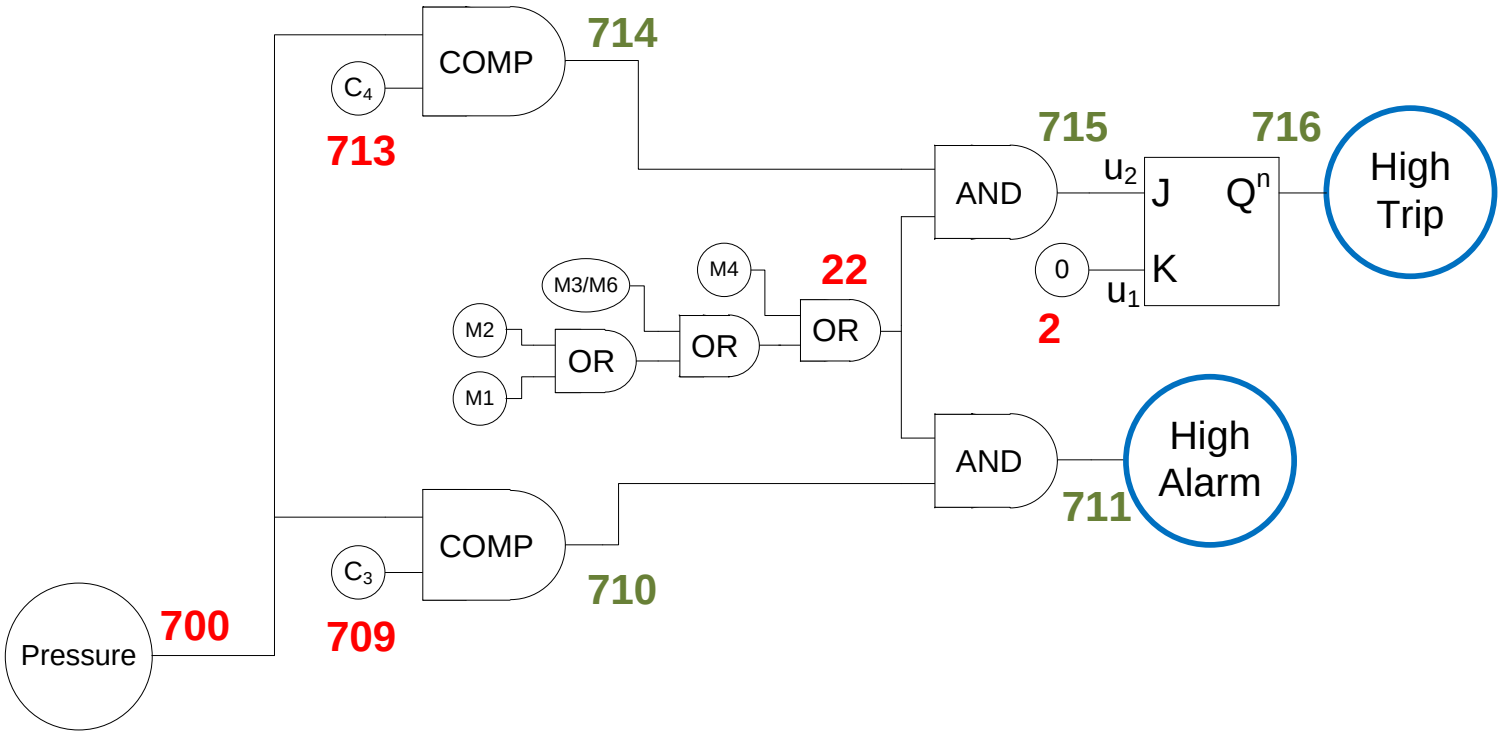

Inputs:
M1, M2, M3, M4: Variables to determine which mode
Equal to 1 if in that mode
Otherwise equal to 0.
C4 = High Trip Level
C3 = High Alarm Level
Pressure = Confinement Air Pressure

Outputs:
High Alarm: High alarm signal (1 = On, 0 = Off)
High Trip: High trip signal (1 = On, 0 = Off)

Figure 47. Confinement Air Pressure Logic

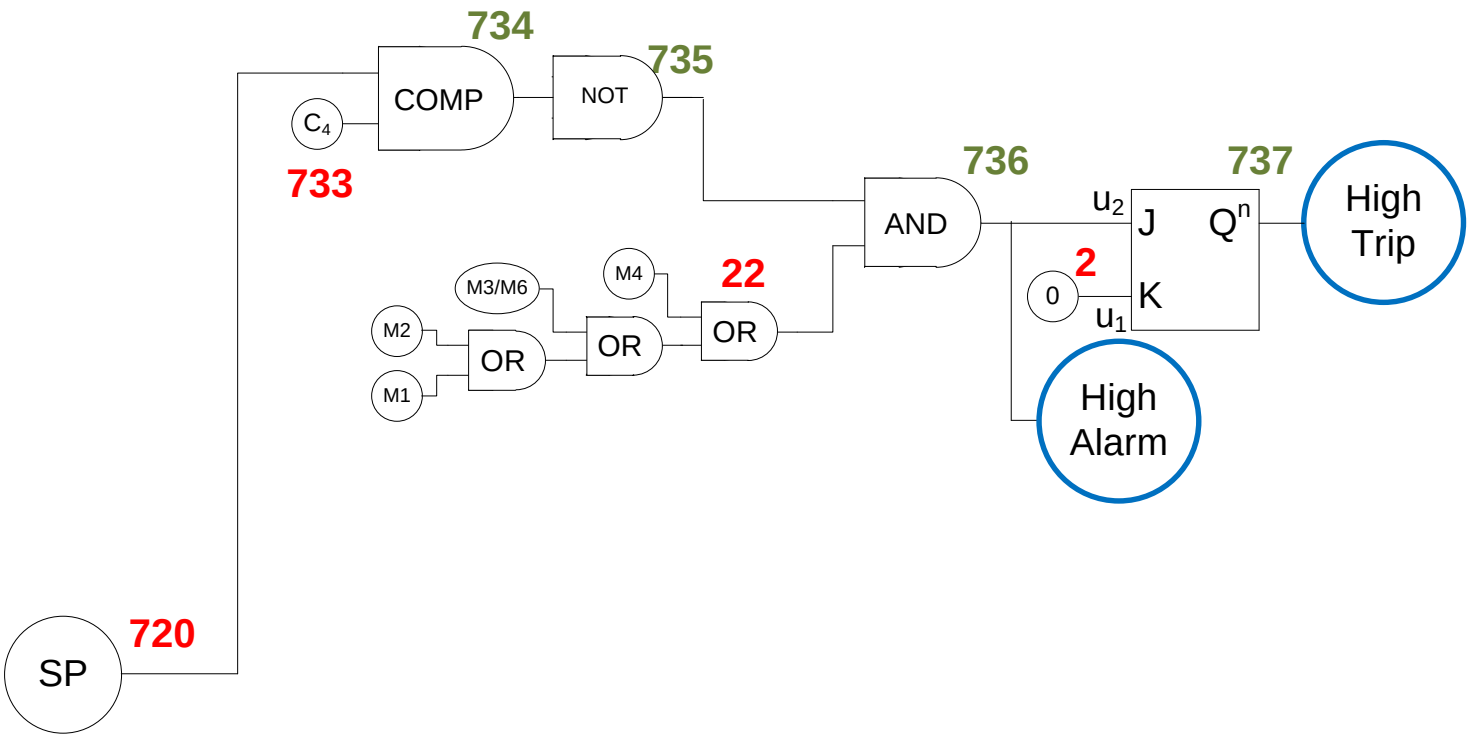

Inputs:
SP = Shield Position (High position is closed)
M1, M2, M3, M4: Variables to determine which mode
Equal to 1 if in that mode
Otherwise equal to 0.
C4 = Fully closed shield position

Outputs:
High Alarm: High alarm signal (1 = On, 0 = Off)
High Trip: High trip signal (1 = On, 0 = Off)

Figure 48. Top Shield Position Logic

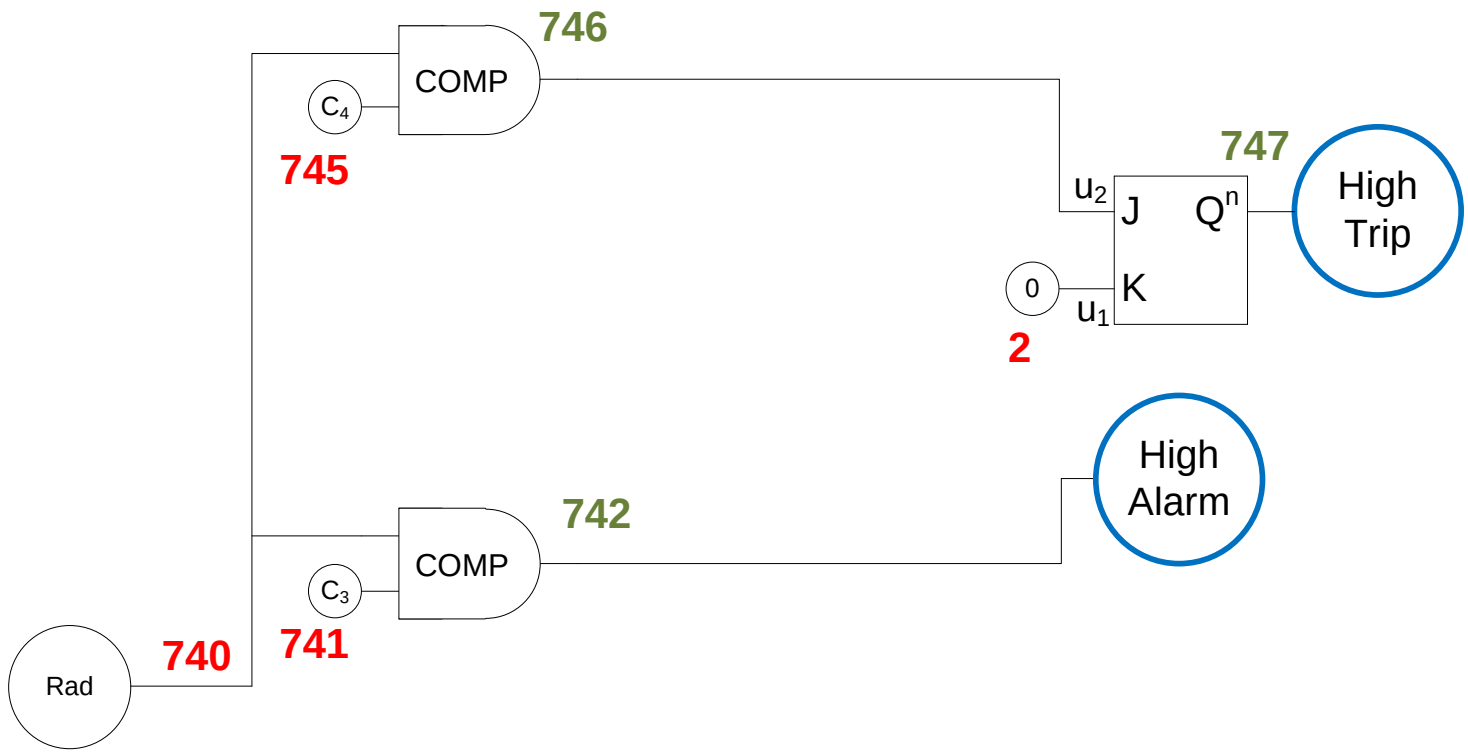

Inputs:
Rad: Air Radiation Level
C4 = High Trip Level
C3 = High Alarm Level

Outputs:
High Alarm: High alarm signal (1 = On, 0 = Off)
High Trip: High trip signal (1 = On, 0 = Off)

Figure 49. Shield Air Radiation Logic

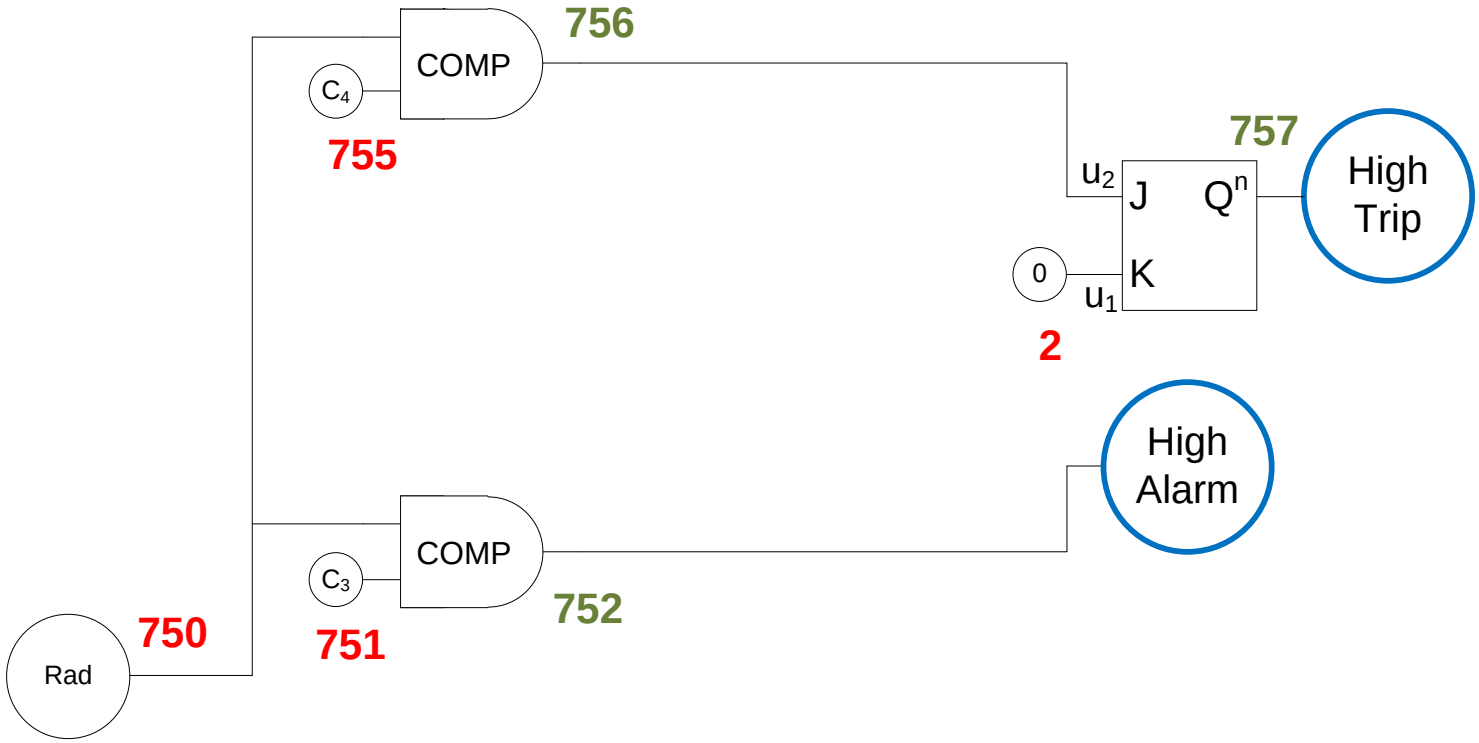

Inputs:
Rad: Building Radiation Level
C4 = High Trip Level
C3 = High Alarm Level

Outputs:
High Alarm: High alarm signal (1 = On, 0 = Off)
High Trip: High trip signal (1 = On, 0 = Off)

Figure 50. Building Radiation Logic

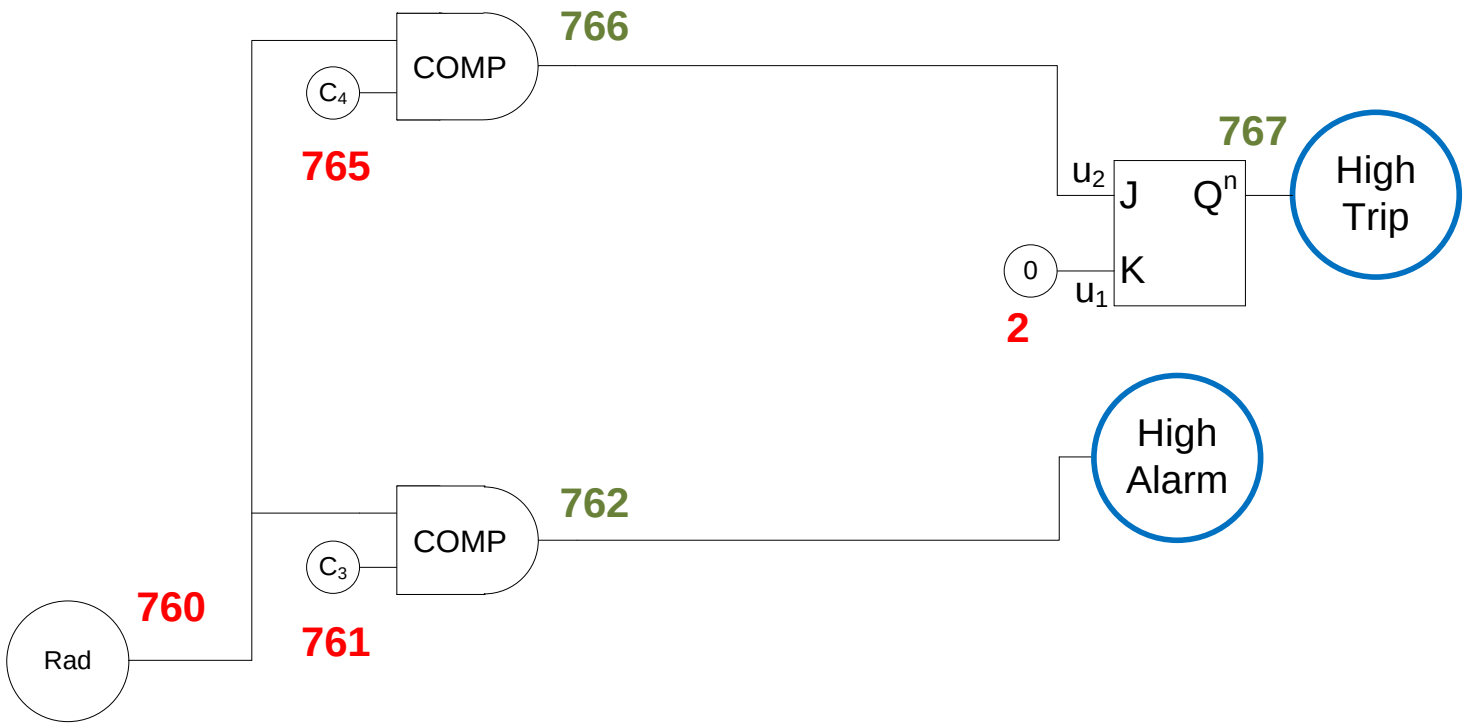

Inputs:
Rad: Cover Gas Radiation Level
C4 = High Trip Level
C3 = High Alarm Level

Outputs:
High Alarm: High alarm signal (1 = On, 0 = Off)
High Trip: High trip signal (1 = On, 0 = Off)

Figure 51. Surge Tank Cover Gas Radiation Logic

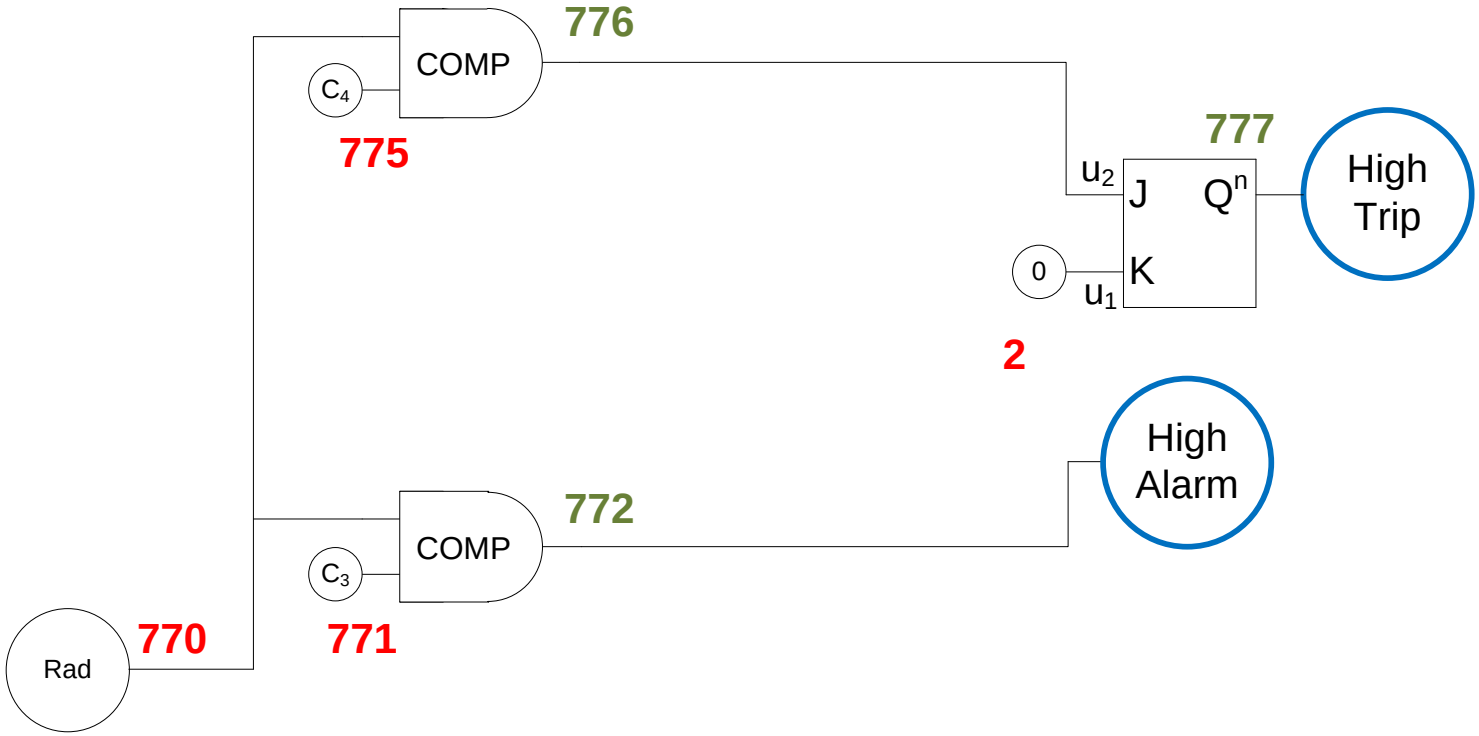

Inputs:
Rad: H_2O Radiation Level
C4 = High Trip Level
C3 = High Alarm Level

Outputs:
High Alarm: High alarm signal (1 = On, 0 = Off)
High Trip: High trip signal (1 = On, 0 = Off)

Figure 52. H_2O Radiation Logic

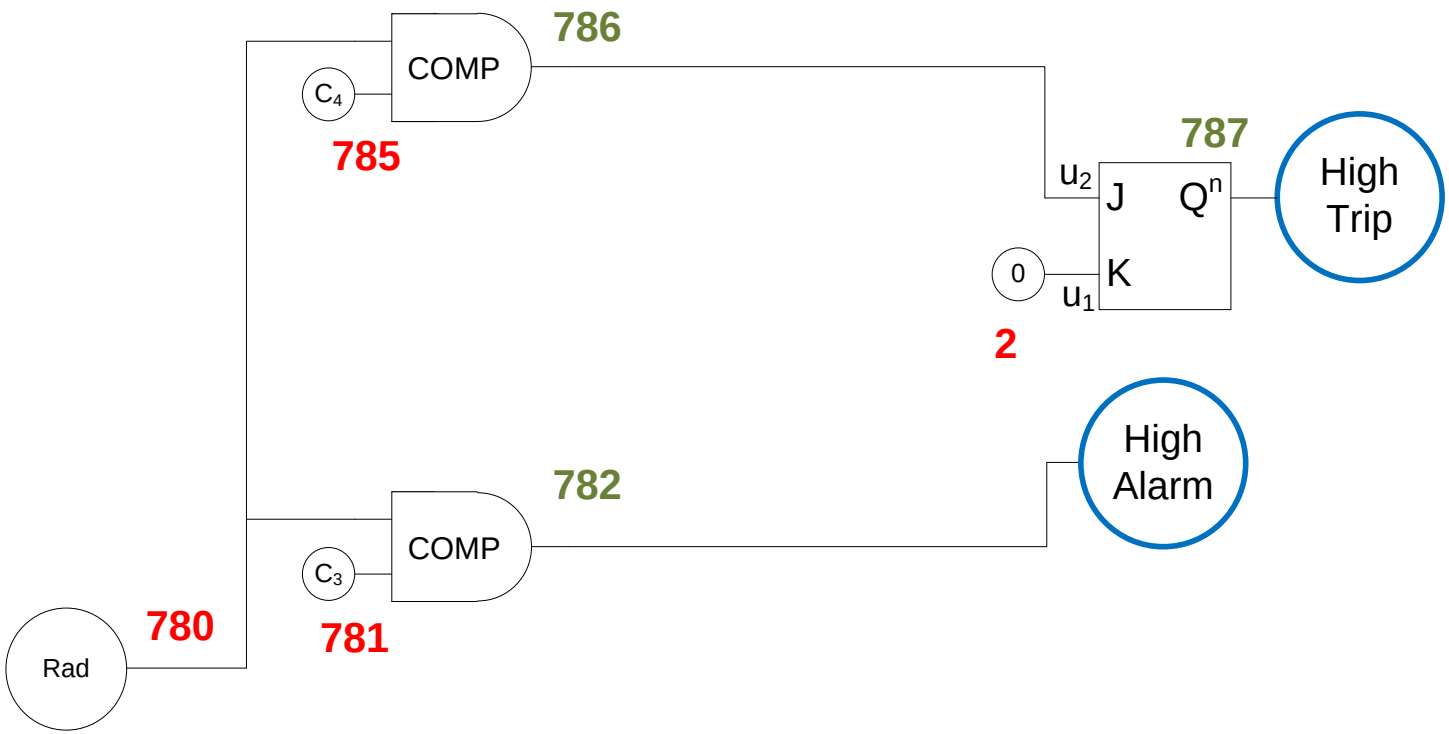

Inputs:
Rad: Stack Radiation Level
C4 = High Trip Level
C3 = High Alarm Level

Outputs:
High Alarm: High alarm signal (1 = On, 0 = Off)
High Trip: High trip signal (1 = On, 0 = Off)

Figure 53. Stack Radiation Logic

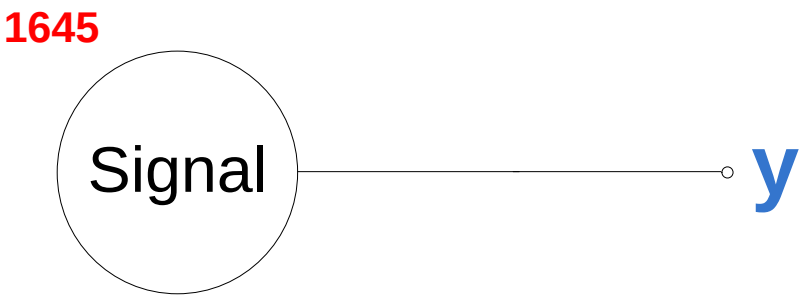

y: Output Signal

y = 1 → Trip the reactor

y = 0 → Do not trip the accelerator

Signal: Manual Trip Signal

1 = Trip the reactor

0 = Do not trip the accelerator

Figure 54. Manual Trip Logic

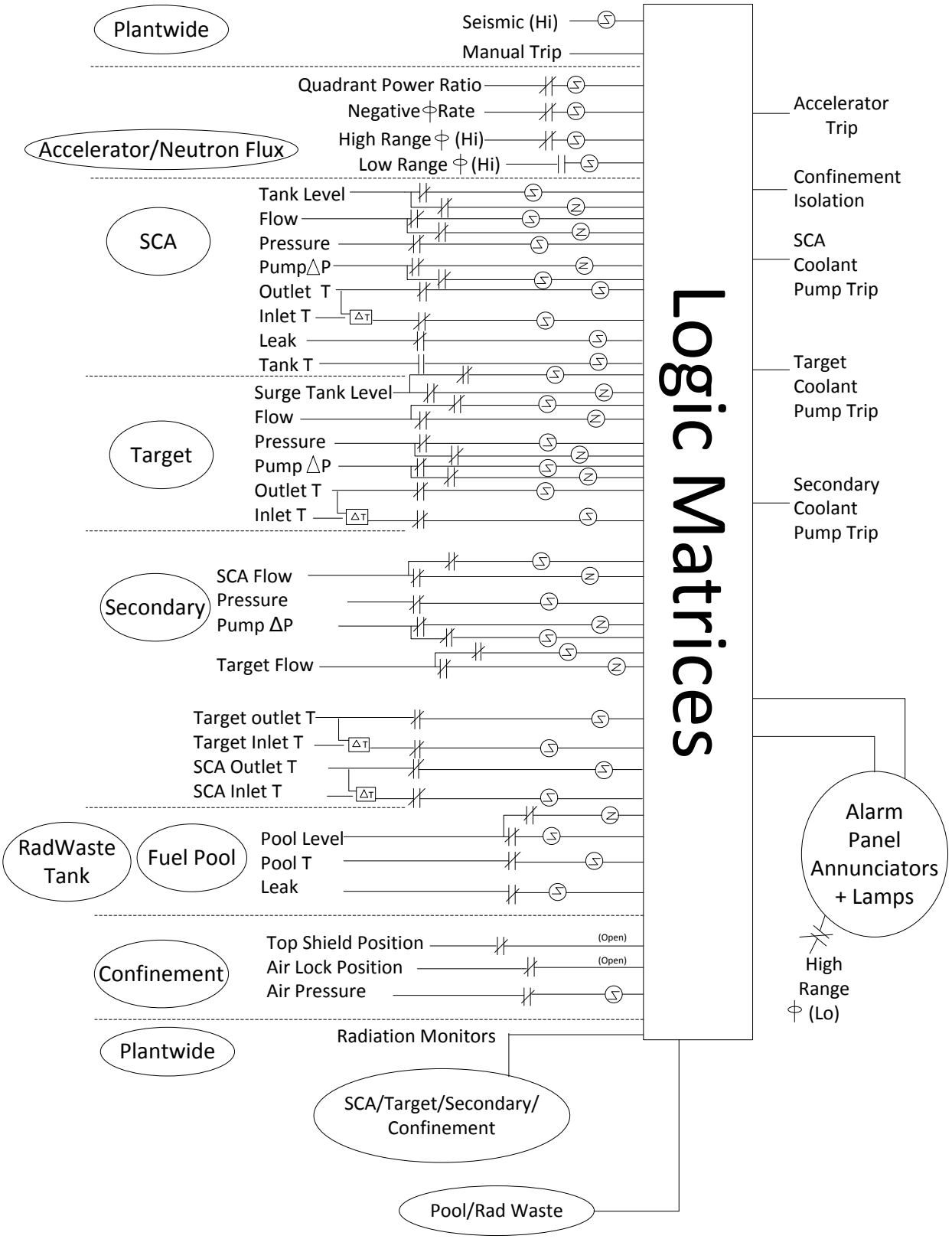

Figure 55. Operating Mode I PPS Block Diagram

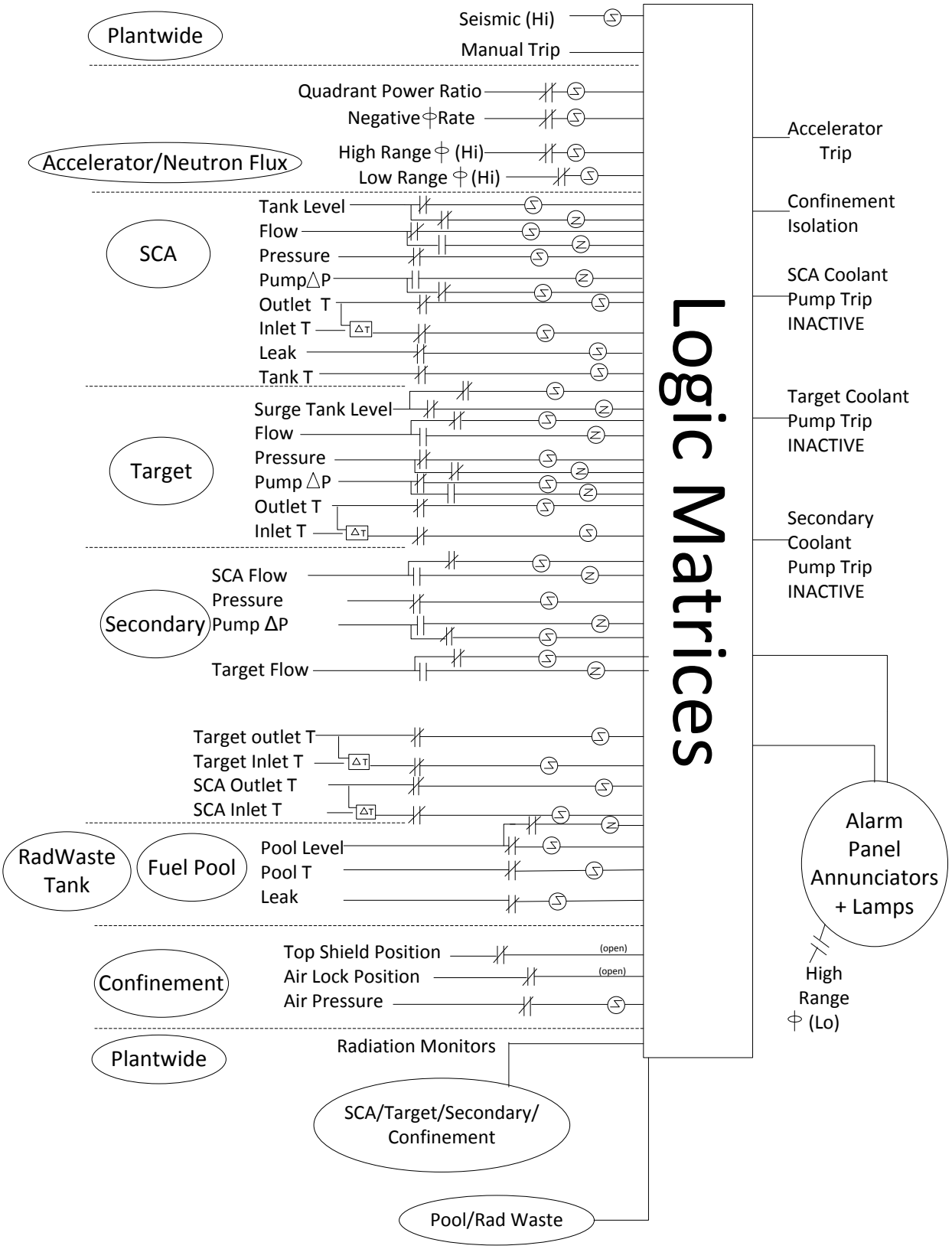

Figure 56. Testing/Calibration Mode II PPS Block Diagram

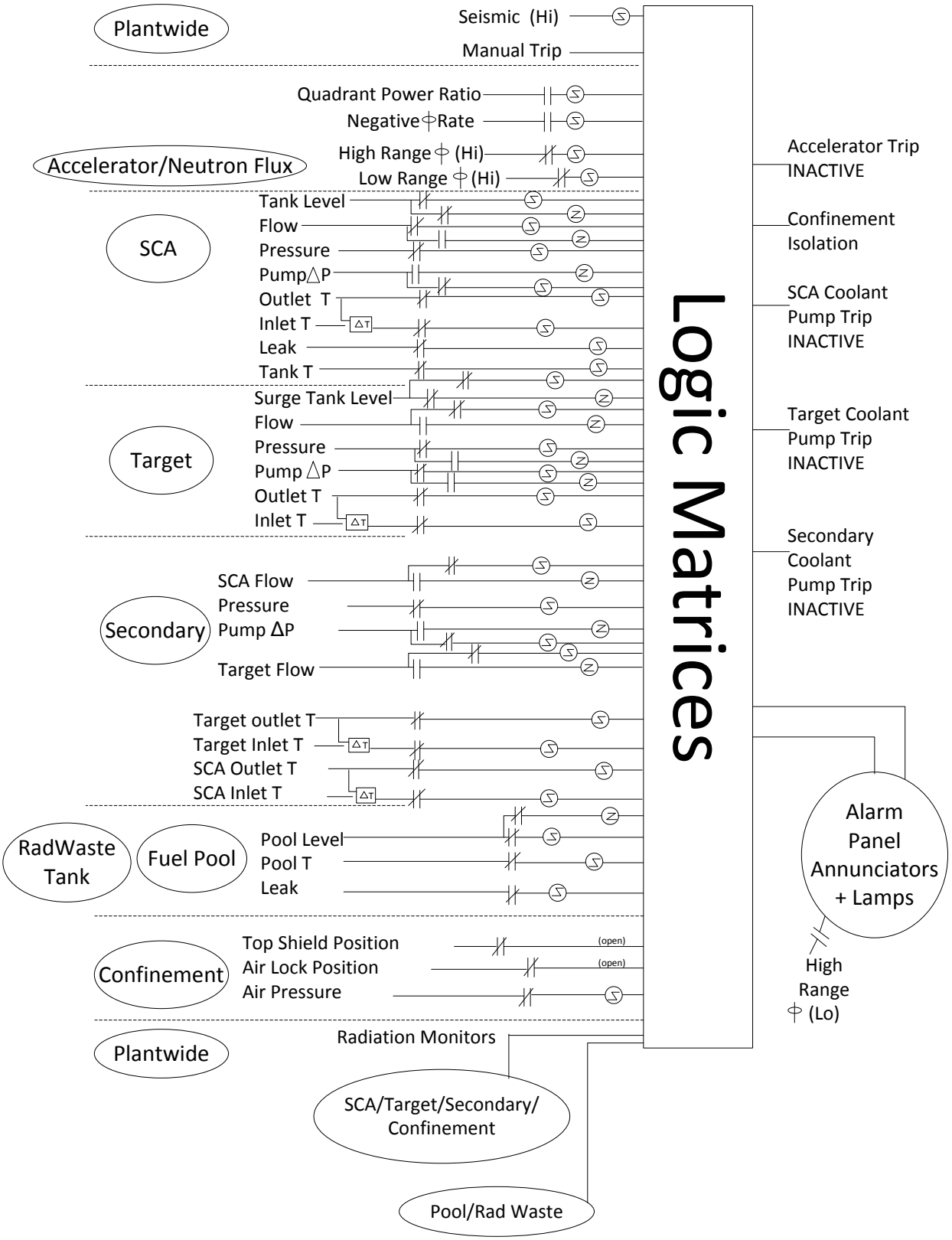

Figure 57. Shutdown Mode III/VI PPS Block Diagram

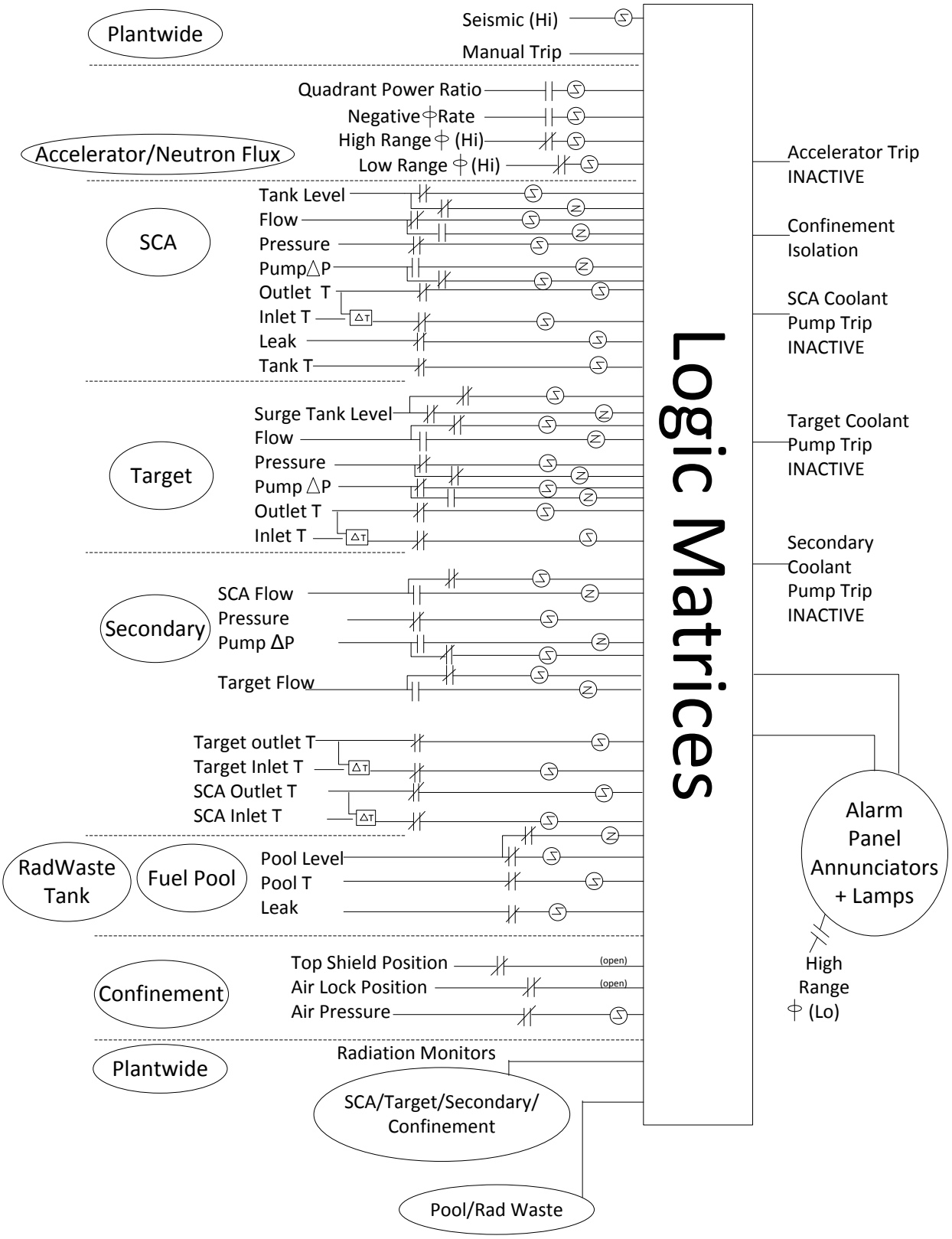

Figure 58. Loading/Unloading Mode IV PS Block Diagram

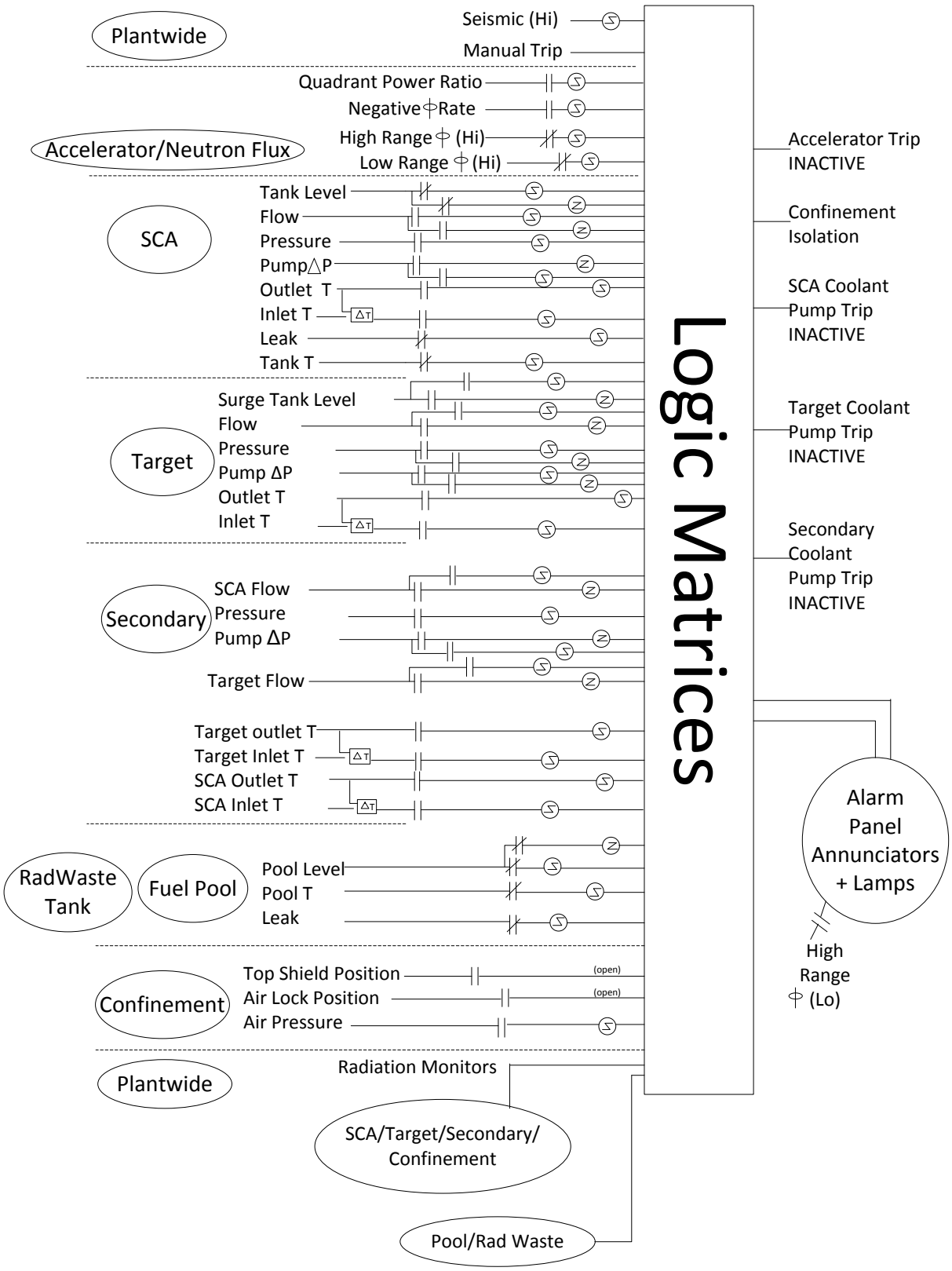

Figure 59. Plant Maintenance/Target Replacement Mode V PPS Block Diagram

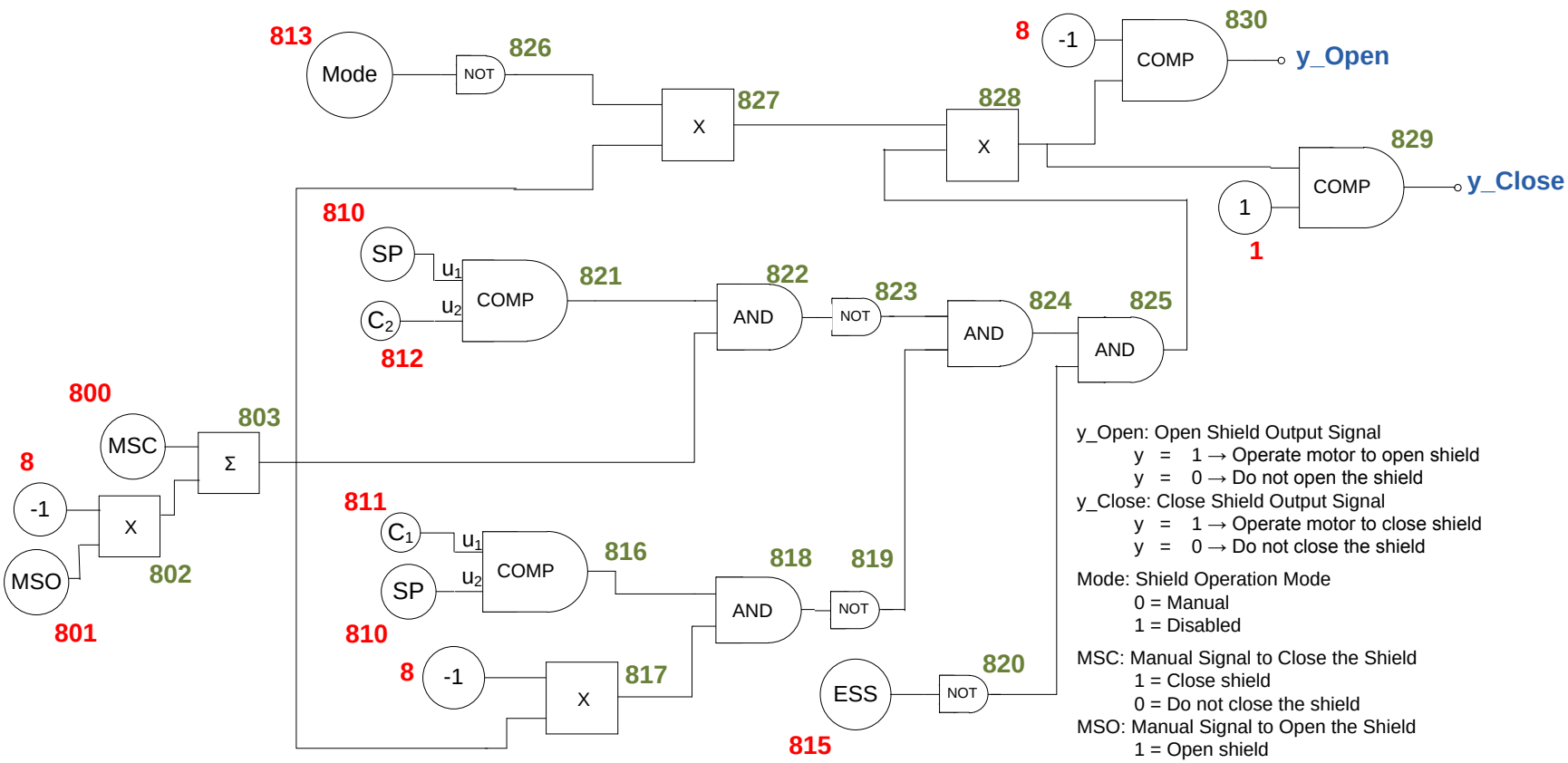

y_Open: Open Shield Output Signal
y = 1 → Operate motor to open shield
y = 0 → Do not open the shield
y_Close: Close Shield Output Signal
y = 1 → Operate motor to close shield
y = 0 → Do not close the shield

Mode: Shield Operation Mode
0 = Manual
1 = Disabled

MSC: Manual Signal to Close the Shield
1 = Close shield
0 = Do not close the shield
MSO: Manual Signal to Open the Shield
1 = Open shield
0 = Do not open the shield

SP = Shield Position
C_2 = Shield Fully Closed Position
C_1 = Shield Fully Open Position

ESS: Emergency Stop Signal
0 = Continue Normally
1 = Stop Shield Movement

Figure 60. Top Shield Logic

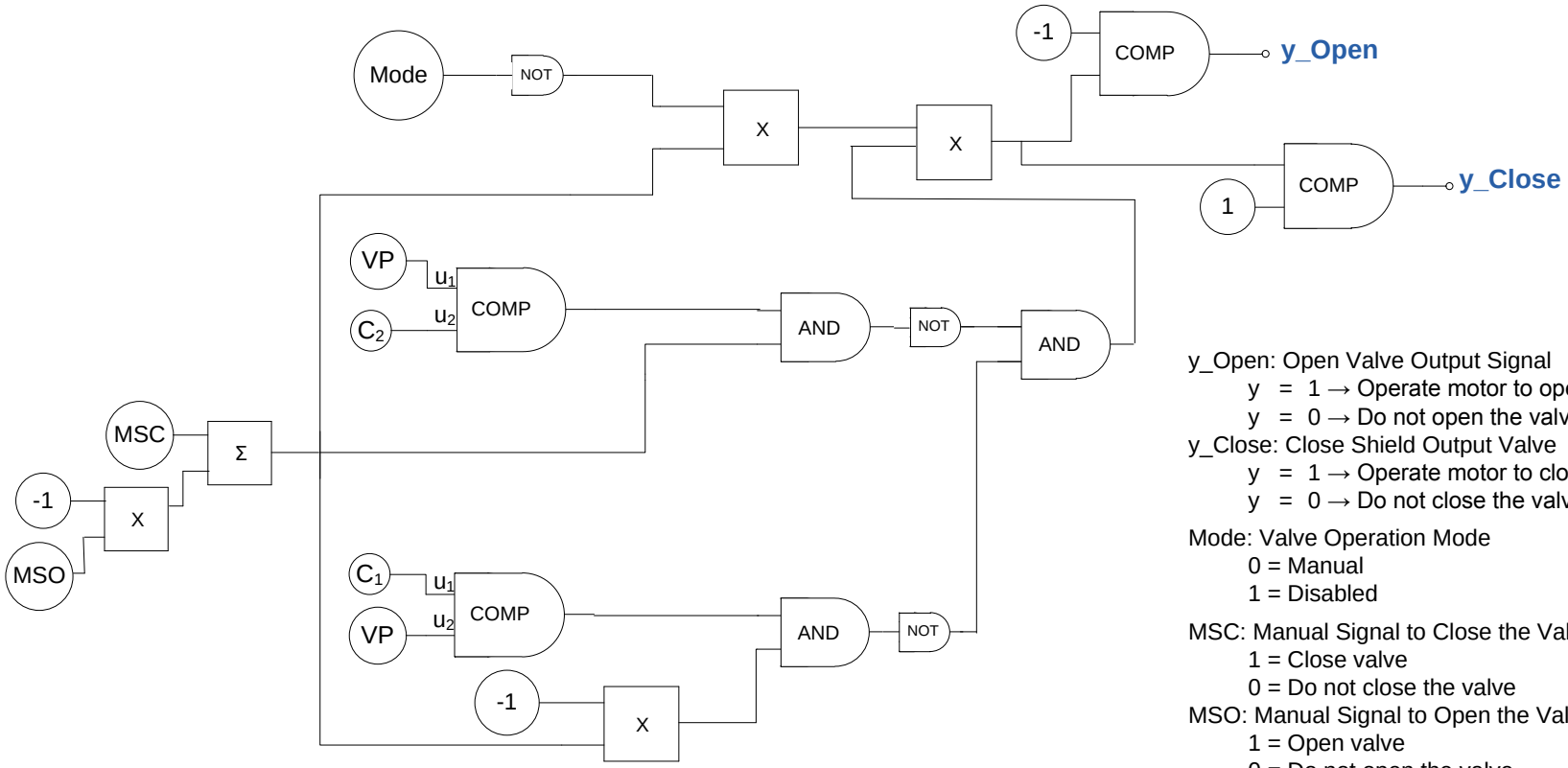

y_Open: Open Valve Output Signal
y = 1 → Operate motor to open valve
y = 0 → Do not open the valve
y_Close: Close Shield Output Valve
y = 1 → Operate motor to close valve
y = 0 → Do not close the valve

Mode: Valve Operation Mode
0 = Manual
1 = Disabled

MSC: Manual Signal to Close the Valve
1 = Close valve
0 = Do not close the valve
MSO: Manual Signal to Open the Valve
1 = Open valve
0 = Do not open the valve

VP = Valve Position
C_2 = Valve Fully Closed Position
C_1 = Valve Fully Open Position

Figure 61. Valve Logic

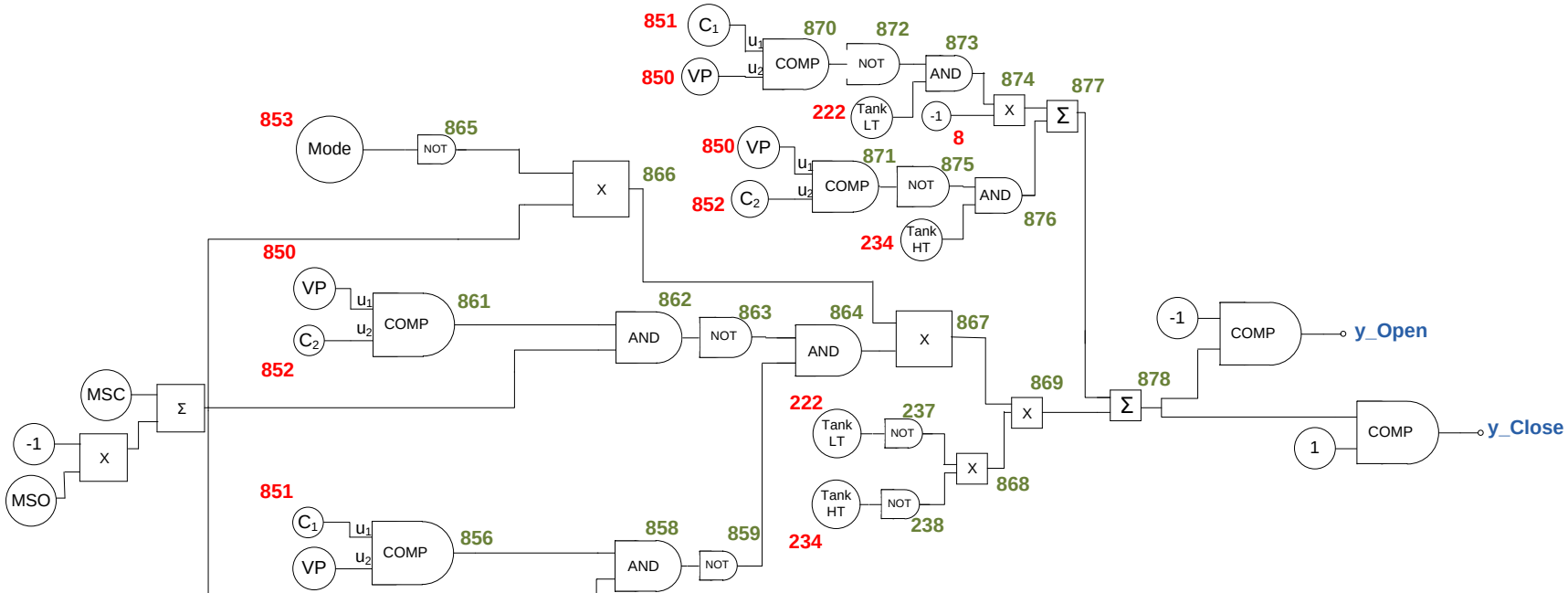

Figure 62. SCA Valve Logic

y: Output Signal

y = 1 → Turn pump motor on

y = 0 → Turn pump motor off

Signal: Operation Signal for Pump

1 = Turn Pump On

0 = Turn Pump Off

Figure 63. Pump Logic

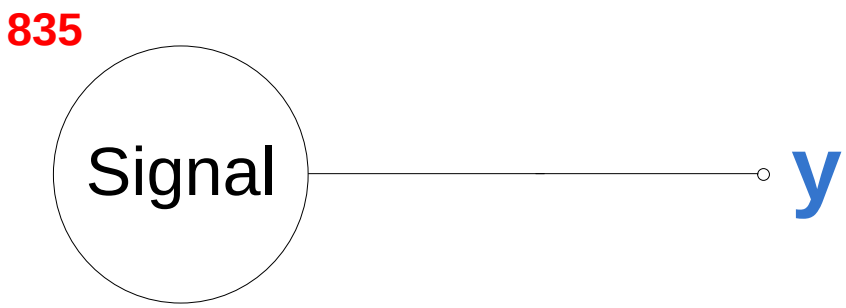

y: Output Signal

y = 1 → Turn blower motor on

y = 0 → Turn blower motor off

Signal: Operation Signal for Blower

1 = Turn Blower On

0 = Turn Blower Off

Figure 64. Blower Logic

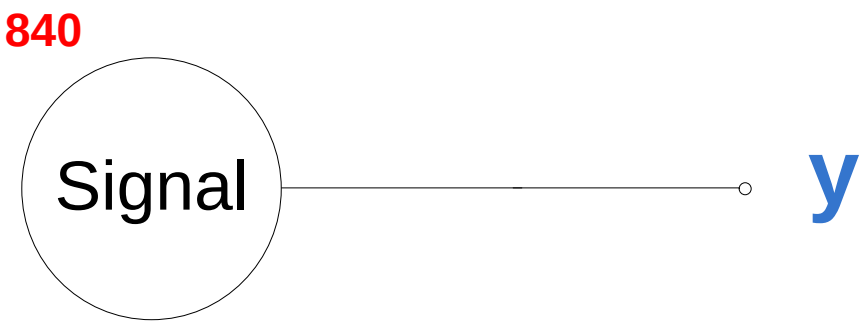

y: Output Signal

y = 1 → Enable Fuel Arm

y = 0 → Disable Fuel Arm

Signal: Operation Signal for Fuel Arm

1 = Enable Fuel Arm

0 = Disable Fuel Arm

Figure 65. Fuel Arm Logic

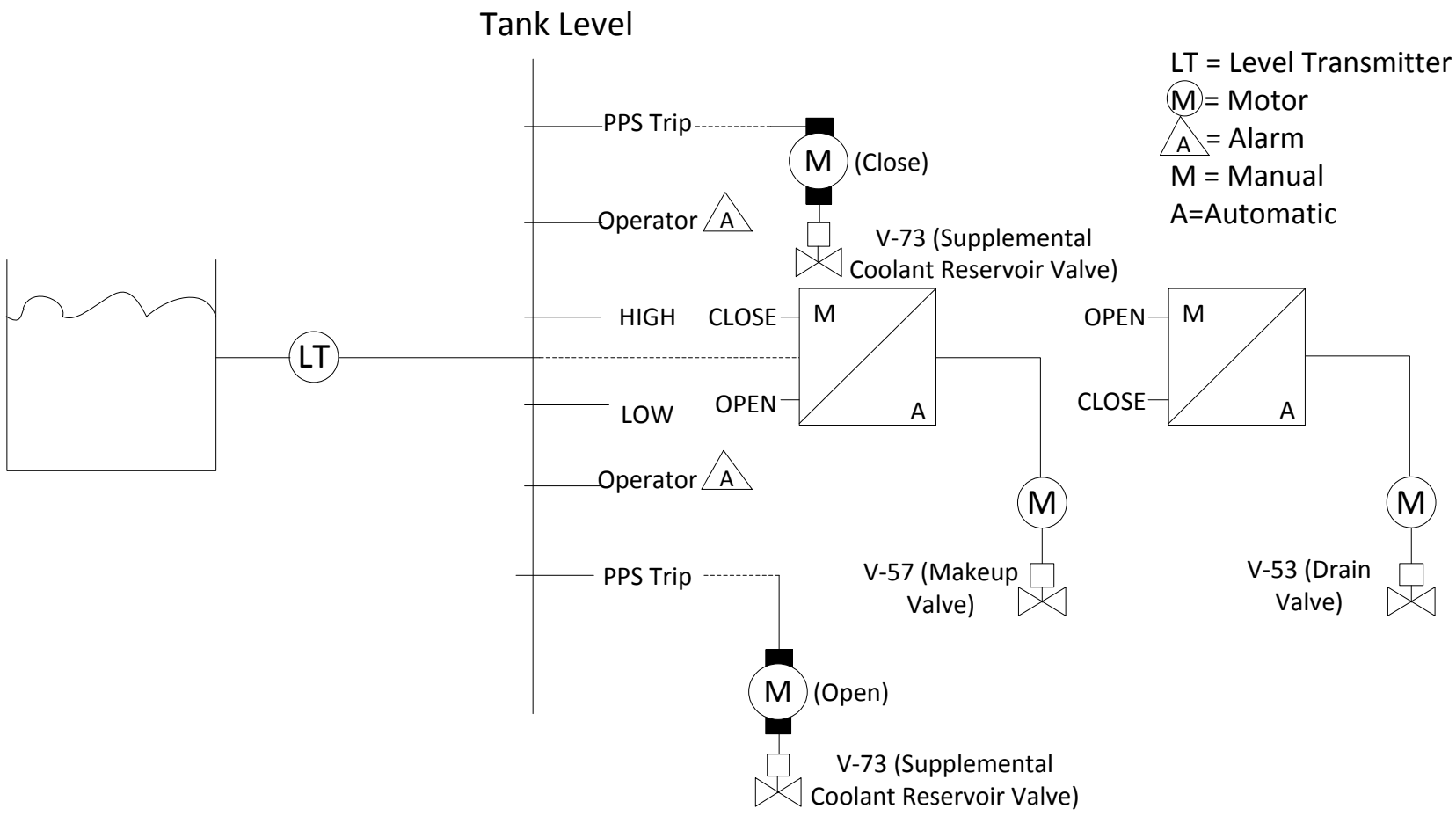

Figure 66. SCA Cooling System PCS SCA Tank Level Controller

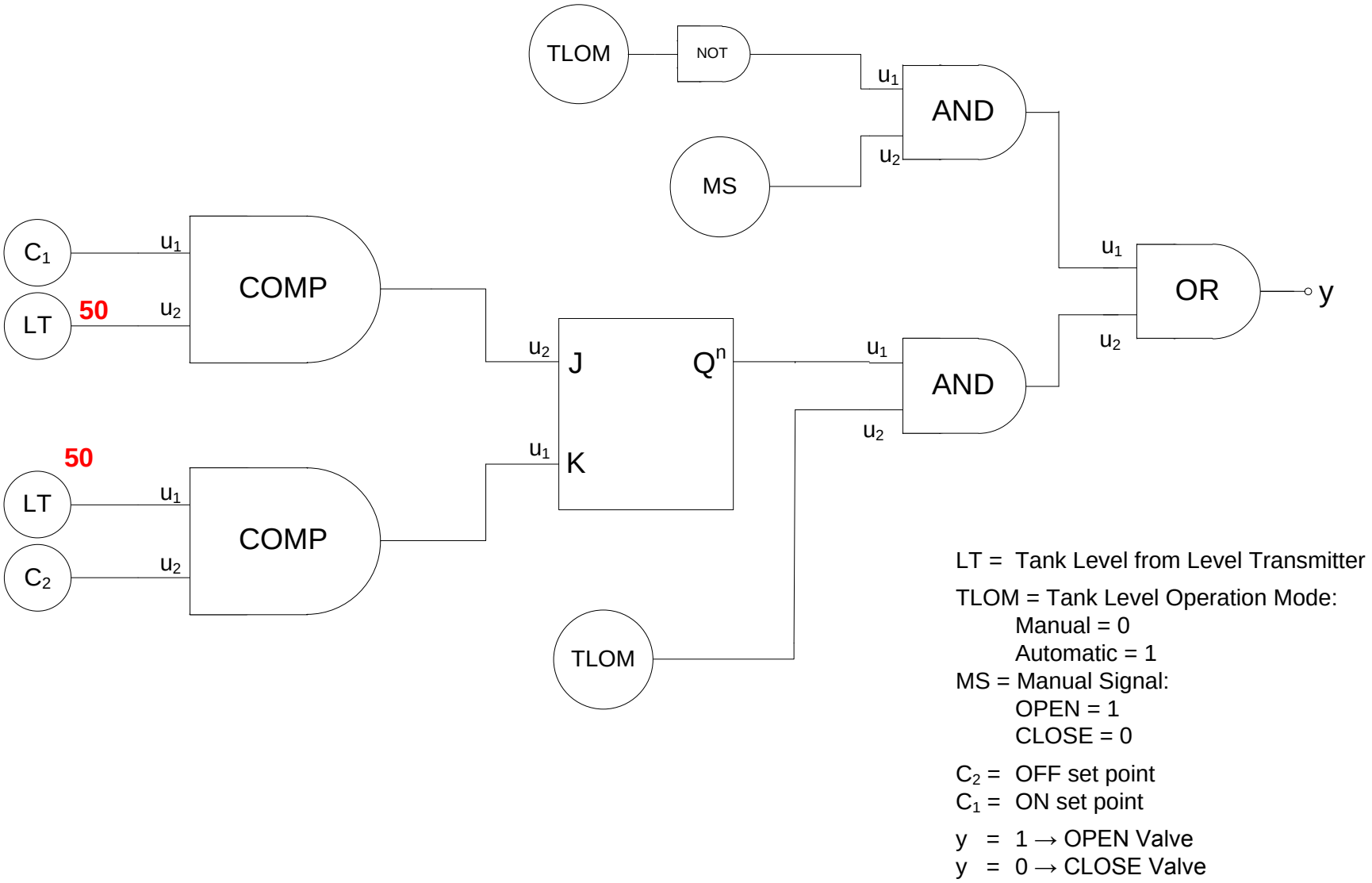

Figure 67. Tank Level V-57 Controller Logic

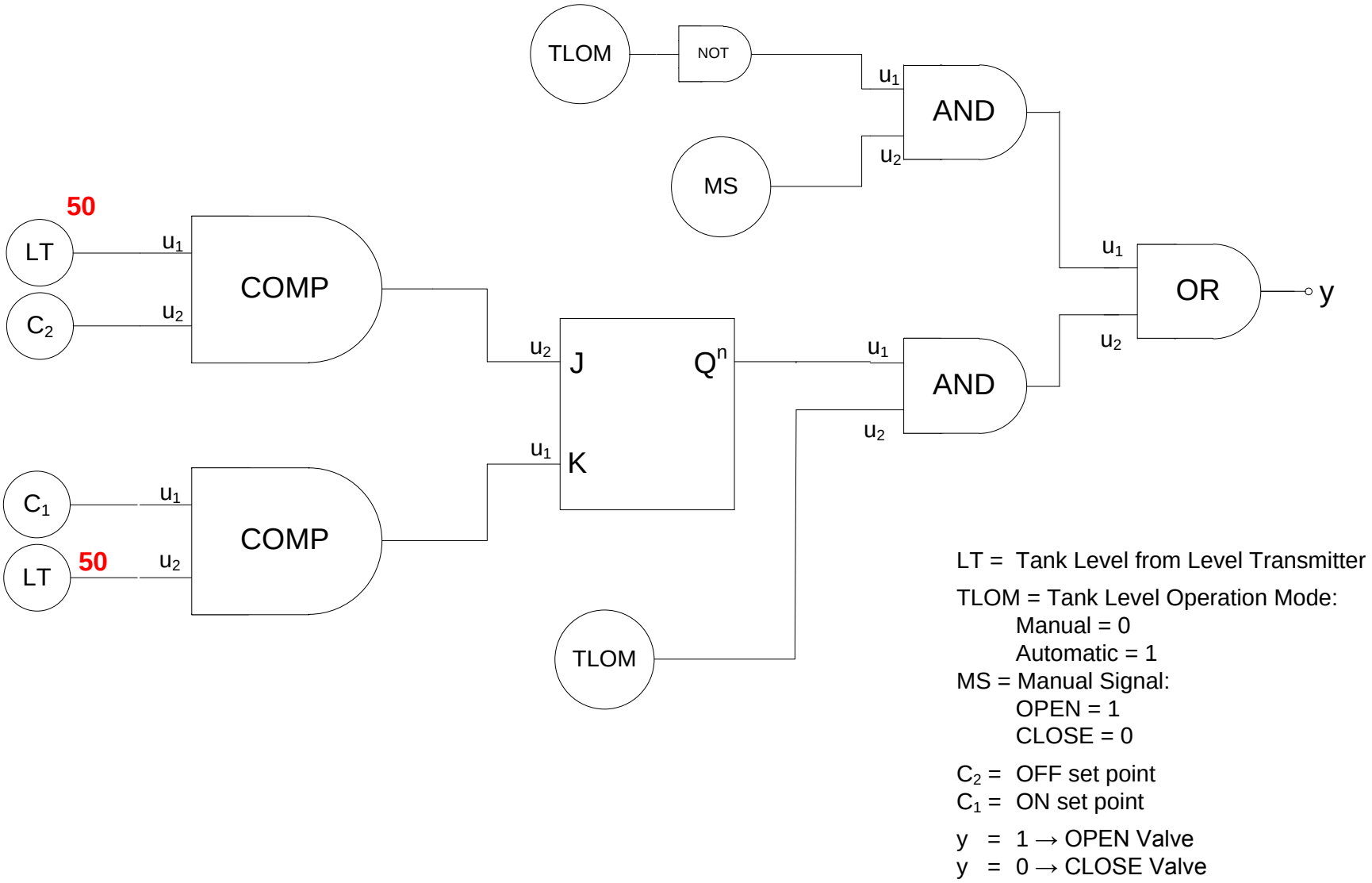

Figure 68. Tank Level V-53 Controller Logic

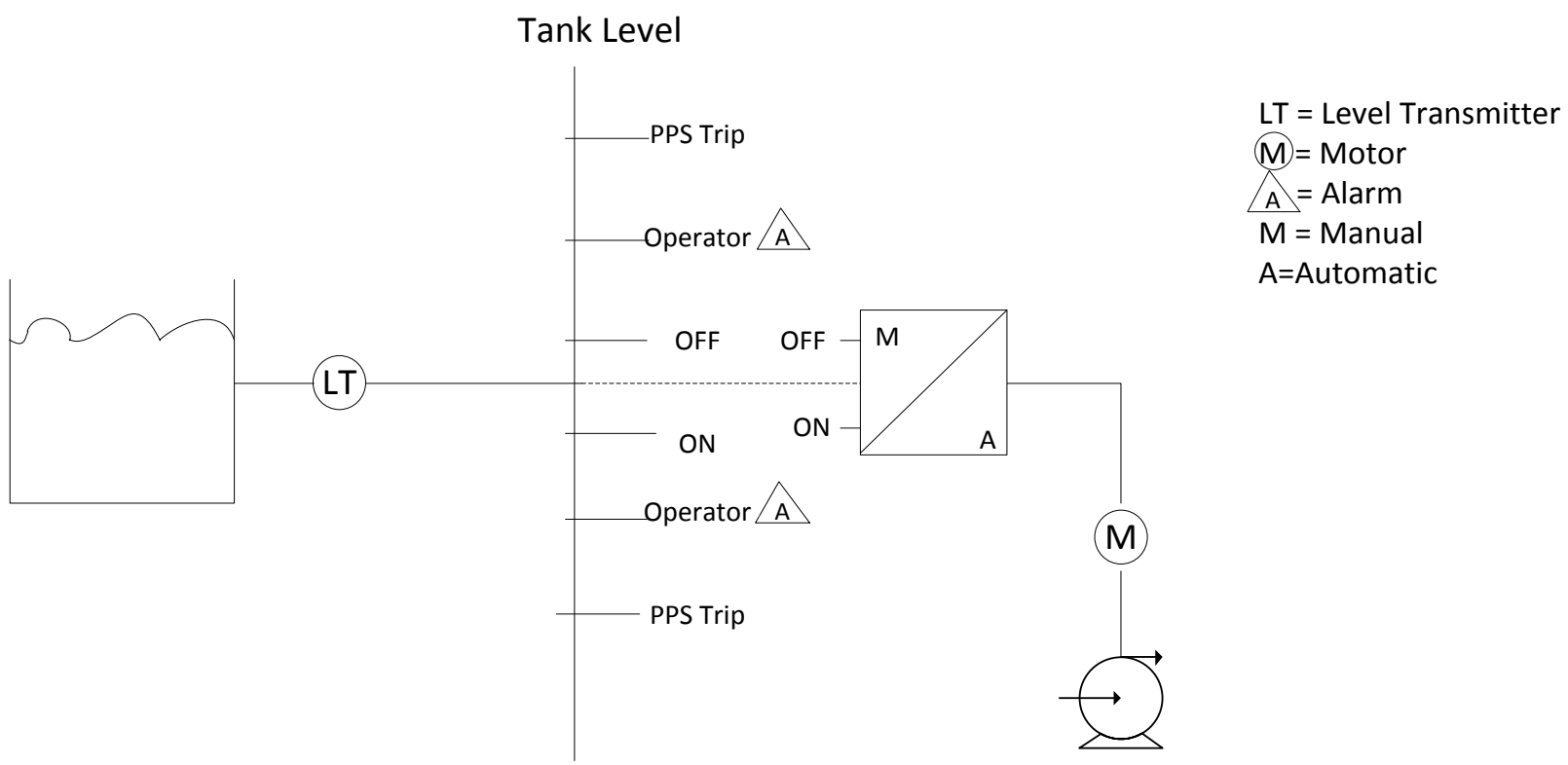

Figure 69. Storage Pool Coolant System PCS Fuel Pool Level Controller

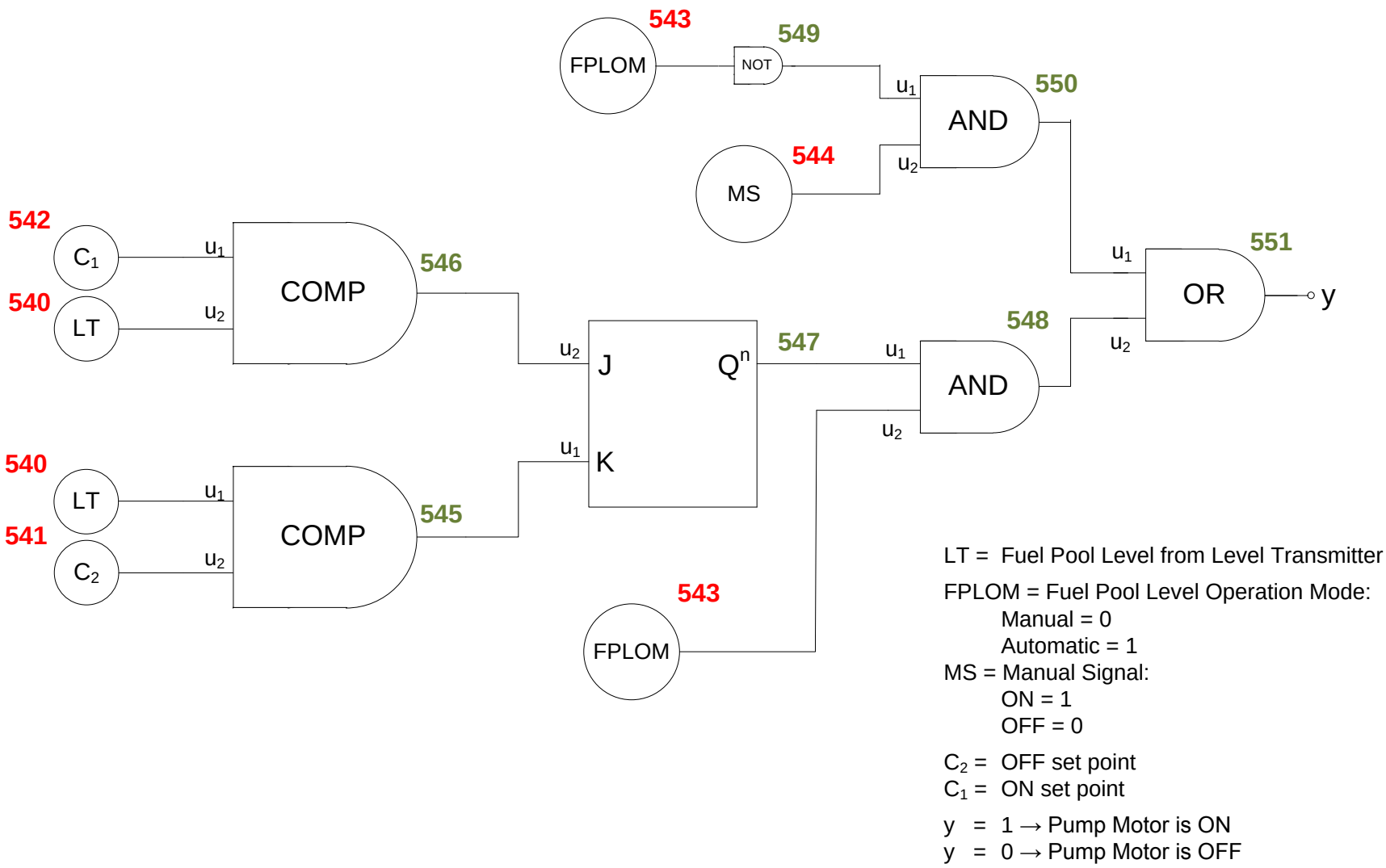

Figure 70. Storage Pool Level Controller Logic

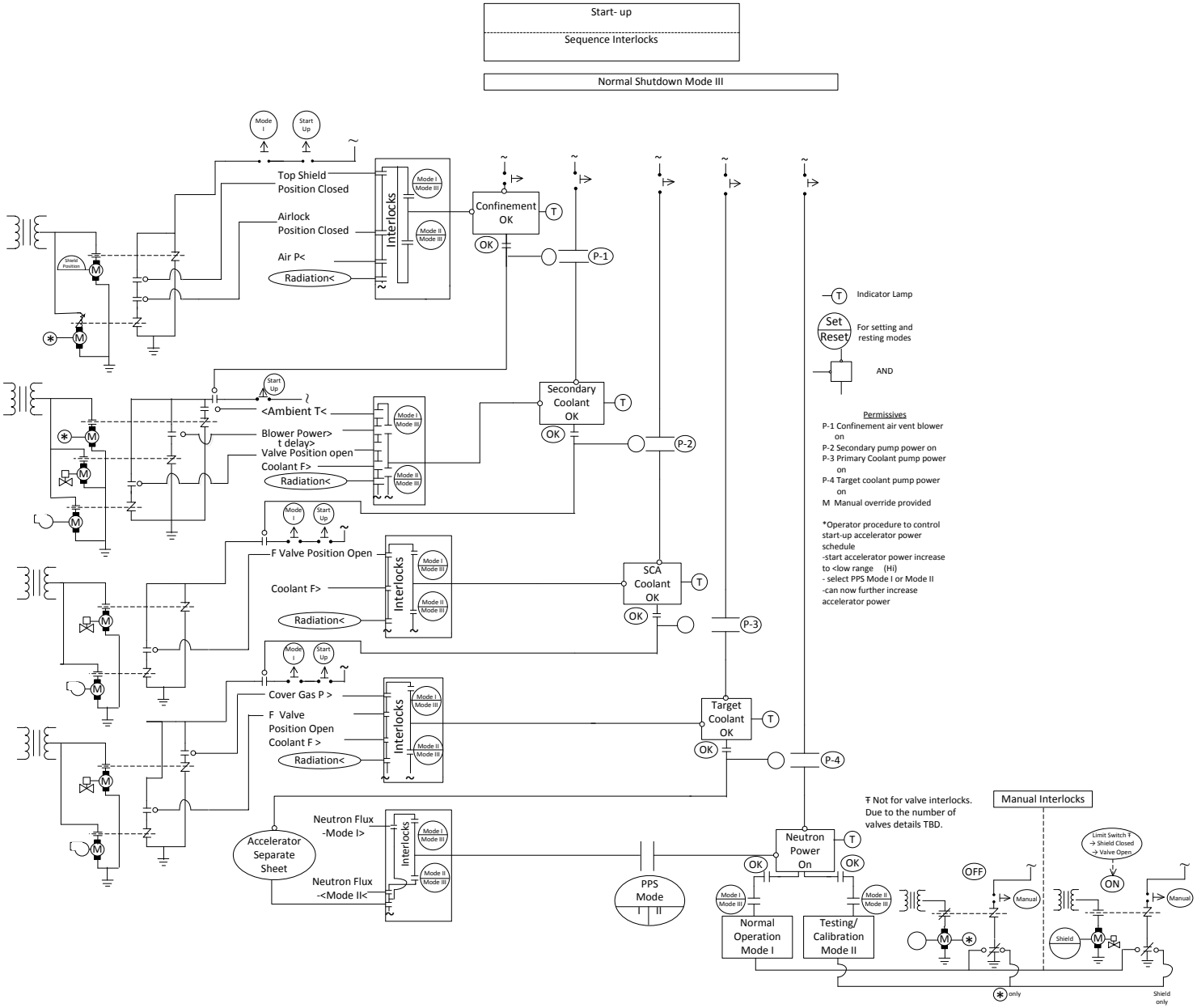

Figure 71. Start-up Sequence Interlocks

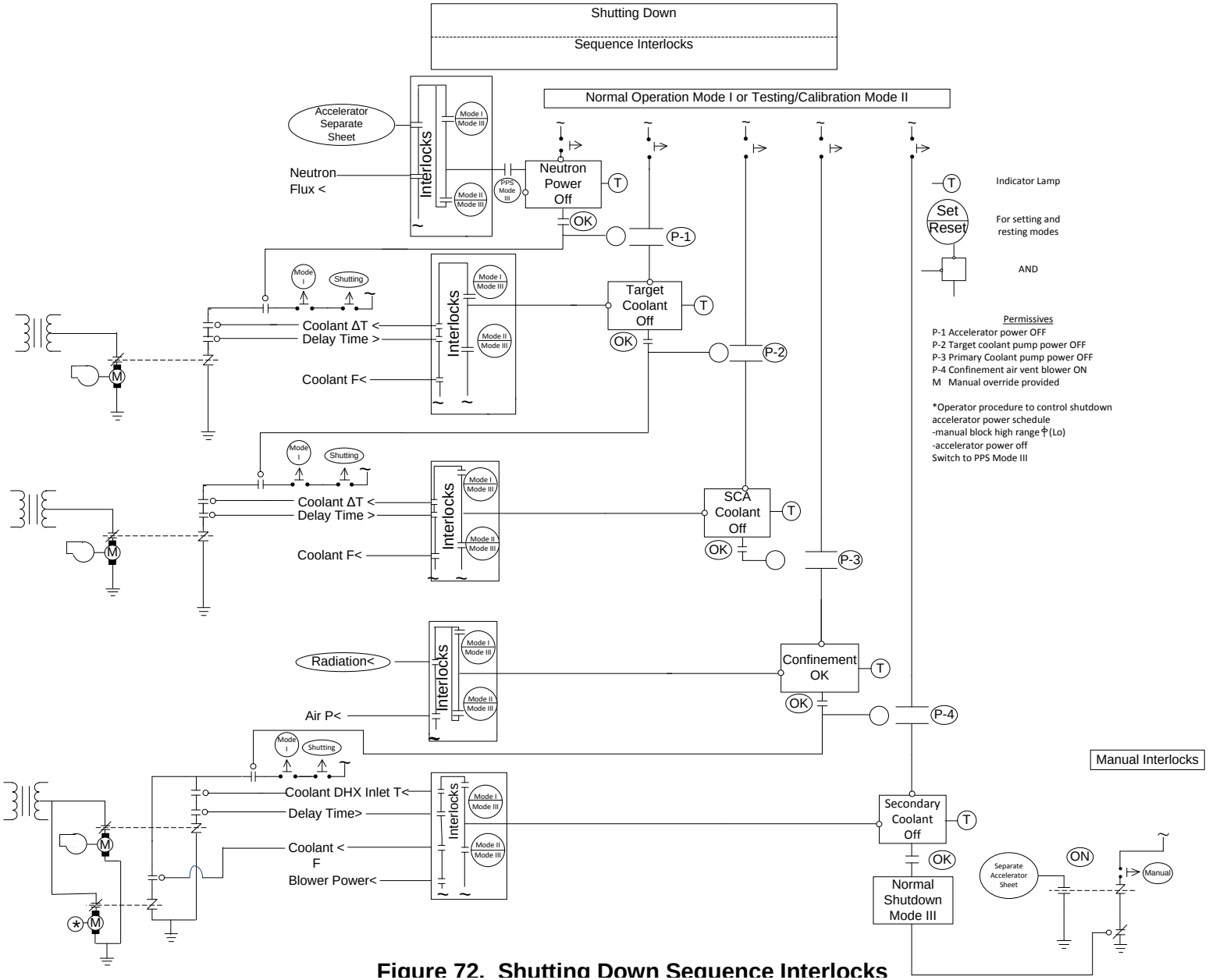

Figure 72. Shutting Down Sequence Interlocks

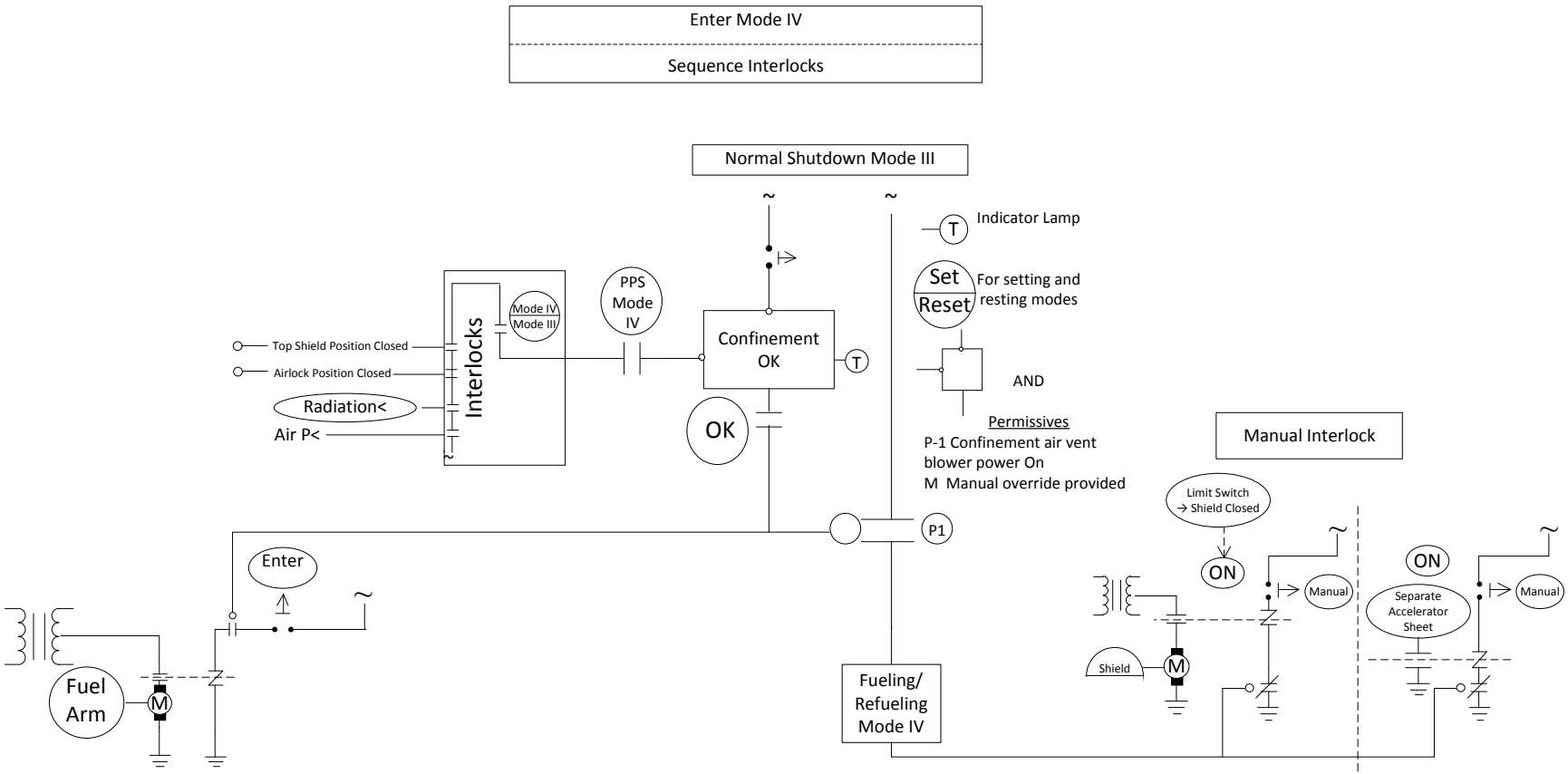

Figure 73. Enter Mode IV Sequence Interlocks

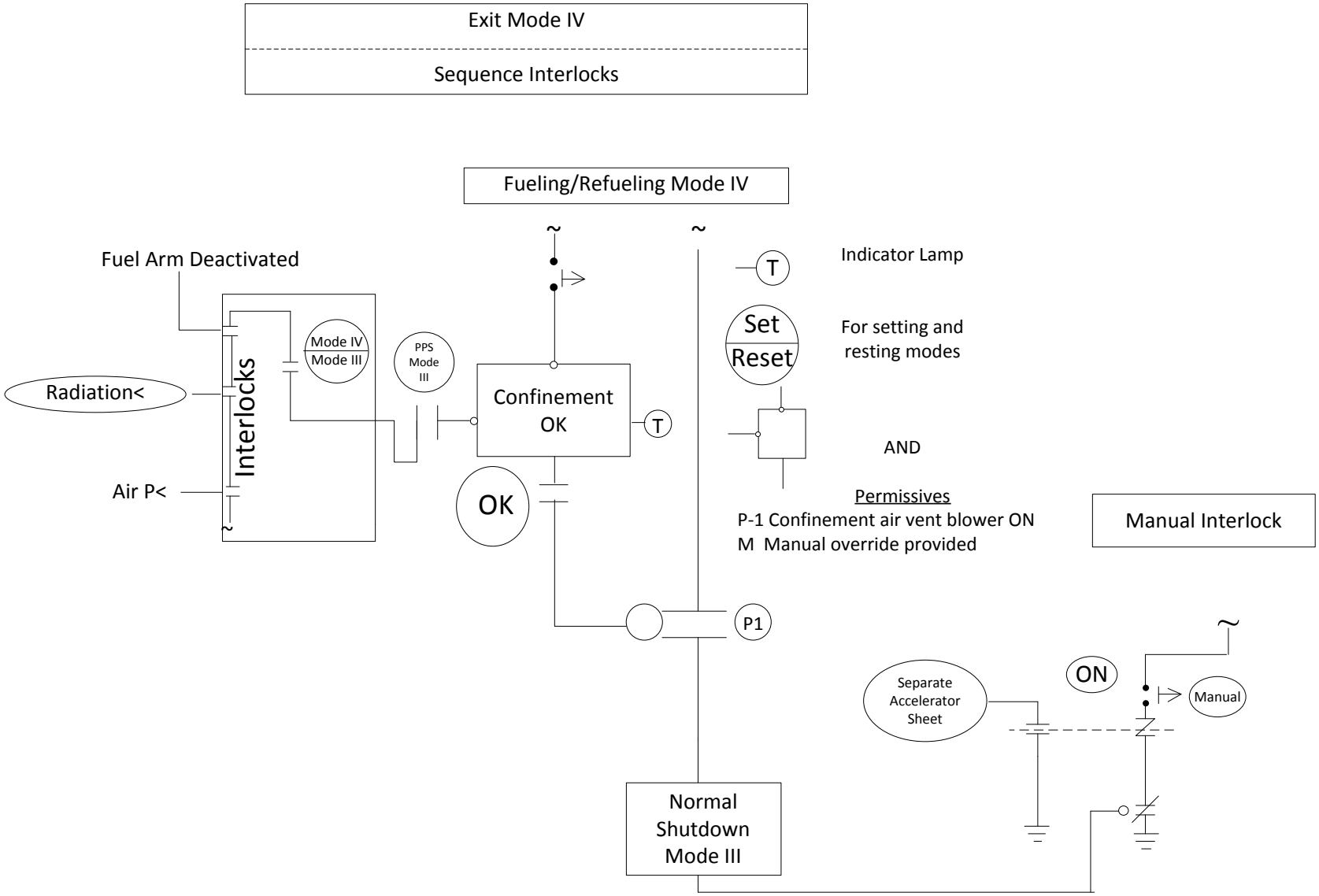

Figure 74. Exit Mode IV Sequence Interlocks

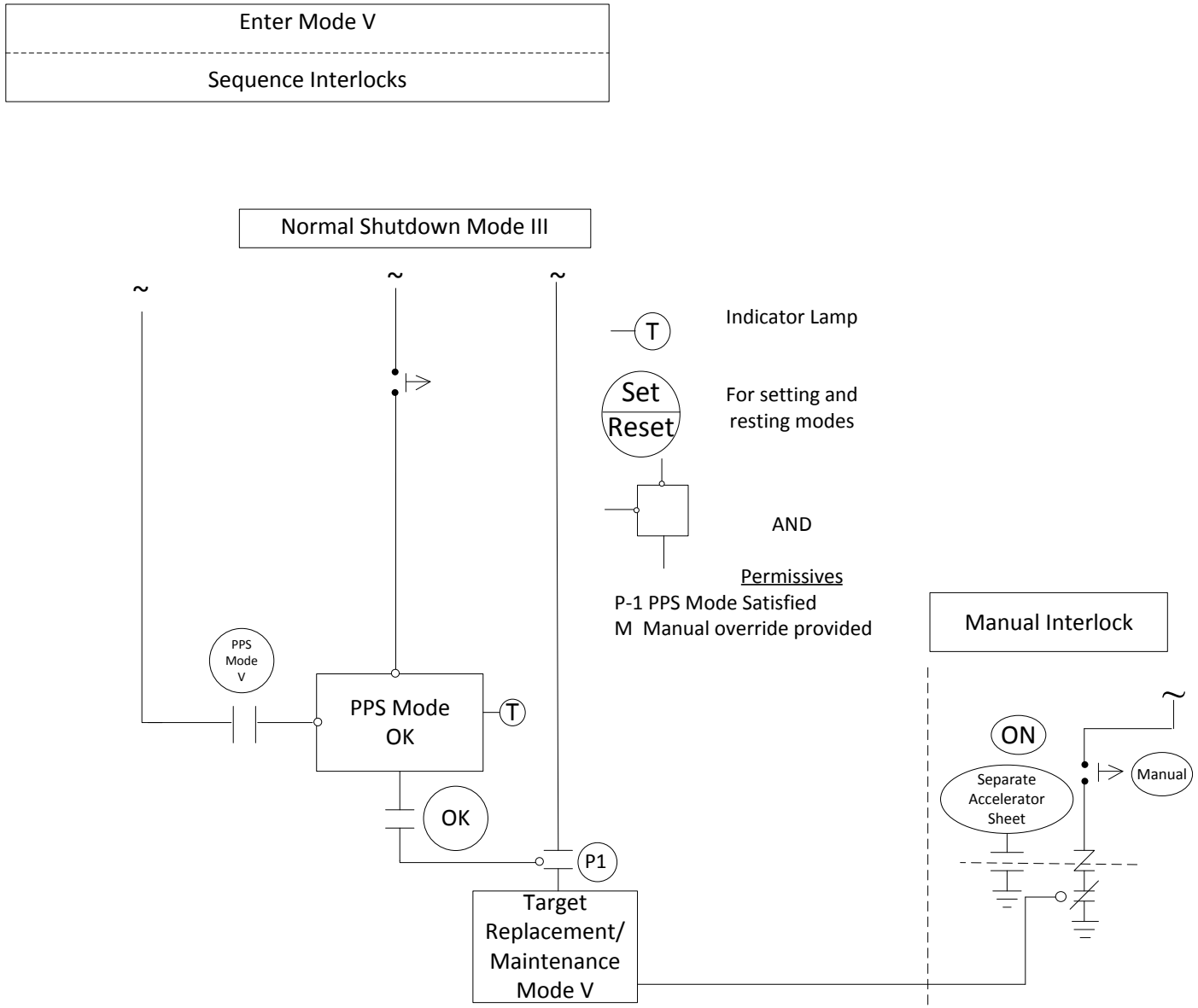

Figure 75. Enter Mode V Sequence Interlocks

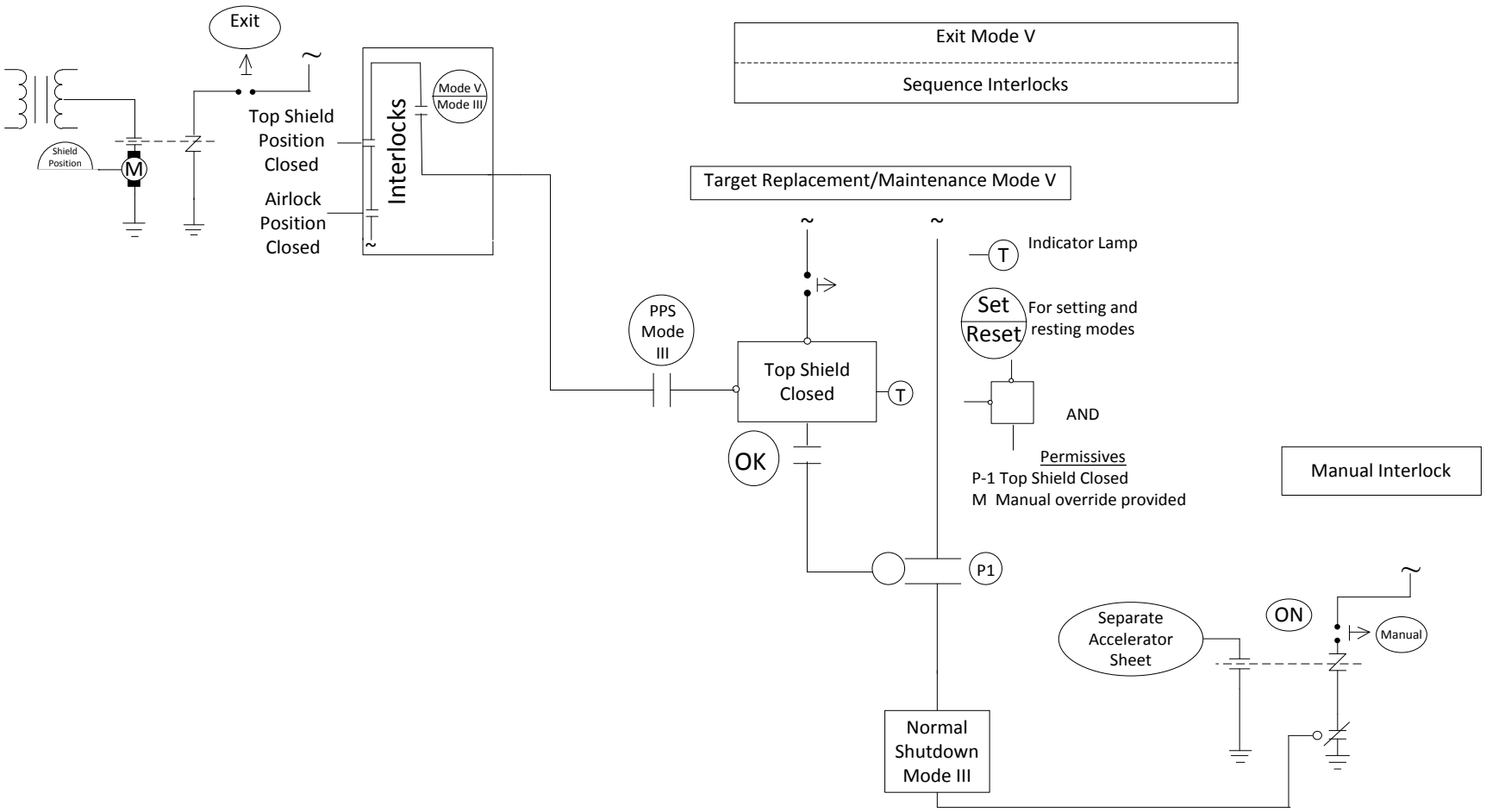

Figure 76. Exit Mode V Sequence Interlocks

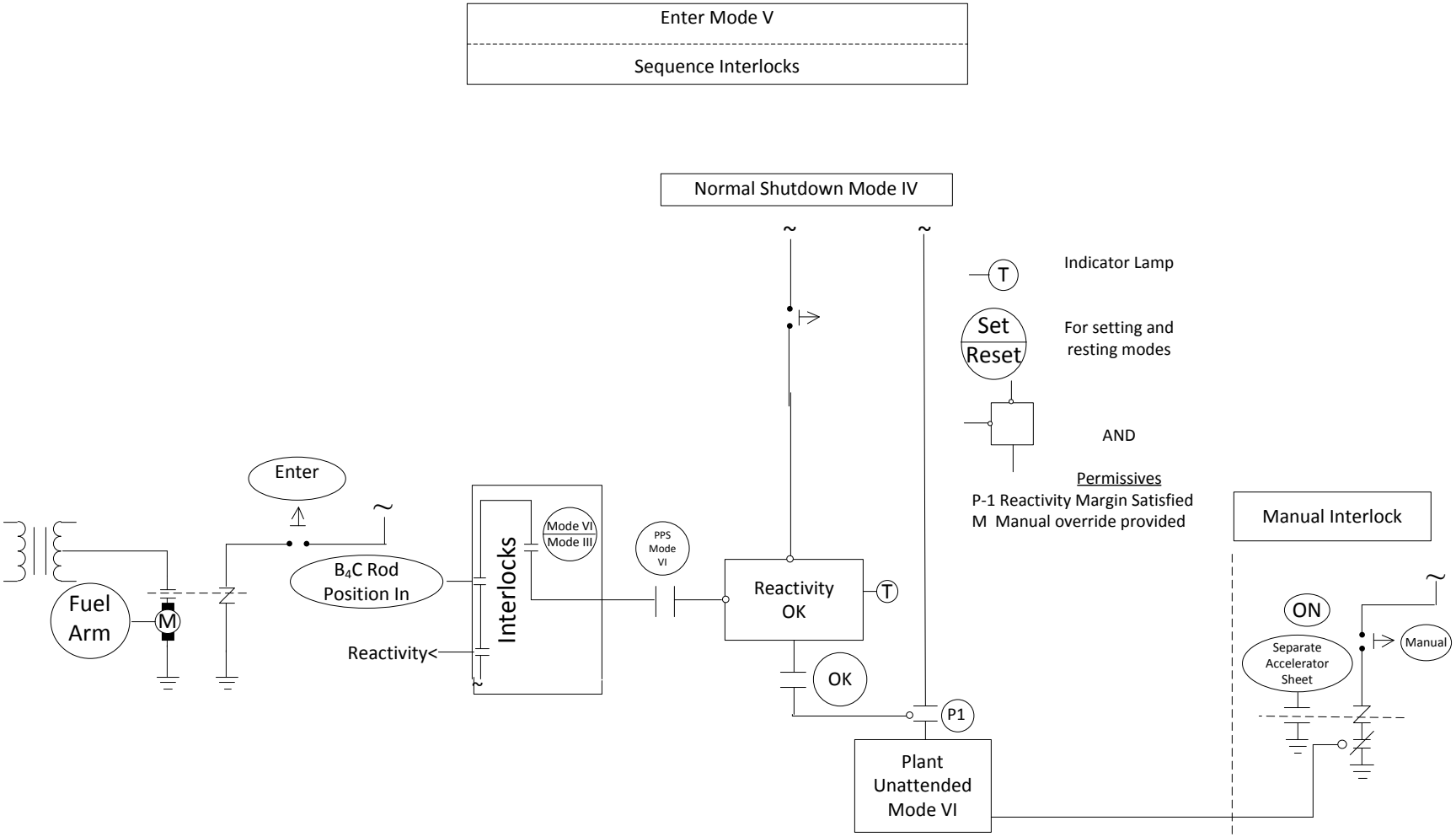

Figure 77. Enter Mode VI Sequence Interlocks

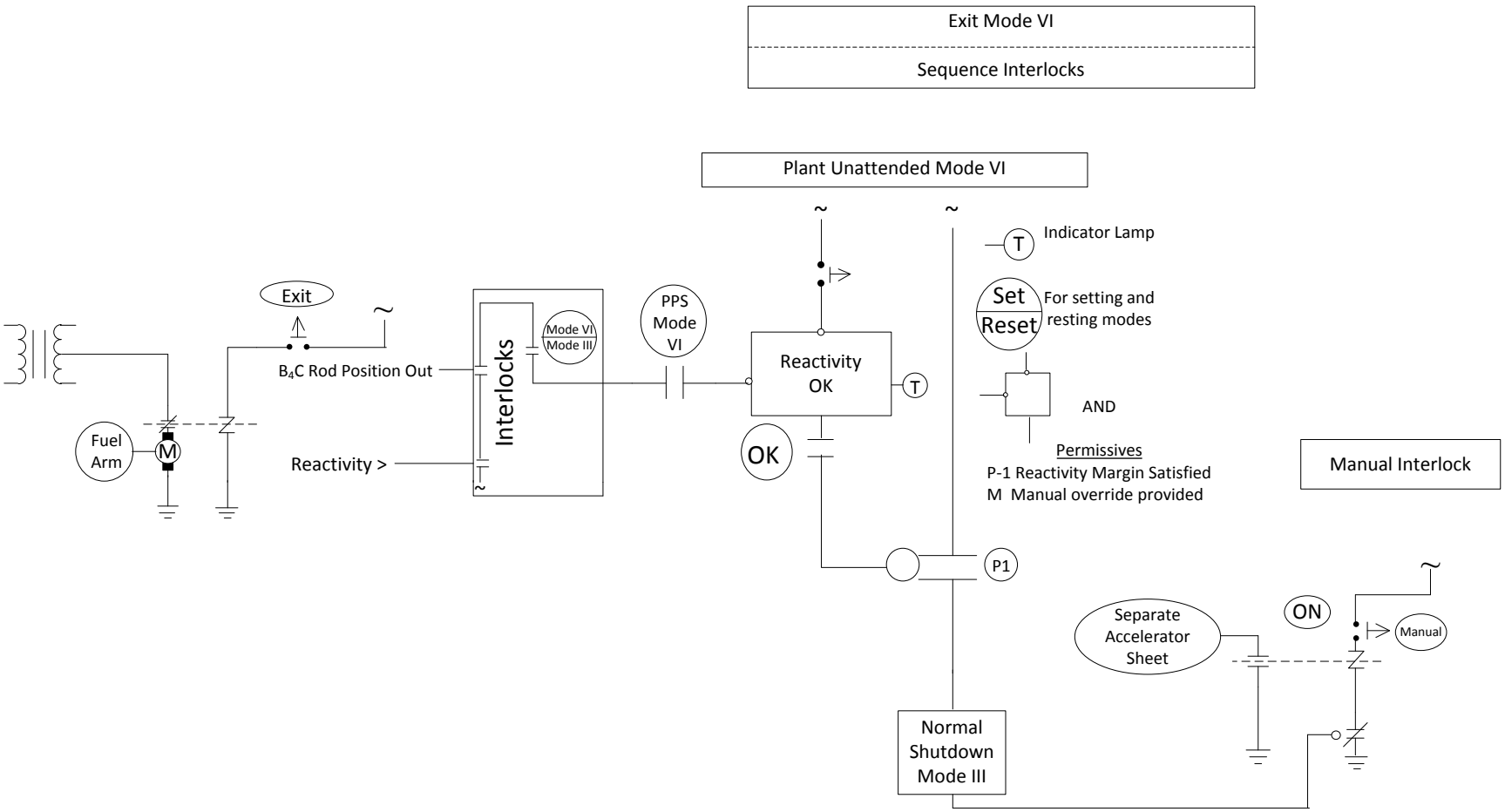

Figure 78. Exit Mode VI Sequence Interlocks

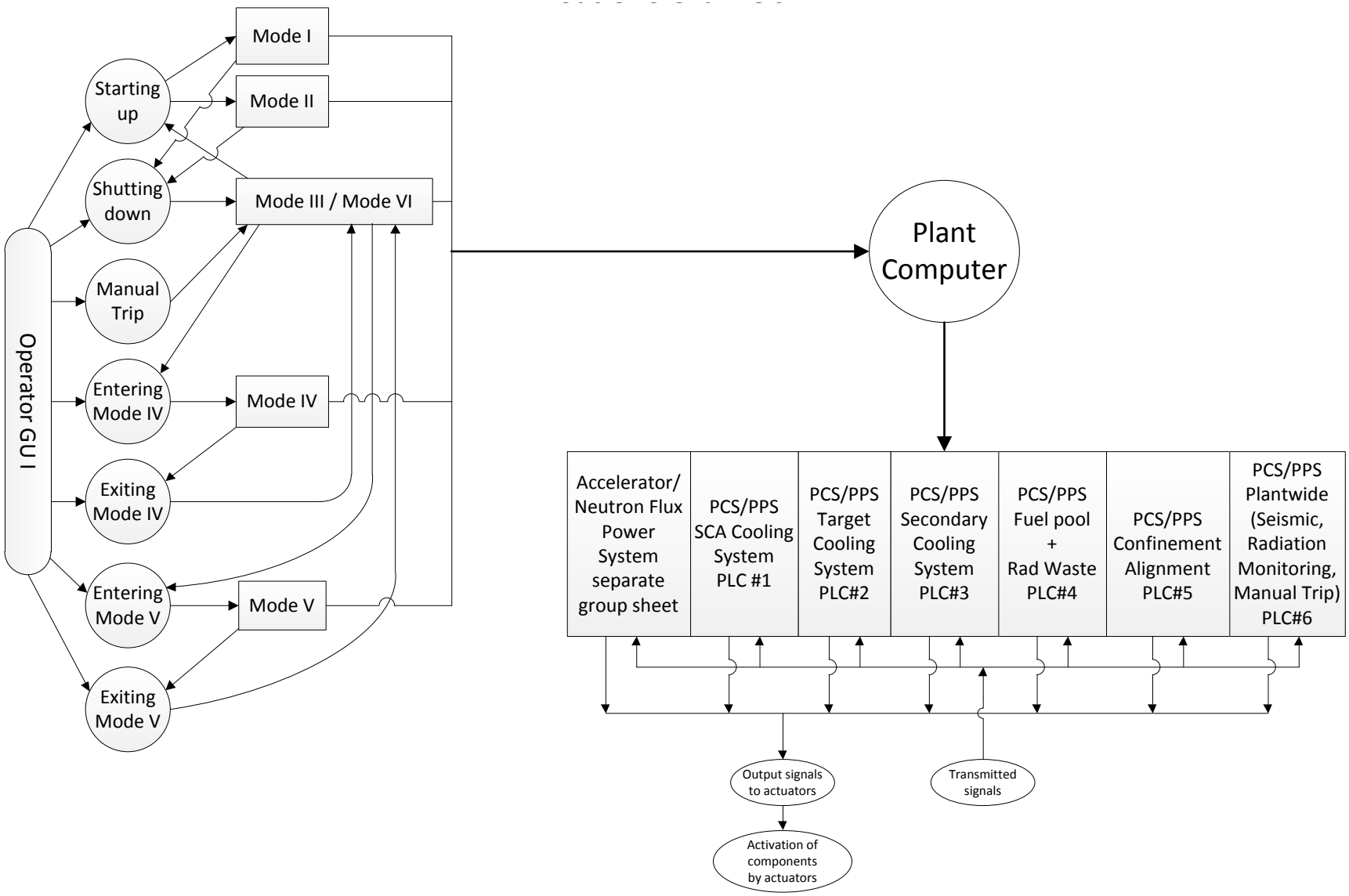

Figure 79. Plant Computer System Architecture 1-out-of-3 Channels

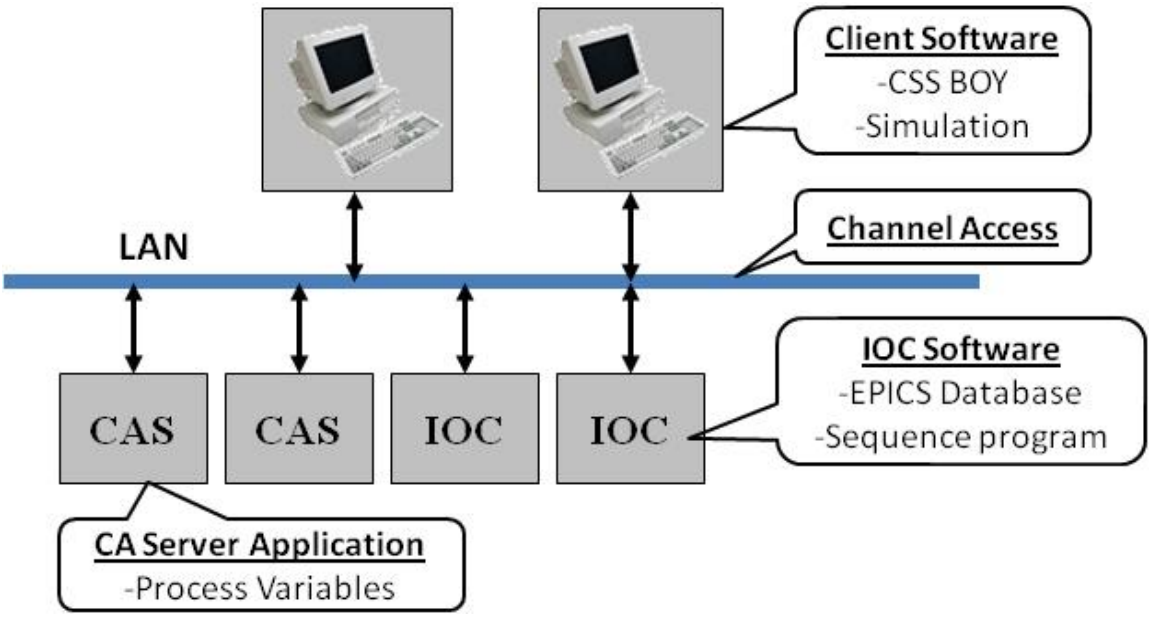

Figure 80. EPICS Control System

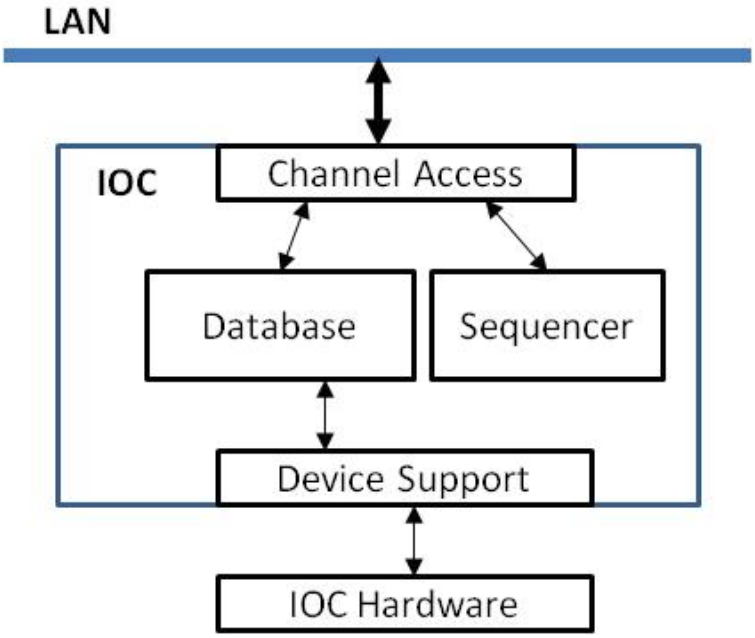

Figure 81. Structure of IOC

Analog input record	Calculation record	Binary output record
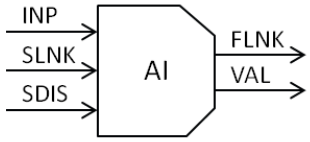 DTYP: XY566 SCAN: Passive EGU: Celcius	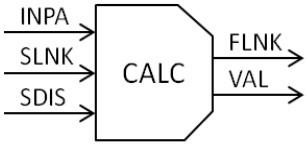 SCAN: Passive	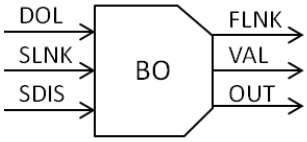 DTYP: XY220 SCAN: .1 second OMSL: closed_loop

record(ai, “scs:flow")
{
field(DTYP,“XY566")
field(SCAN,“Passive")
field(EGU,"lpm")
}
	record(calc, "scs:alarm")
	{
	field(SCAN,“Passive")
	field(INPA,"scs:flow PP NMS")
	field(CALC,"A>10.0?1:0")
	}
		record(bo, "scs:solenoid")
		{
		field(DTYP,“XY220")
		field(SCAN,“.1 second")
		field(OMSL,“closed_loop")
		field(DOL,” scs:alarm"
		}

Figure 82. Examples of EPICS records

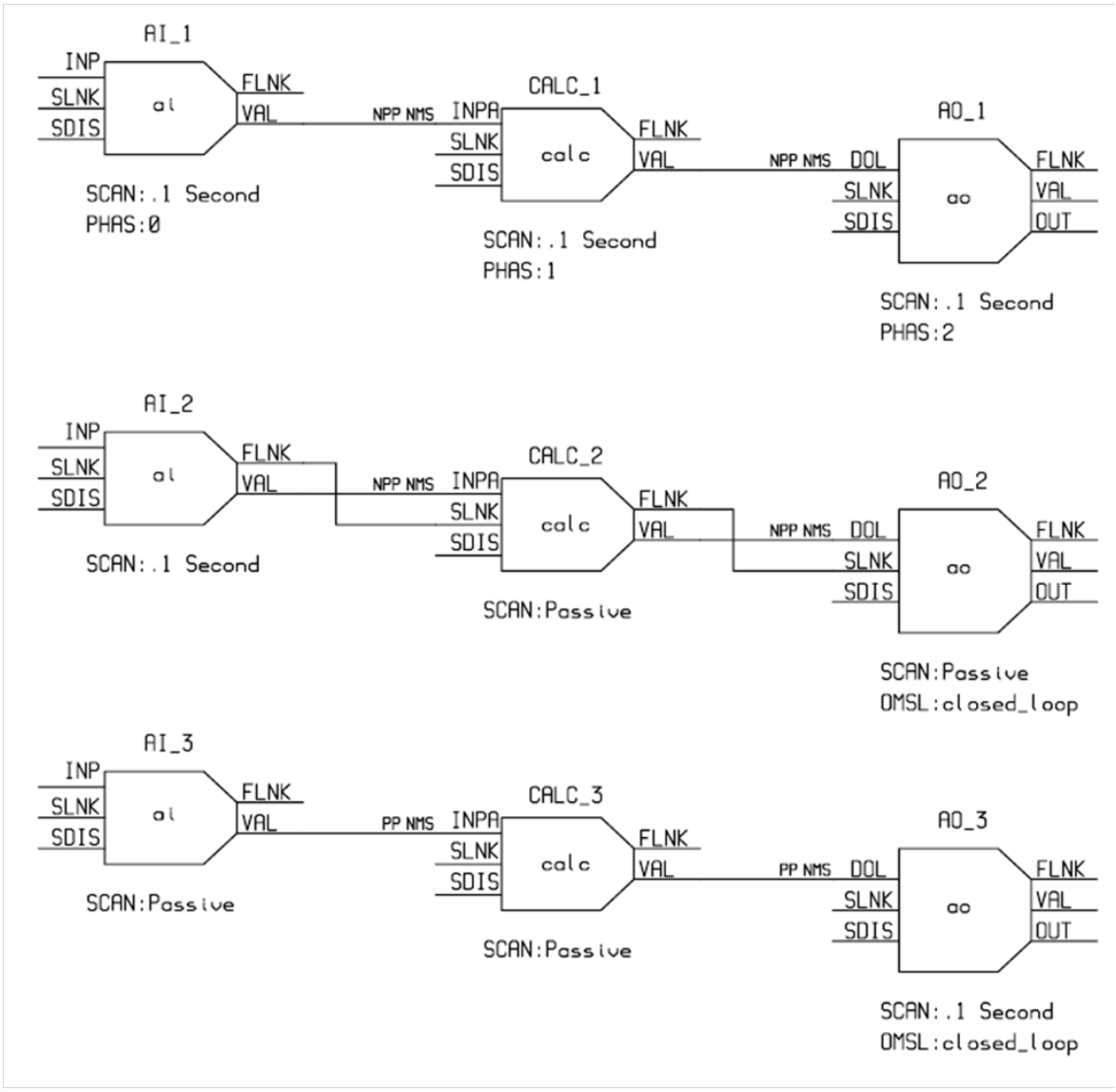

Figure 83. Linked records

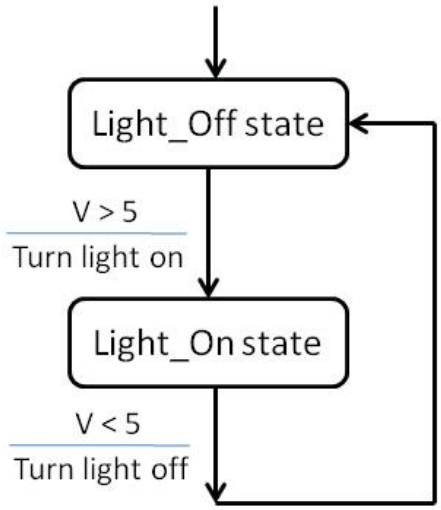


```
state light_off {
    when (v > 5.0) {
        light = TRUE;
        pvPut(light);
    } state light_on
}

state light_on {
    when (v < 5.0) {
        light = FALSE;
        pvPut(light);
    } state light_off
}
```

Figure 84. An example of SNL implementation of a state transition diagram

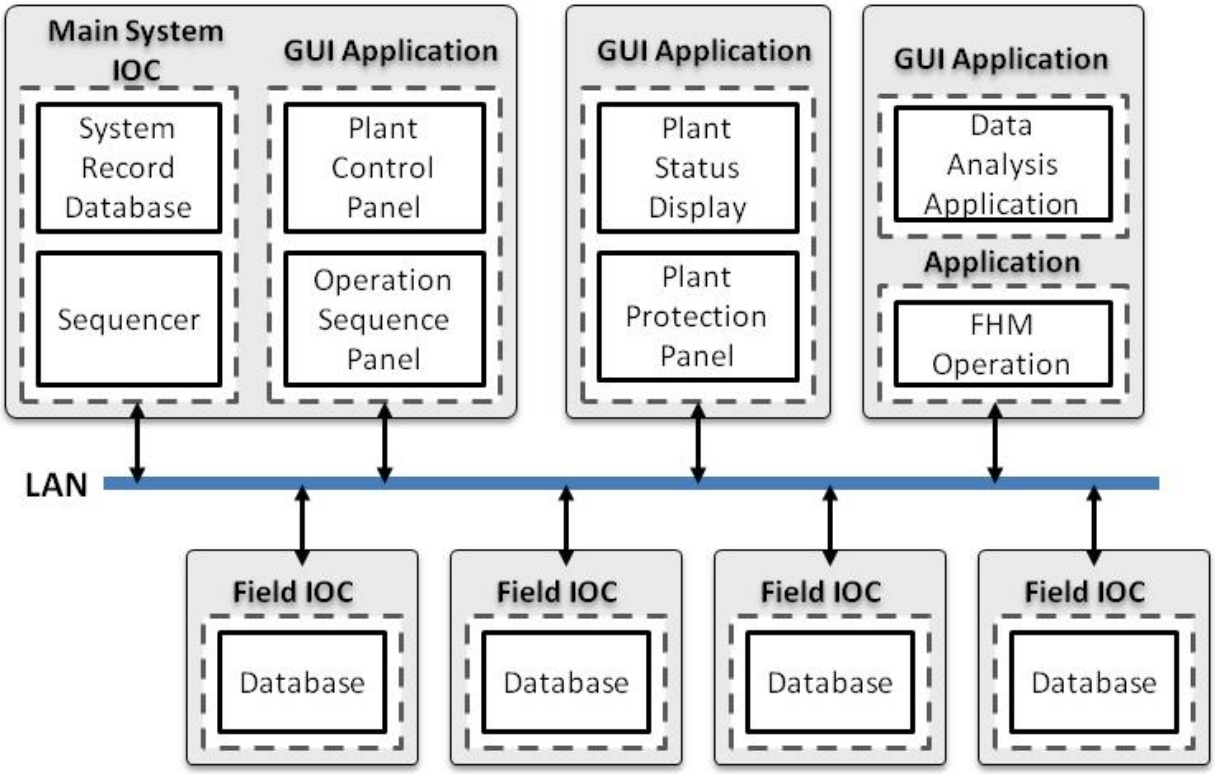

Figure 85. EPICS based control system structure for KIPT/AIDS

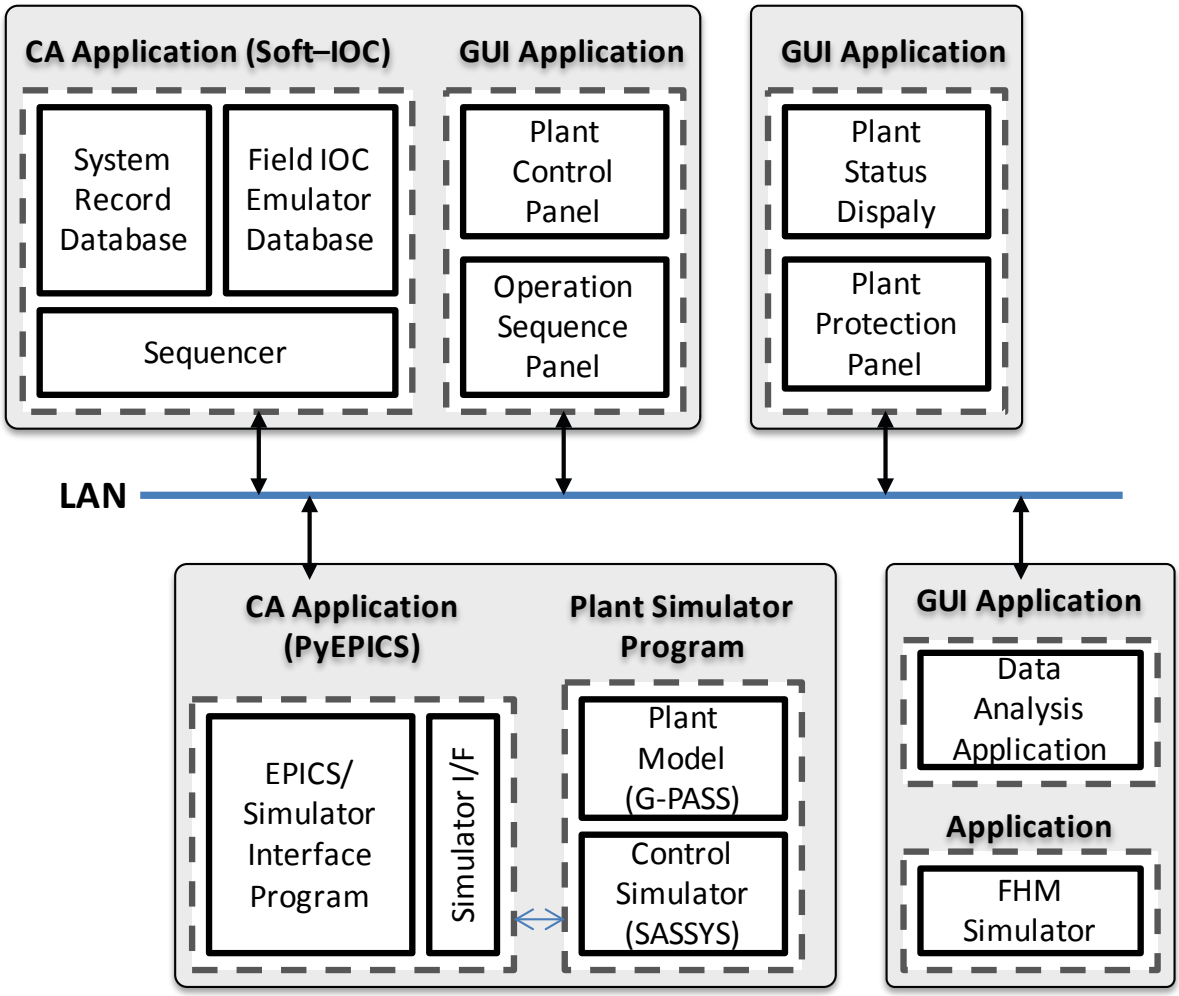

Figure 86. KIPT/ADS control system configured for test with simulator

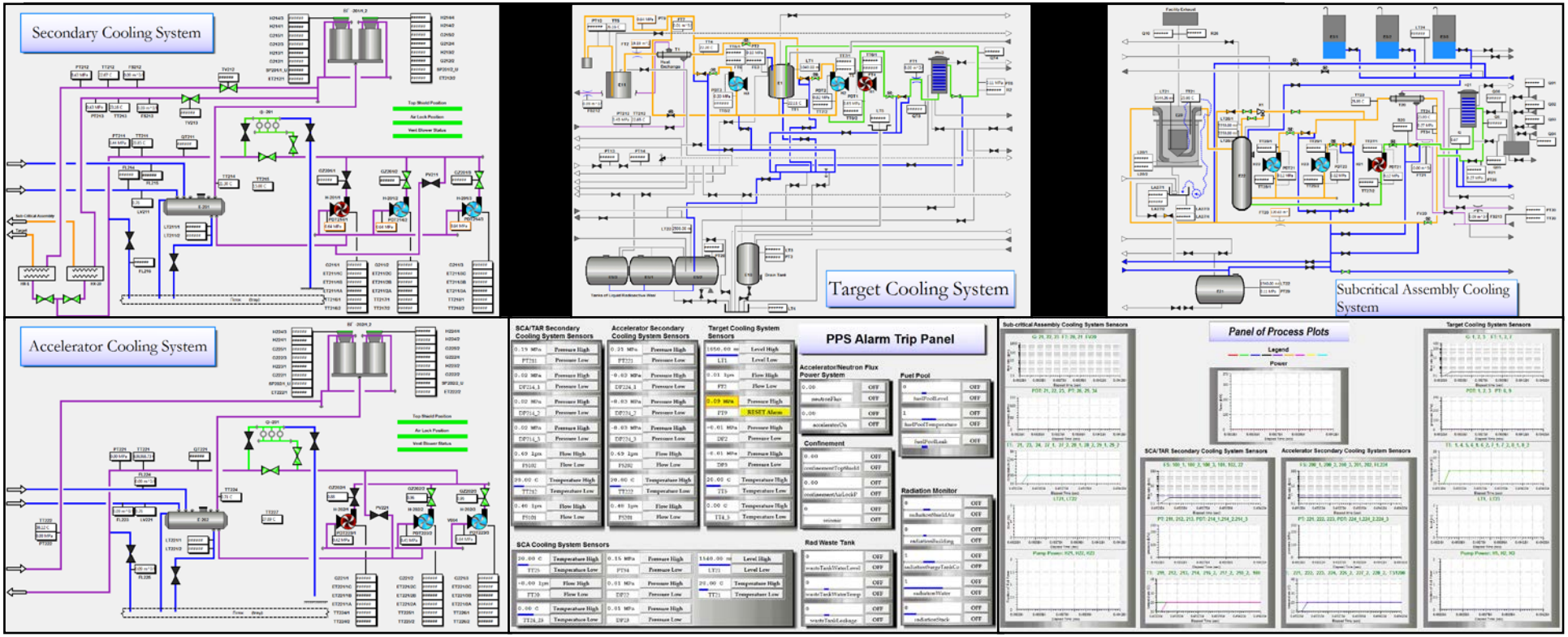

(a) Plant status panels

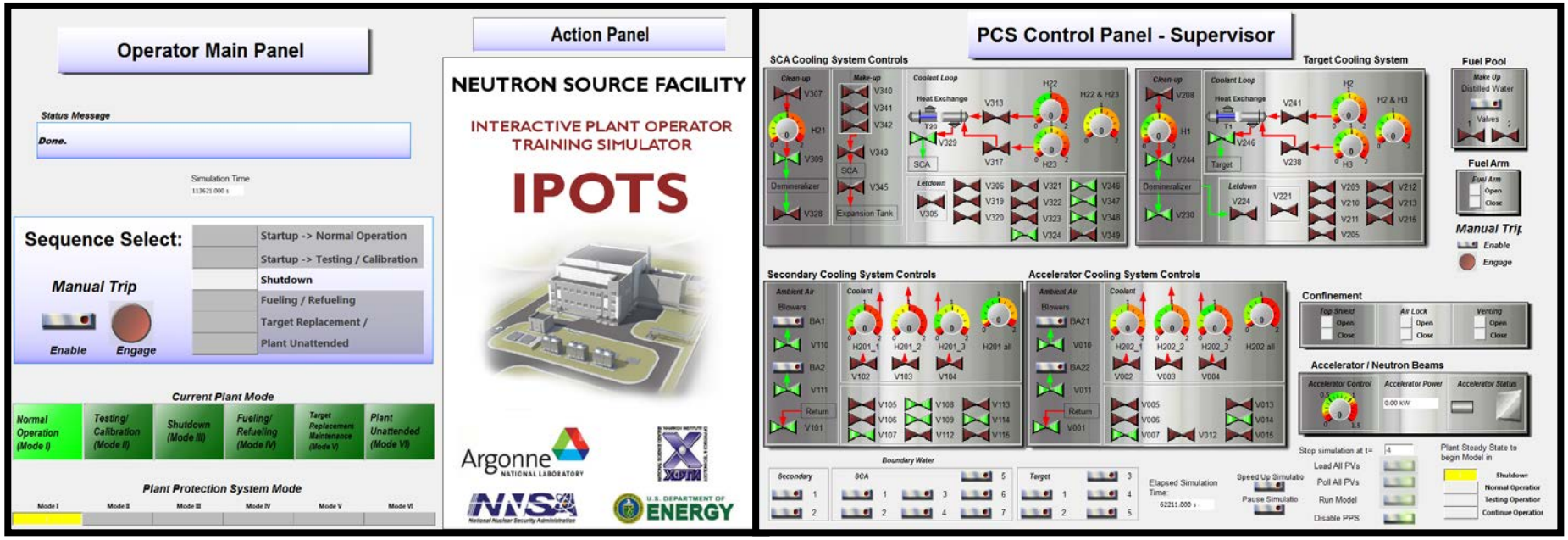

(b) Plant control panels

Figure 87. Overall layouts of the GUI panels

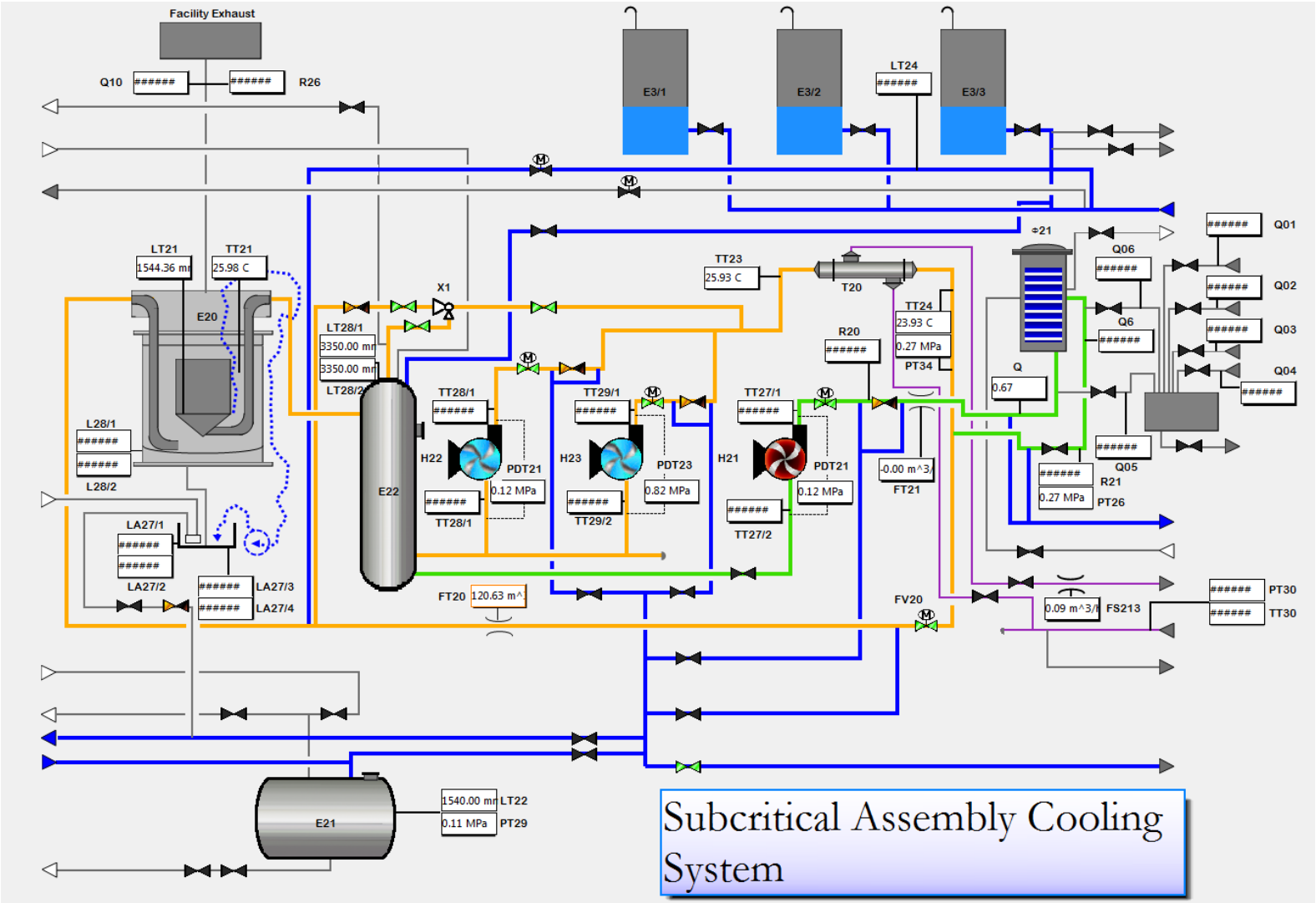

Figure 88. SCA cooling system panel

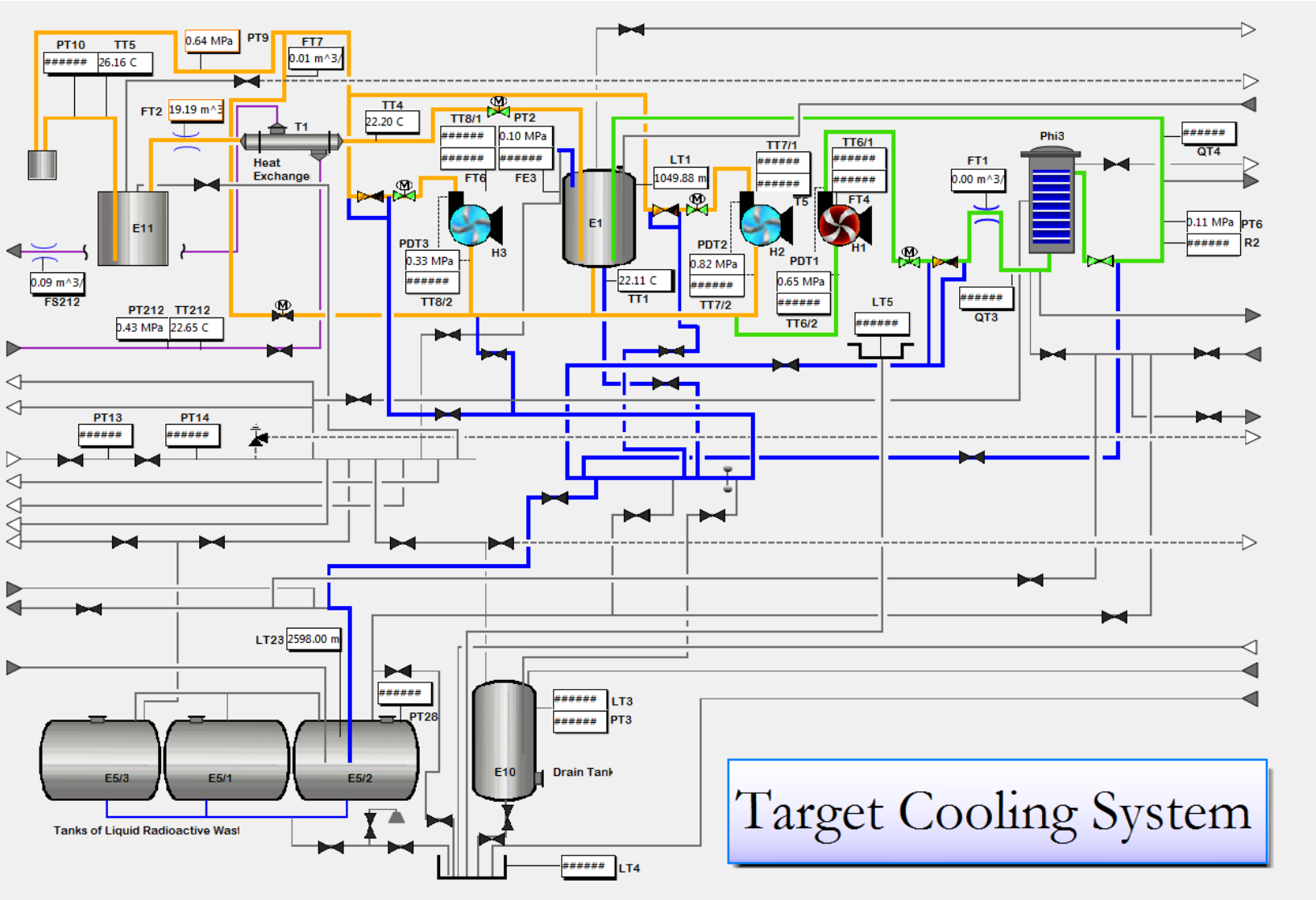

Figure 89. Target cooling system panel

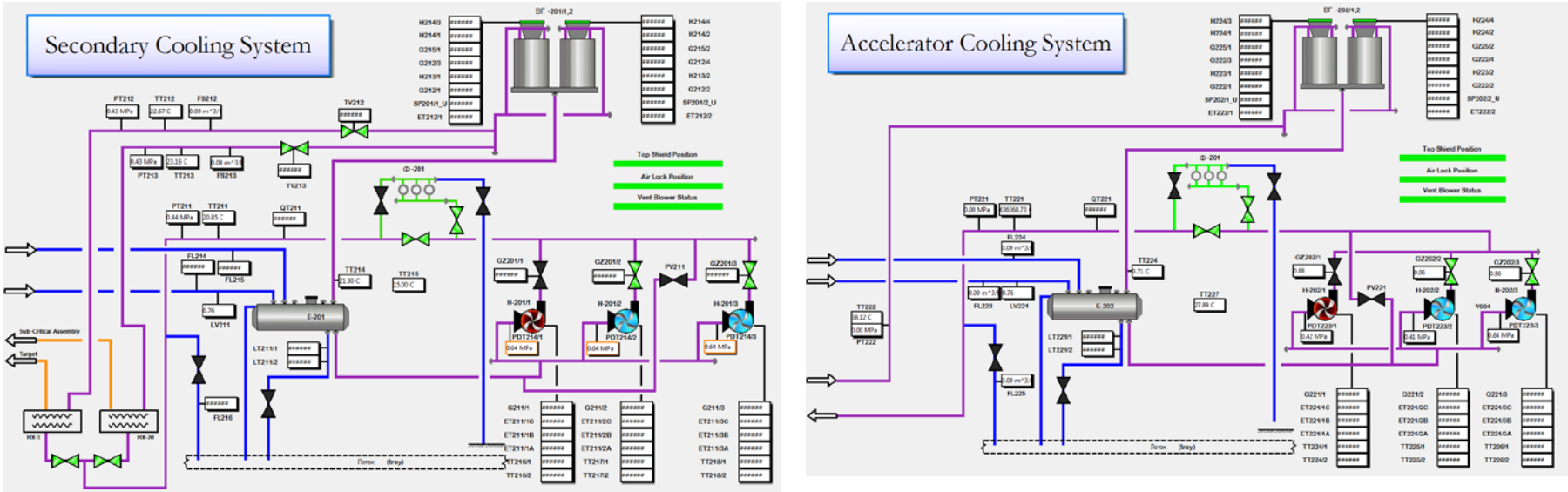

Figure 90. Secondary cooling system panel

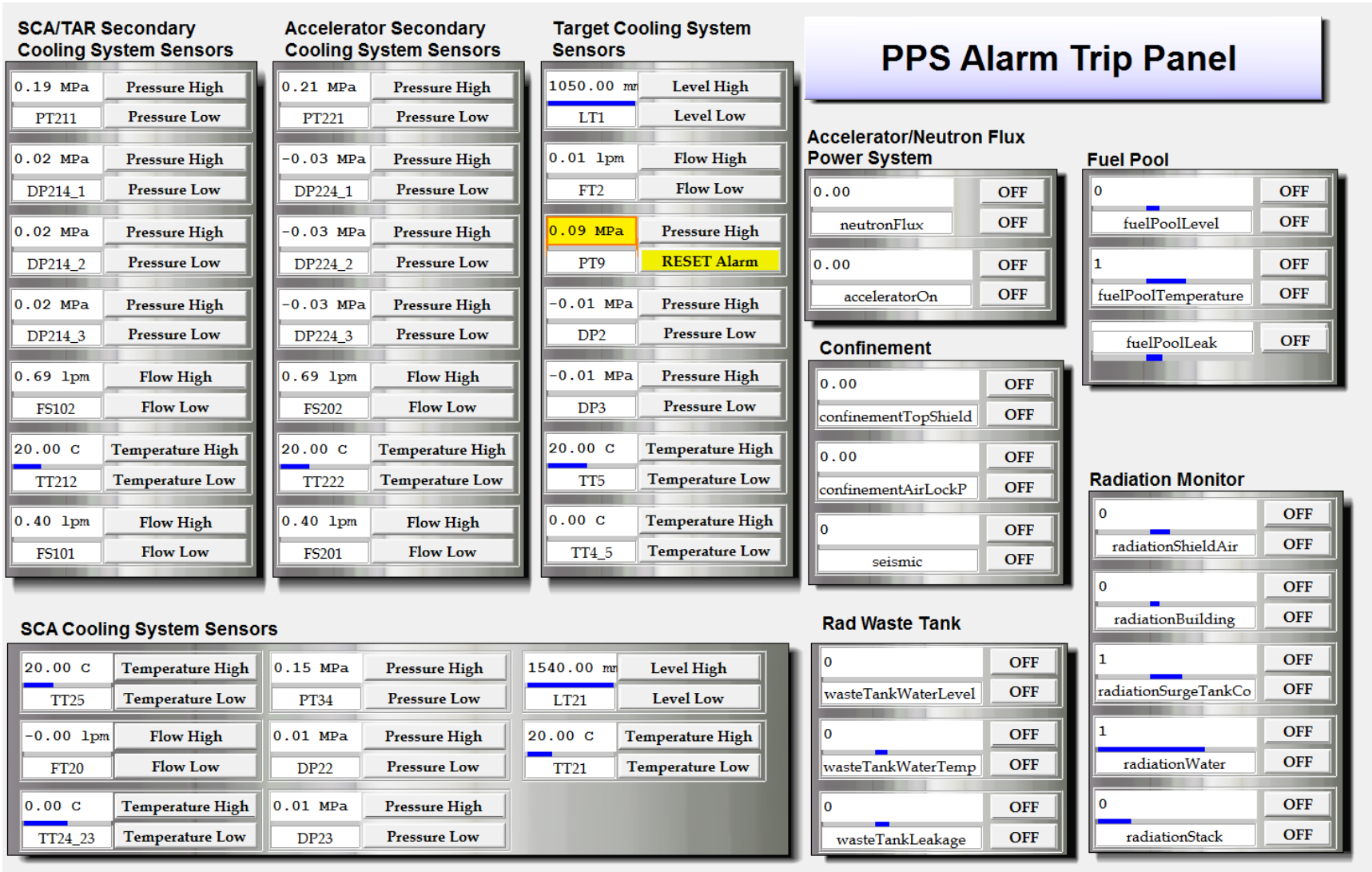

Figure 91. Plant Protection System Panel

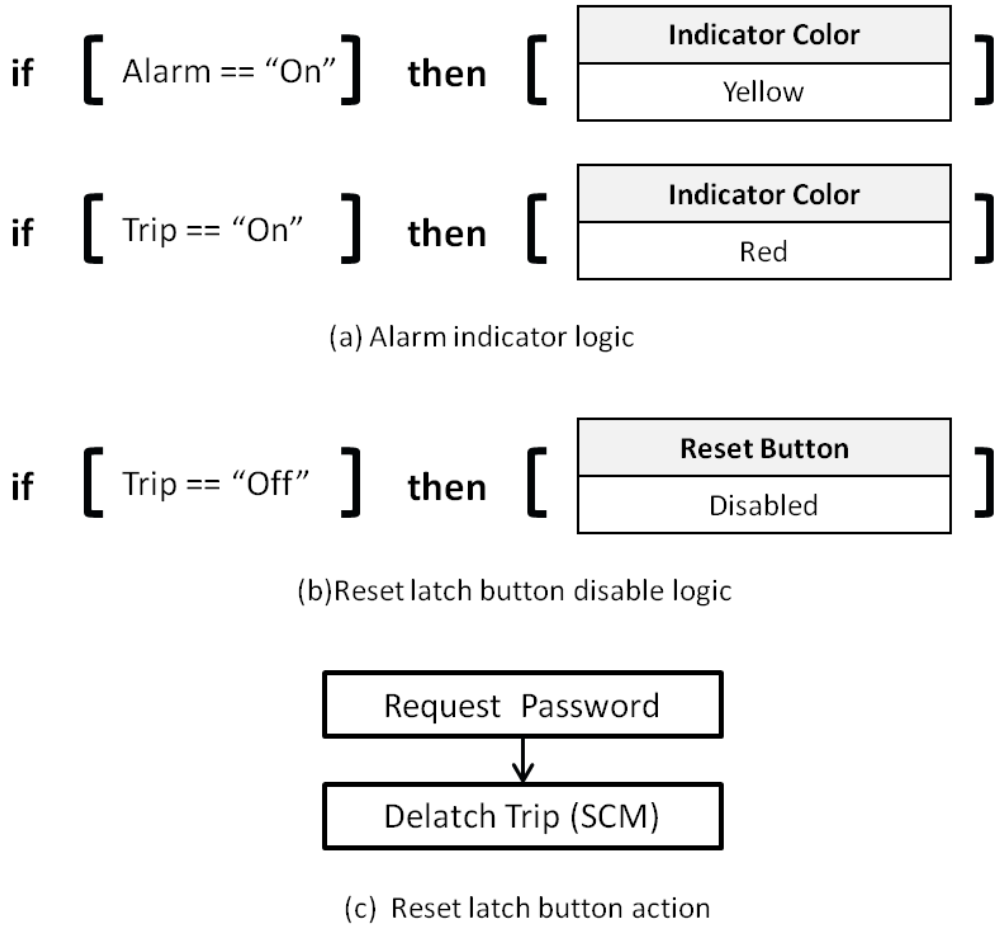

Figure 92. Alarm/Trip button disable logic

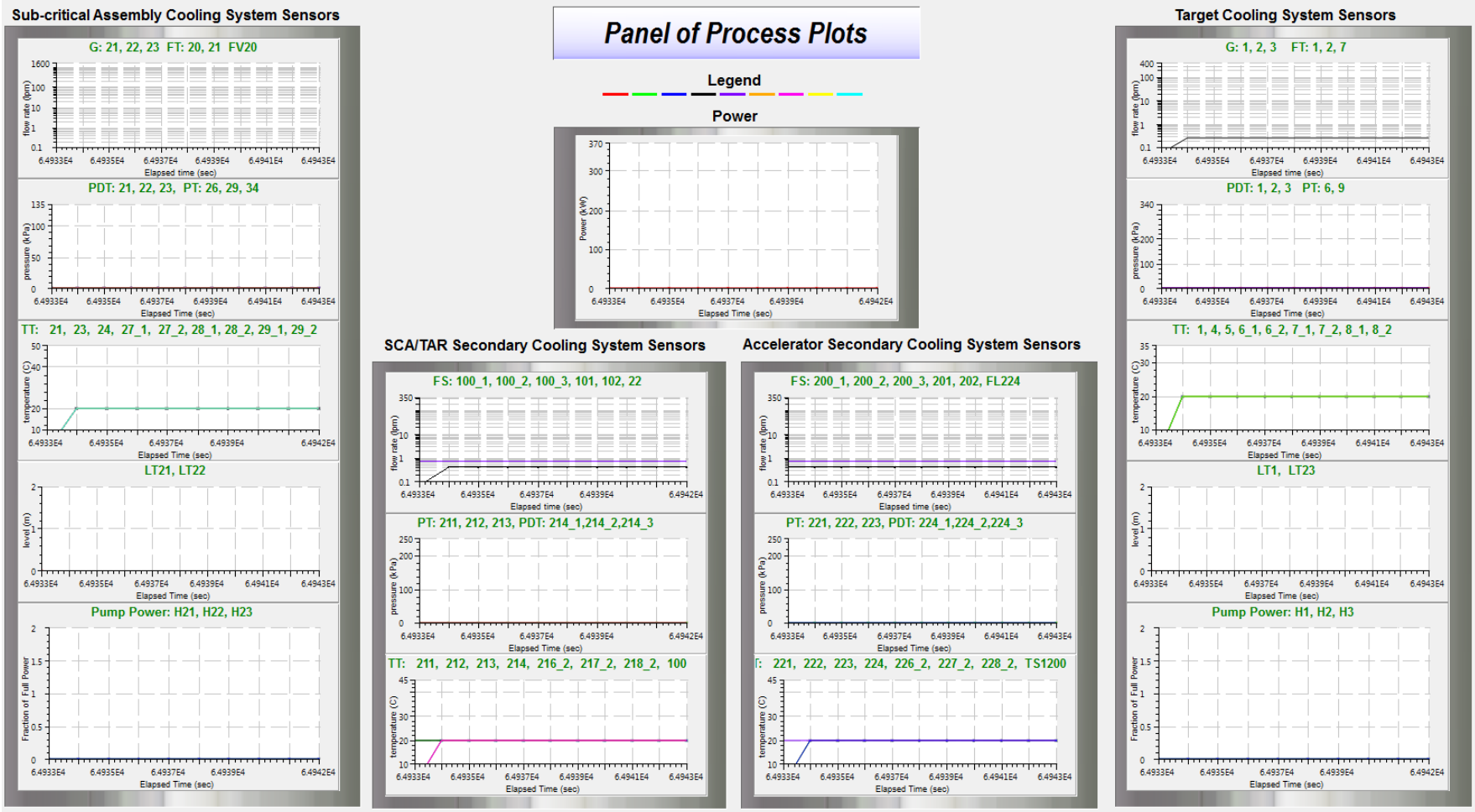

Figure 93. Process Variable Plots Panel

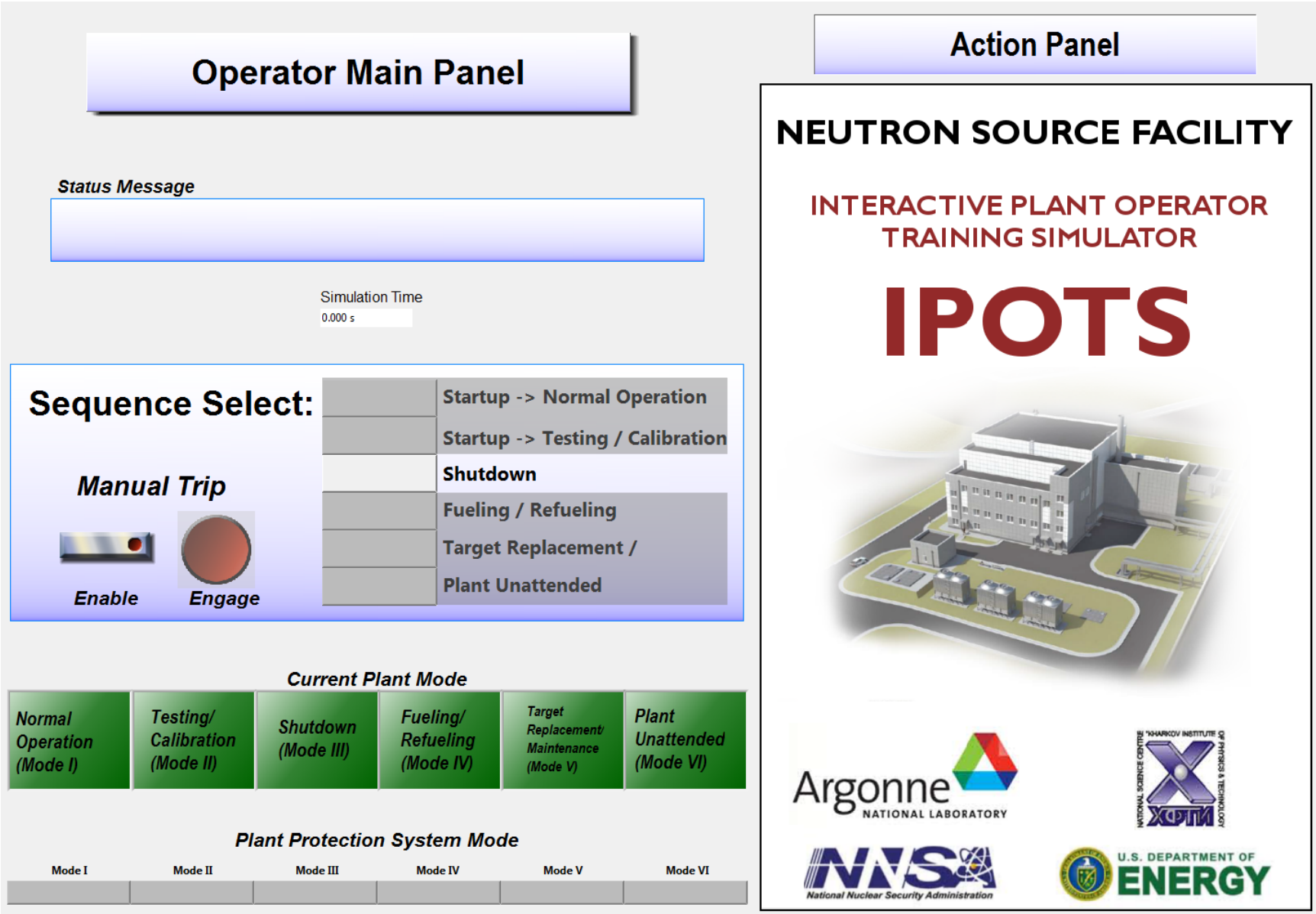

Figure 94. Operator main panel

if

Mode	X
I	1
II	1
III/VI	0
IV	1
V	1

then

Sequence Control	State
Start-up	Disable

if

Mode	X
I	0
II	0
III/VI	1
IV	1
V	1

then

Sequence Control	State
Shutting Down	Disable

if

Mode	X
I	1
II	1
III/VI	0
IV	0
V	1

then

Sequence Control	State
Fueling / Refueling	Disable

if

Mode	X
I	1
II	1
III/VI	0
IV	1
V	0

then

Sequence Control	State
Target Replacement / Maintenance	Disable

Figure 95. Sequence button enable/disable logic

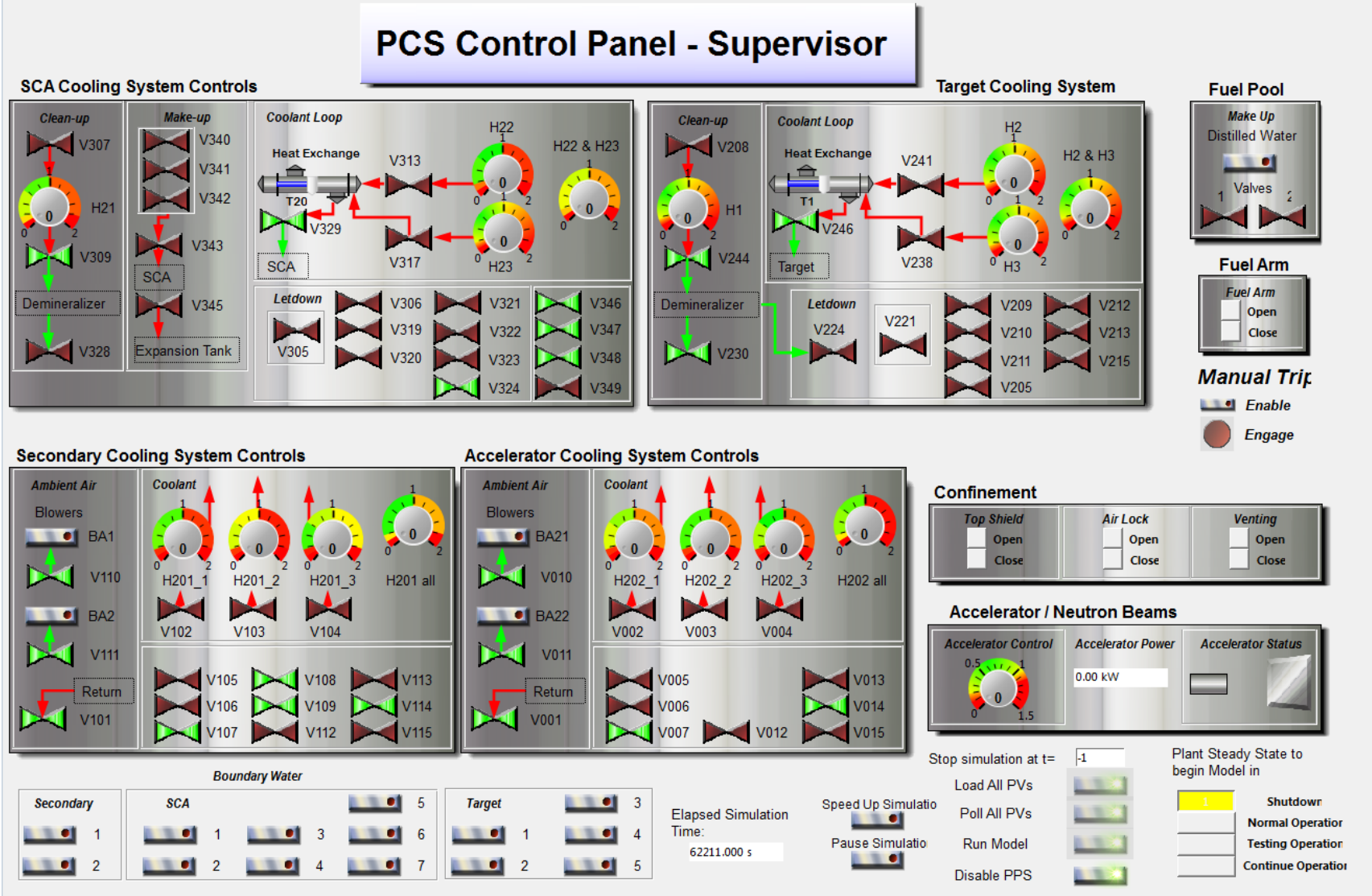

Figure 96. Plant manual control panel

if

Mode	X
I	1
II	0
III/VI	0
IV	0
V	0

then

component	control	State
Target Coolant Pump	"off"	**Disable**
SCA Coolant Pump	"off"	**Disable**
Secondary Coolant Pump	"off"	**Disable**
Air Damp HX Blower	"off"	**Disable**
Target Coolant Valve	"close"	**Disable**
SCA Coolant Valve	"close"	**Disable**
Second Coolant Valve	"close"	**Disable**

if

Mode	X
I	1
II	1
III/VI	0
IV	1
V	0

then

component	control	State
Shield	"open"	**Disable**
Vent Blower	"off"	**Disable**

if

Mode	X
I	0
II	0
III/VI	0
IV	0
V	1

then

component	control	State
Shield	"close"	**Disable**

if

Mode	X
I	0
II	0
III/VI	1
IV	0
V	1

then

component	control	State
Accelerator	"start"	**Disable**

Figure 97. PCS manual control button disable logic

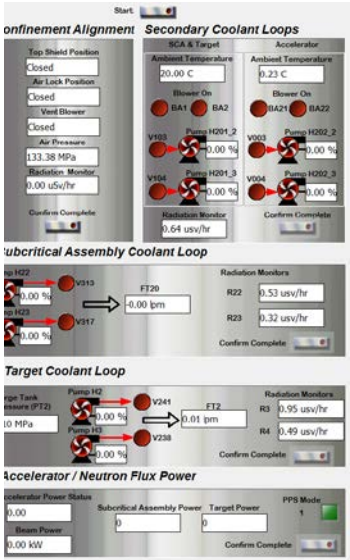

(a) Start-up sequence

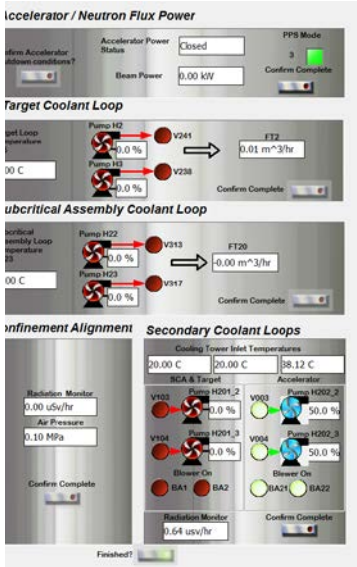

(b) Shutdown sequence

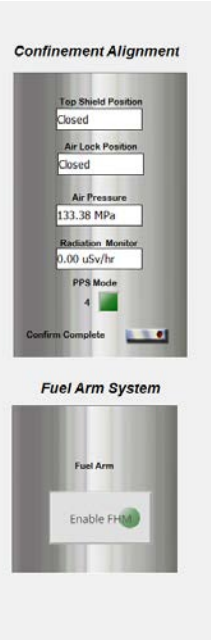

(c) Refueling sequence

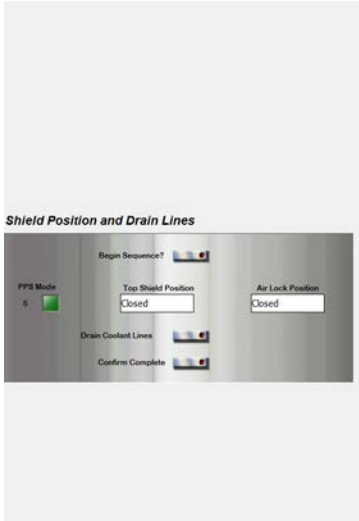

(d) Target replacement

(e) Plant unattended

Figure 98. Automatic sequence panels

if

Mode	X
I	1
II	1
III/VI	0
IV	1
V	1

then

Sequence Control	State
Mode IV Entry	Disable

if

Mode	X
I	1
II	1
III/VI	1
IV	0
V	1

then

Sequence Control	State
Mode IV Exit	Disable

if

Mode	X
I	1
II	1
III/VI	0
IV	1
V	1

then

Sequence Control	State
Mode V Entry	Disable

if

Mode	X
I	1
II	1
III/VI	1
IV	1
V	0

then

Sequence Control	State
Mode V Exit	Disable

Figure 99. Sequencer button disable logic

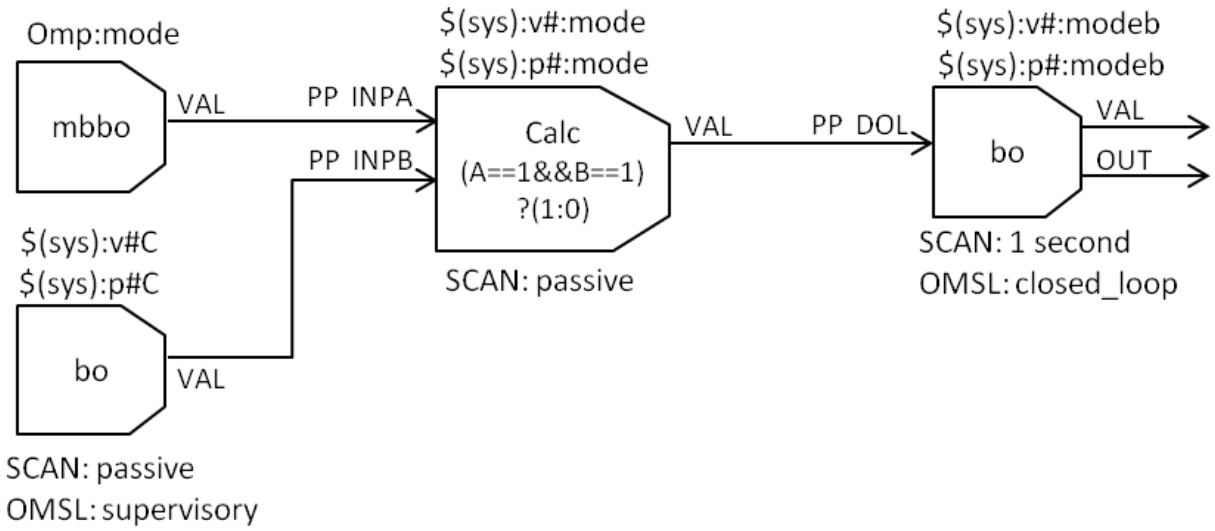

Figure 100. Computation of disable mode command

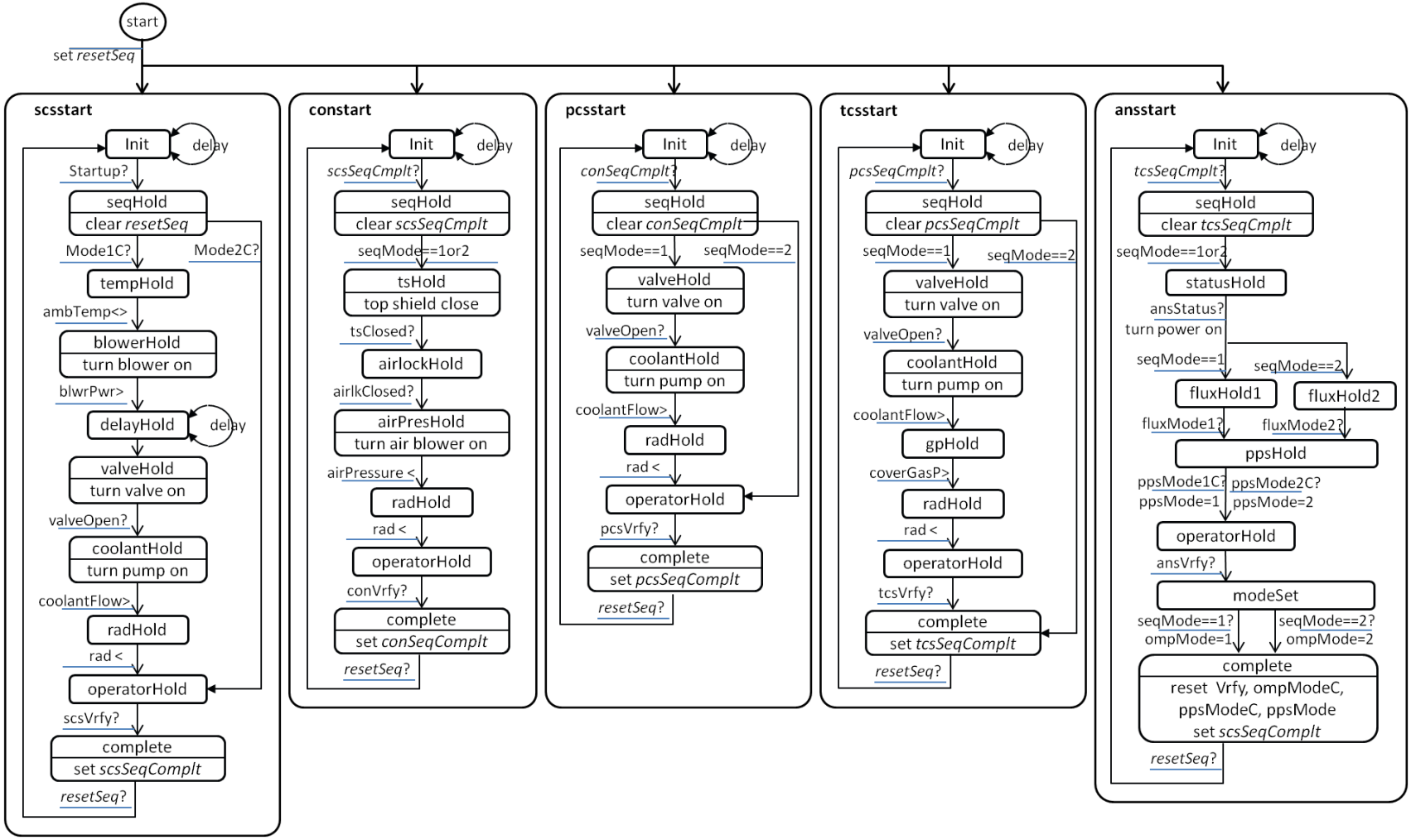

Figure 101. Startup sequence

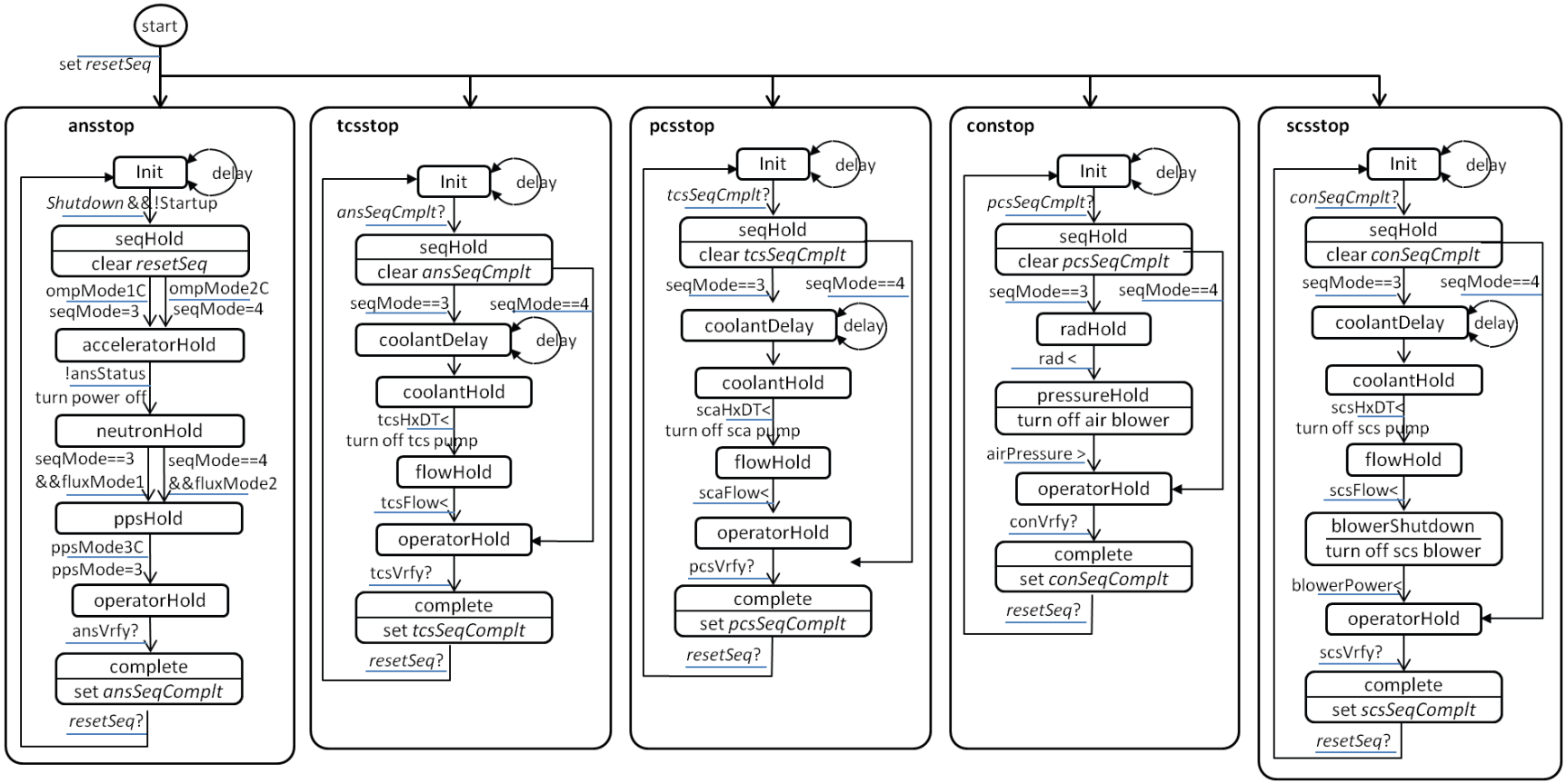

Figure 102. Shutdown sequence

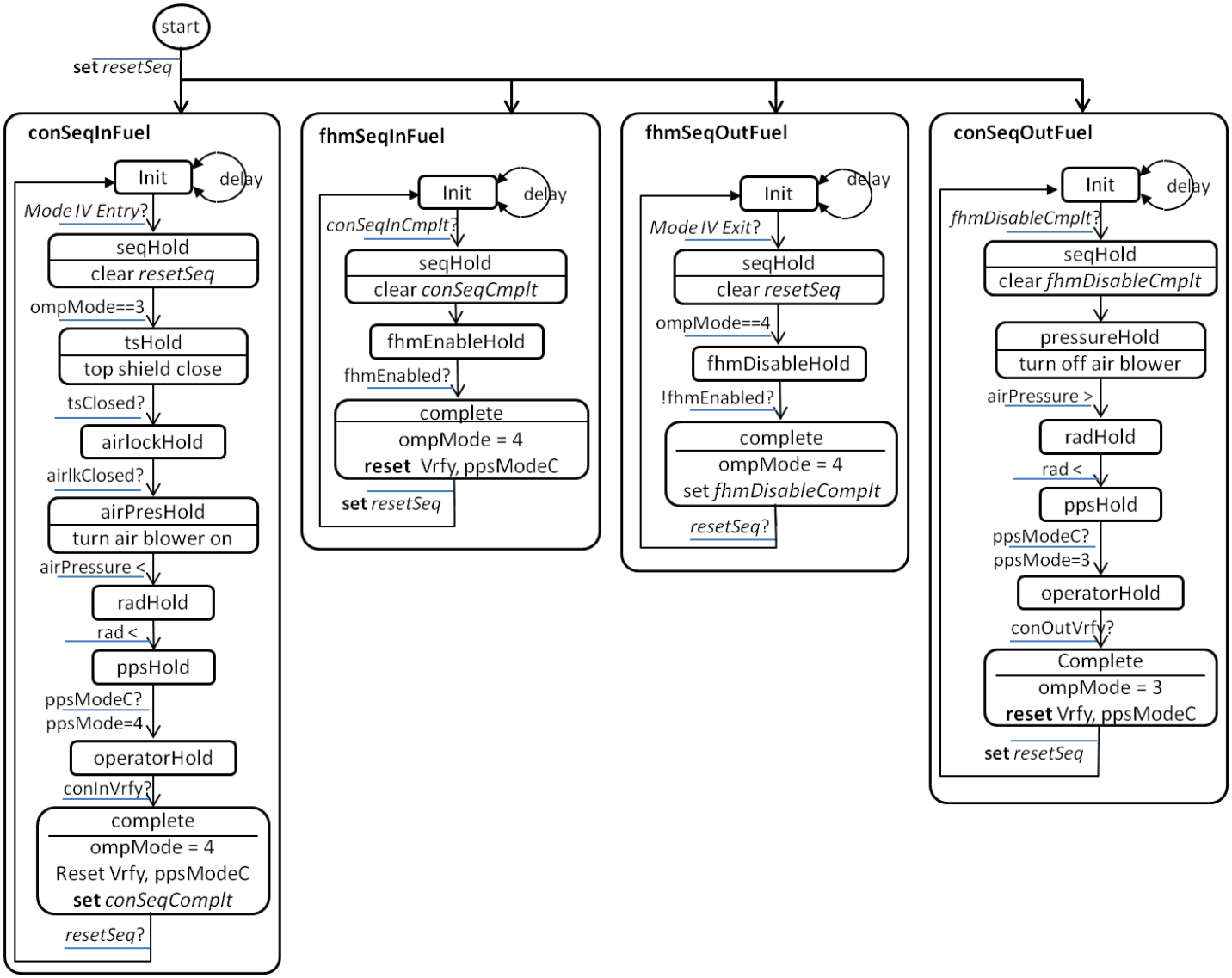

Figure 103. Fueling/refueling sequence

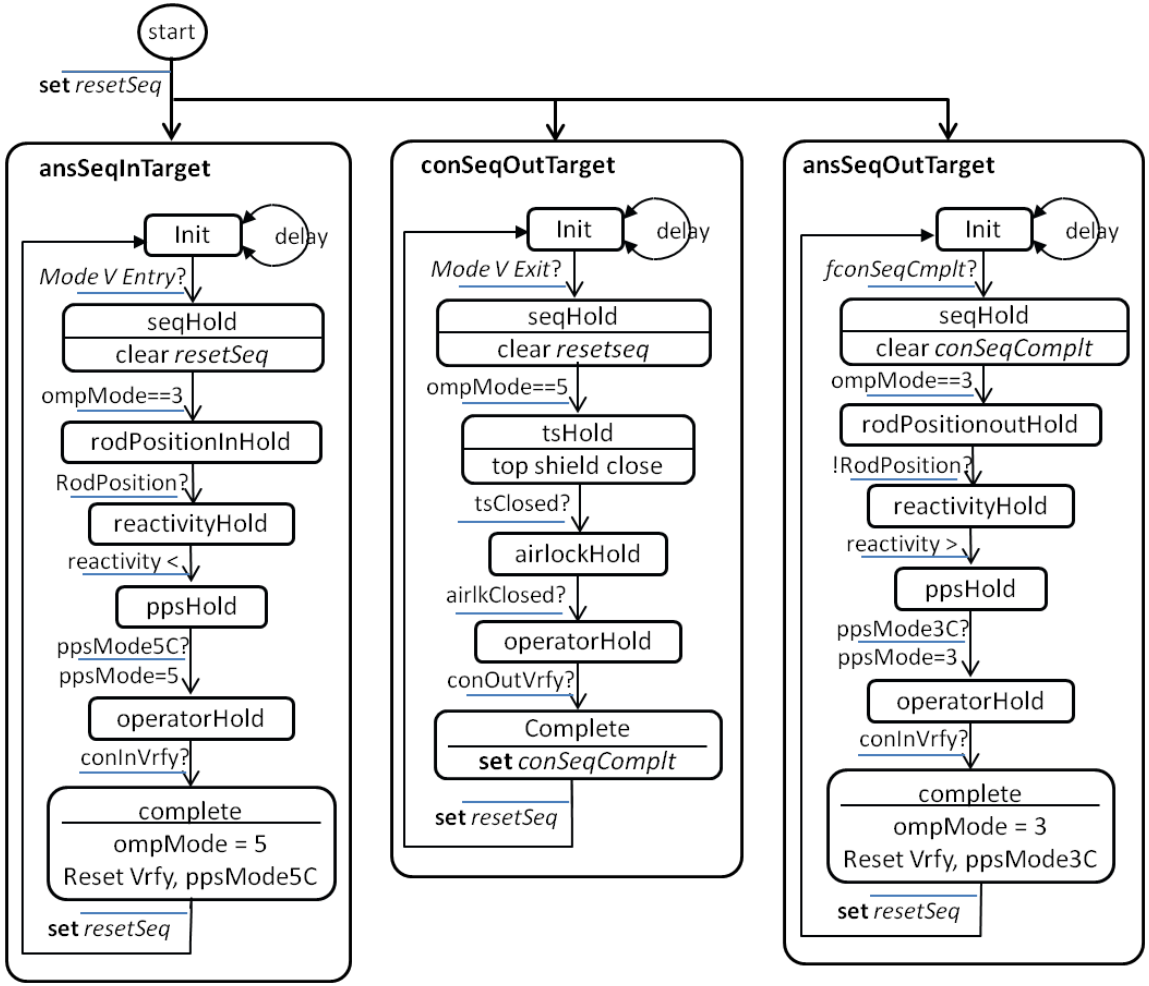

Figure 104. Target replacement/maintenance sequence

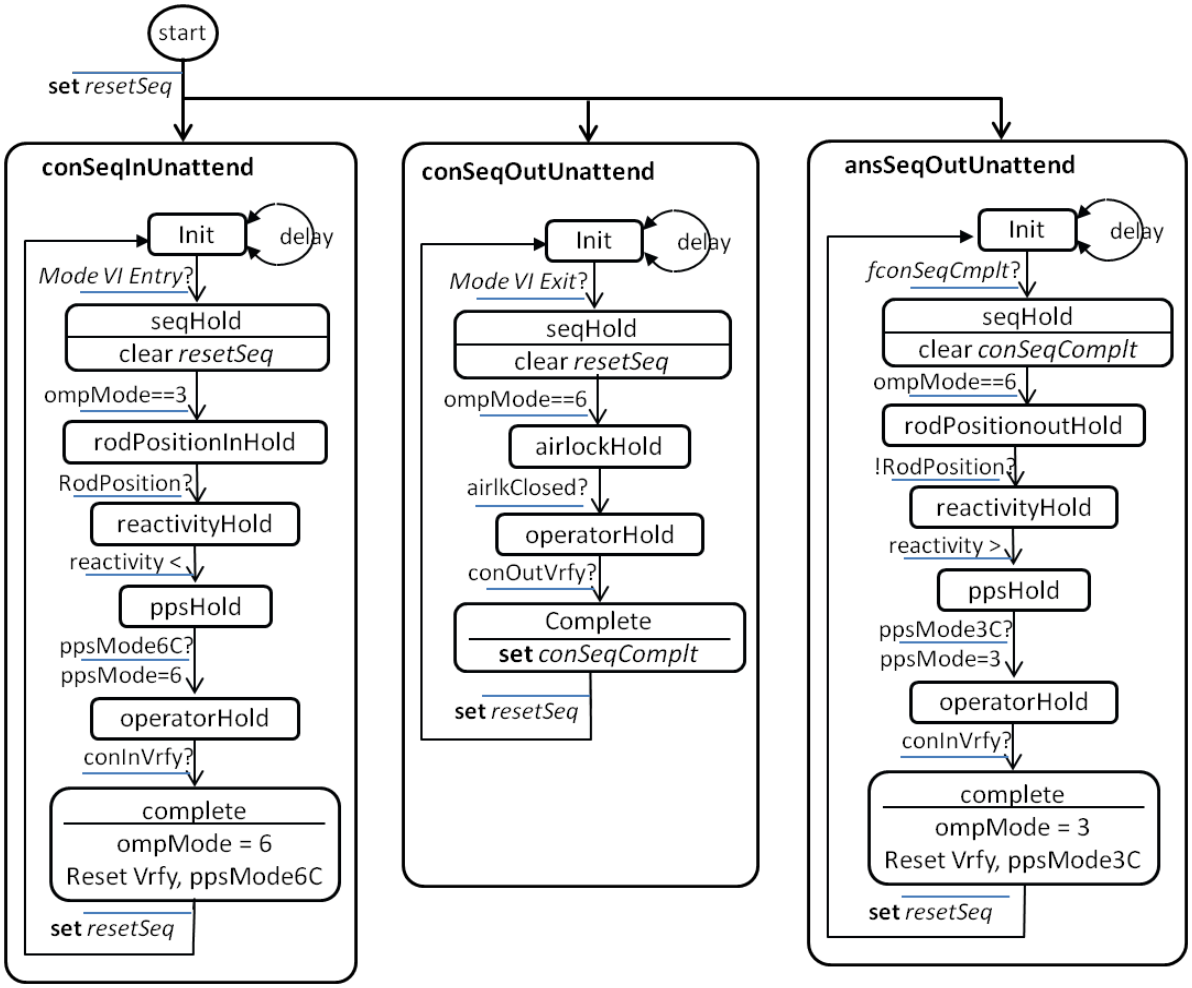

Figure 105. Plant unattended sequence

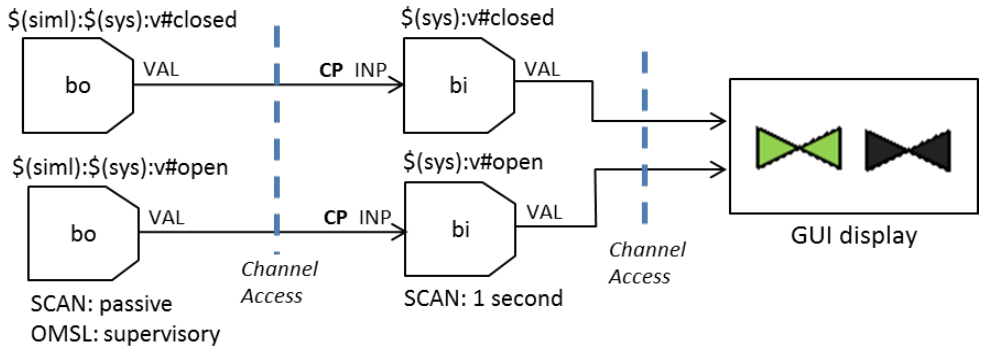

(a) valve status

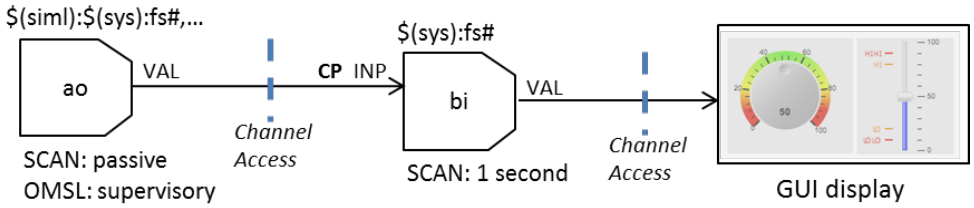

(b) sensor reading

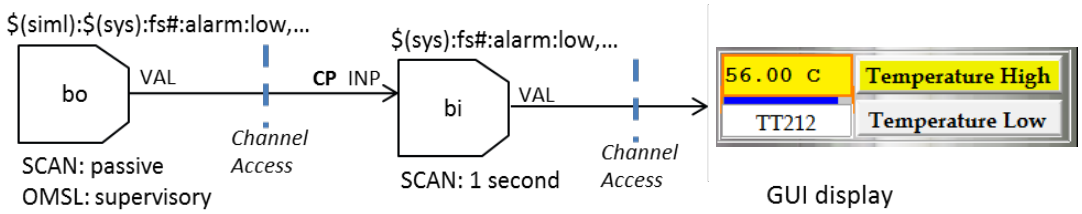

(c) alarm/trip

Figure 106. Soft IOC components connected with the main IOC system components

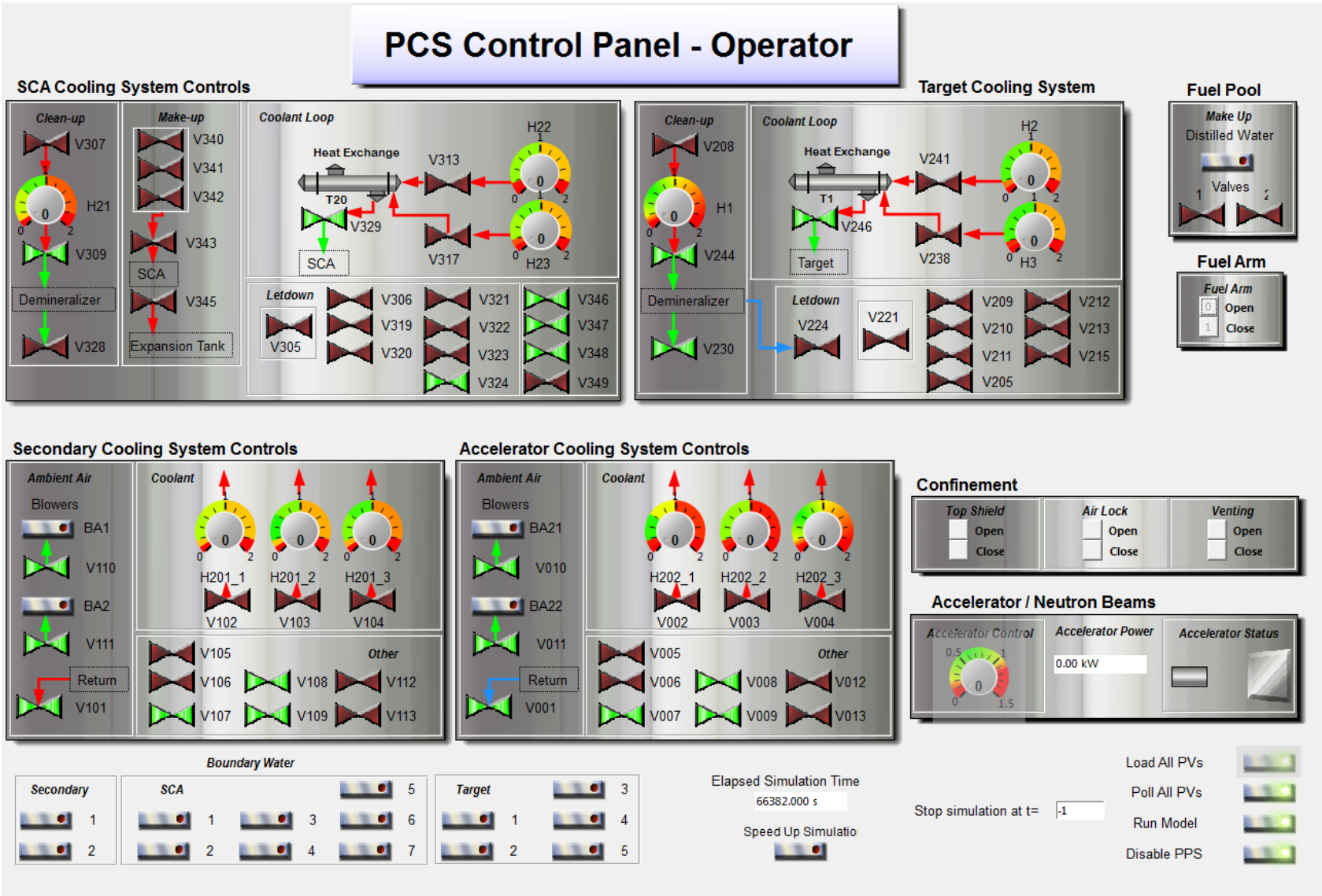

Figure 107. An operator control panel to perform manual test

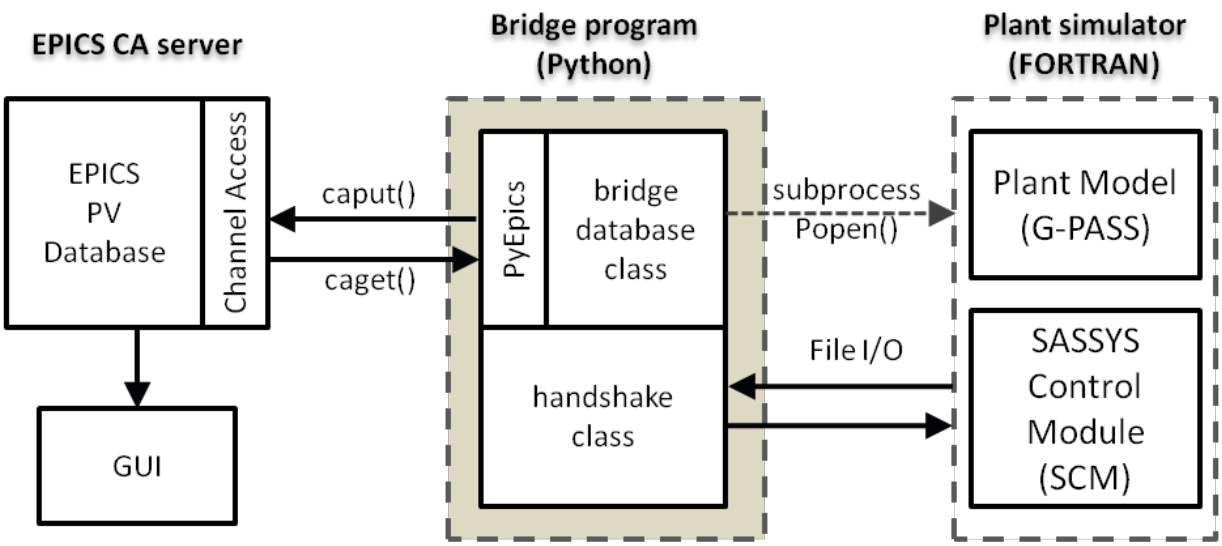

Figure 108. Bridge program to interface EPICS with G-PASS/SCM plant system model

```
self.PVmapping = AssocArray(
    ('Sig3',        'omp:pps:mode1b‘       ),   #pps mode 1 status
    ('Sig1220',     'sca:v53:modeb‘        ),   #v53 mode
    ('Sig1221',     'sca:v53C‘             ),   #v53 manual signal
    ('P7',          'kipt:scs:ps100‘       ),   #ps100 pressure sensor
    ('W8',          'kipt:scs:fs100‘       ),   #fs100 pressure sensor
    ('Q31',         'kipt:ans:targetpower‘ ),   #Target Power
    ('Sig111',      'kipt:sca:ts23:alarm:high'), #SCA Outlet Temp High Alarm
    ('Sig116',      'kipt:sca:ts23:trip:high‘ ), #SCA Outlet Temp High Trip
    ('Sig1242',     'kipt:tcs:v12open‘     ),   #v12 Open State
    ('Sig1243',     'kipt:tcs:v12close‘    ))   #v12 Closed State
```

GPASS/SCM Variable Name — EPICS IOC Database PV Name

Figure 109. Example entries of EPICS – GPASS/SCM variable name mapping

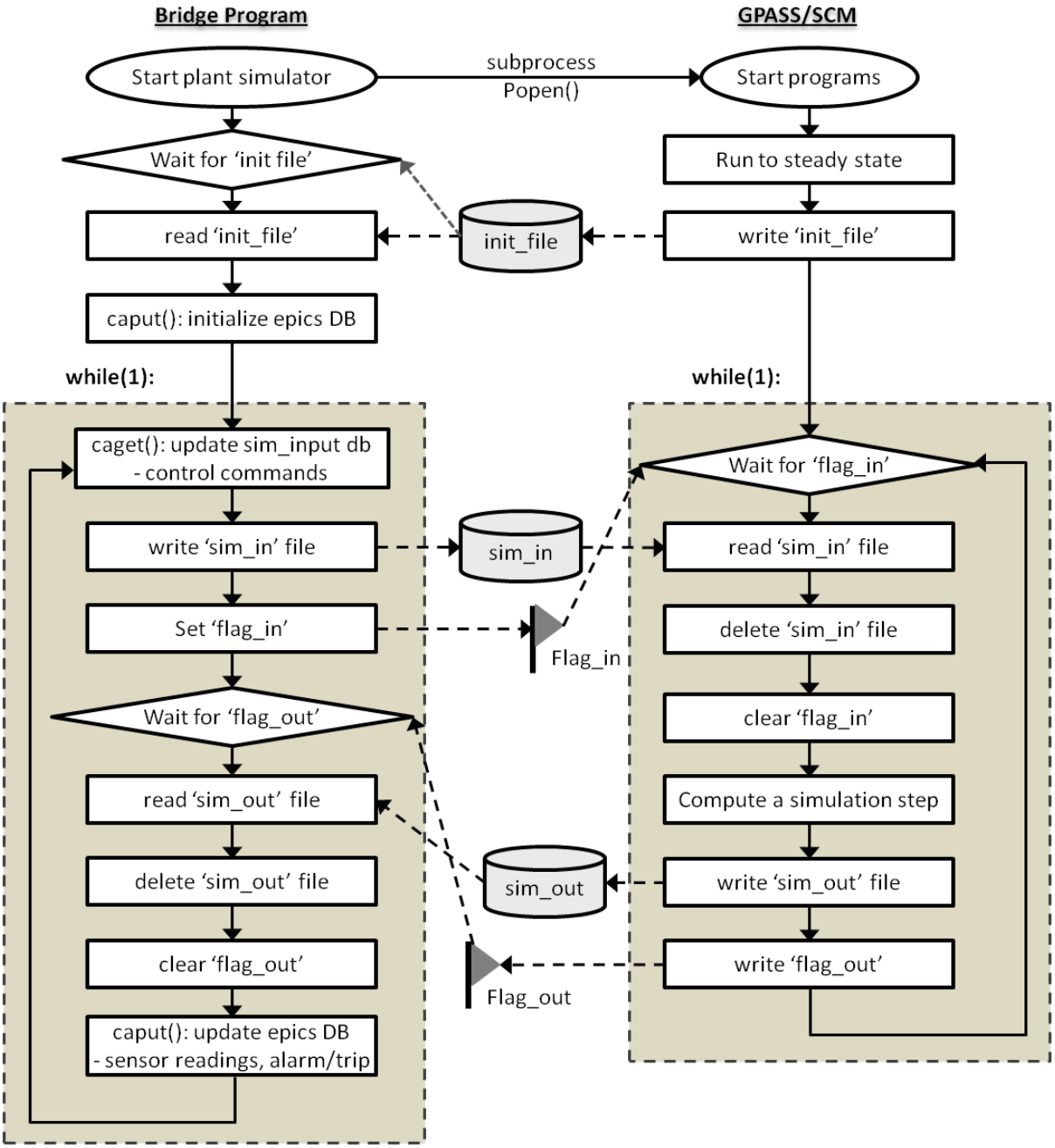

Figure 110. Handshake between bridge program and plant system model

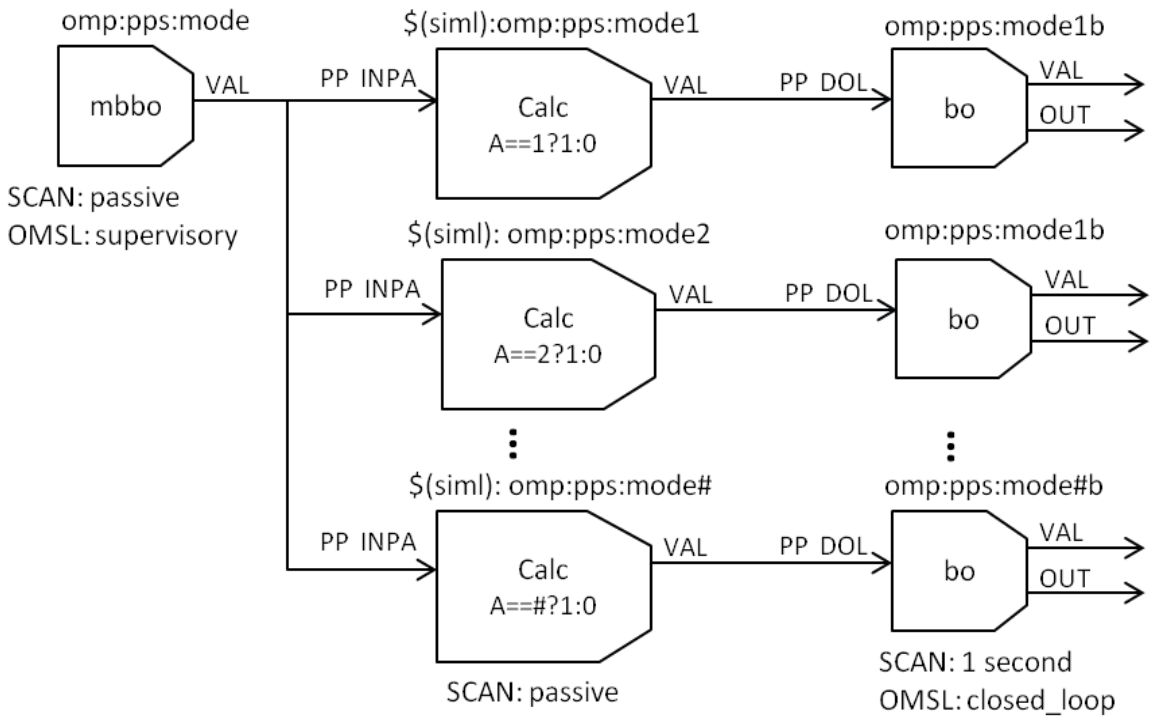

Figure 111. Linked database to determine the individual PPS modes

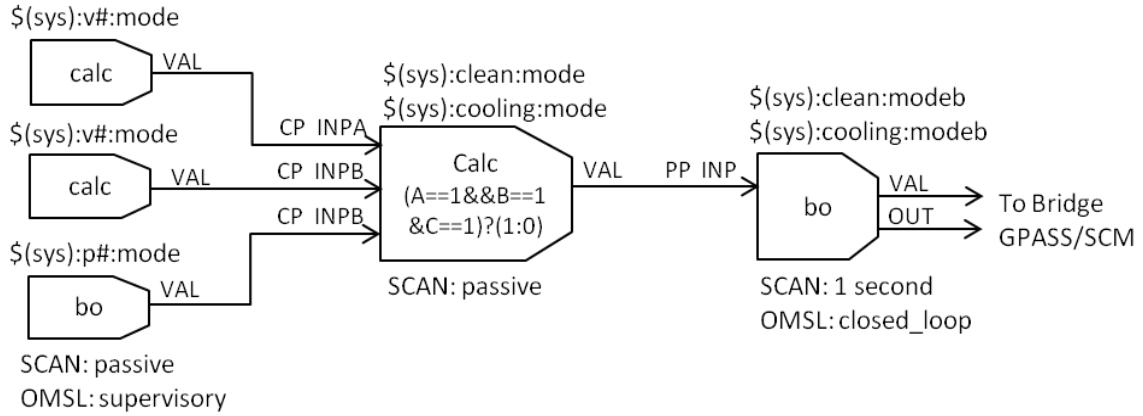

Figure 112. Linked database to determine the disable modes of the combined variables

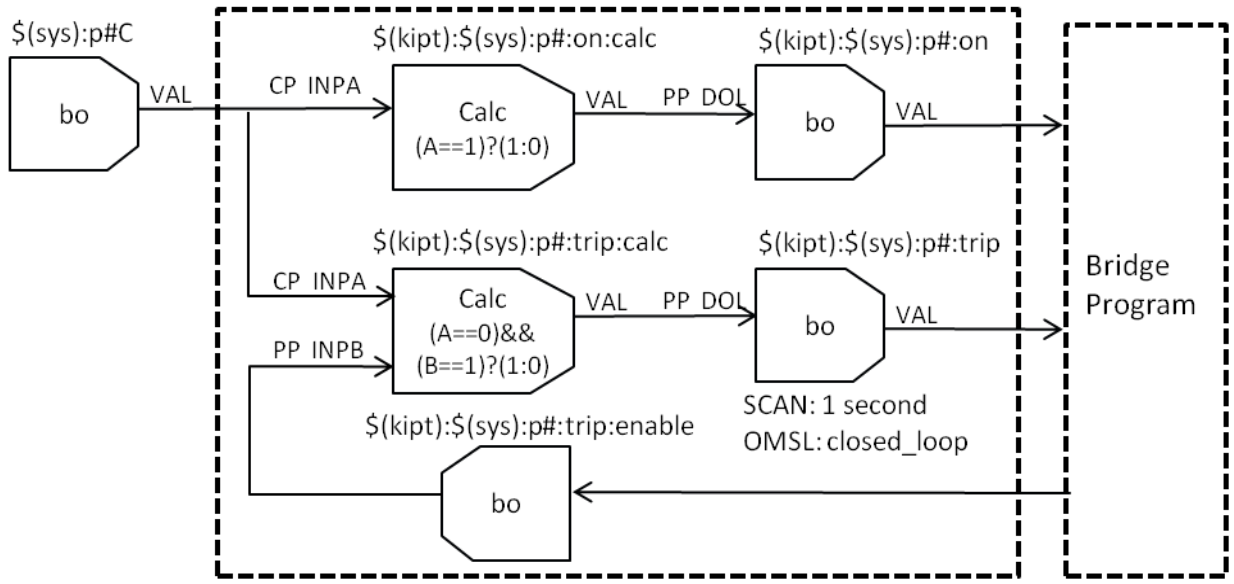

Figure 113. Database logic to split control inputs

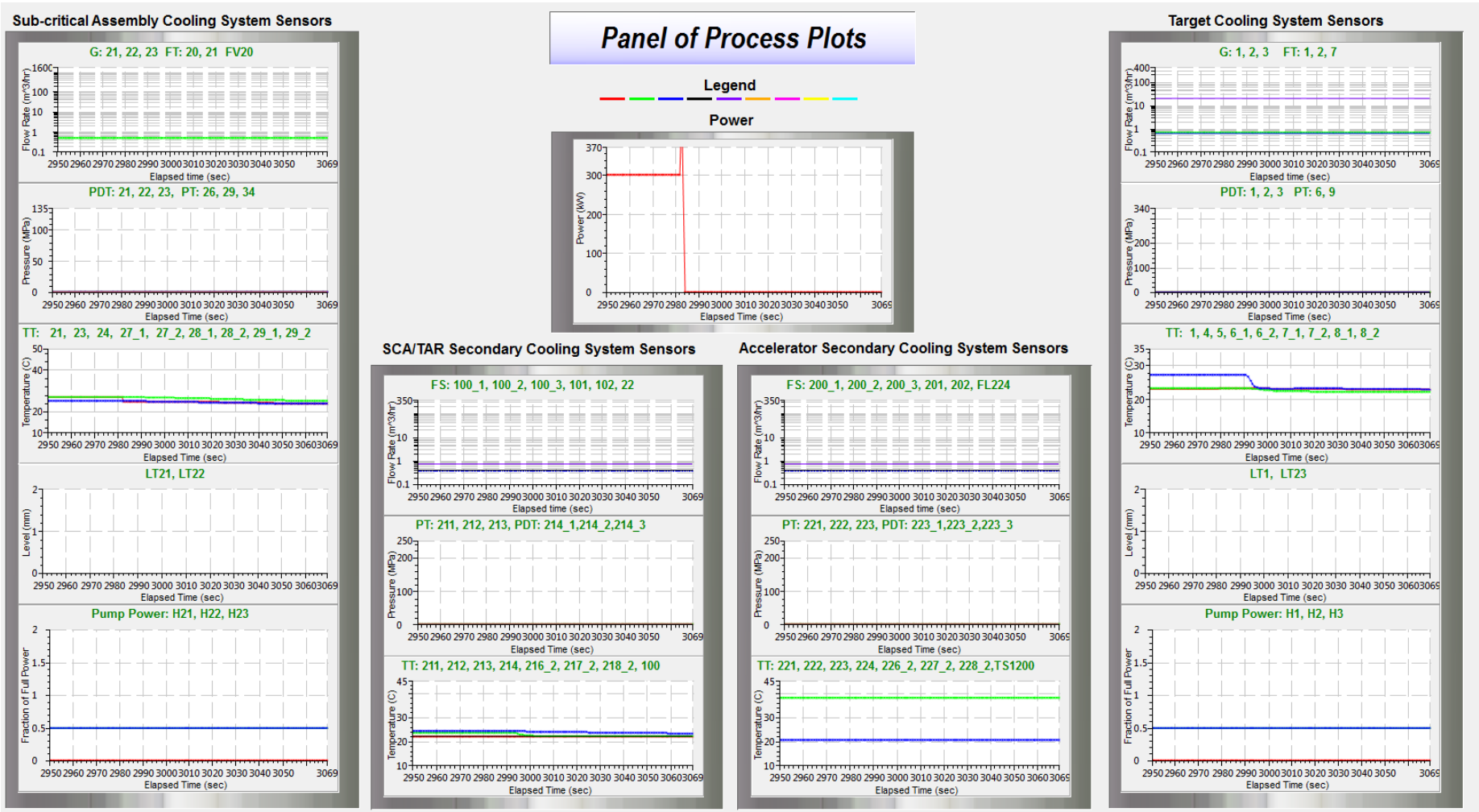

Figure 114. Accelerator power trip

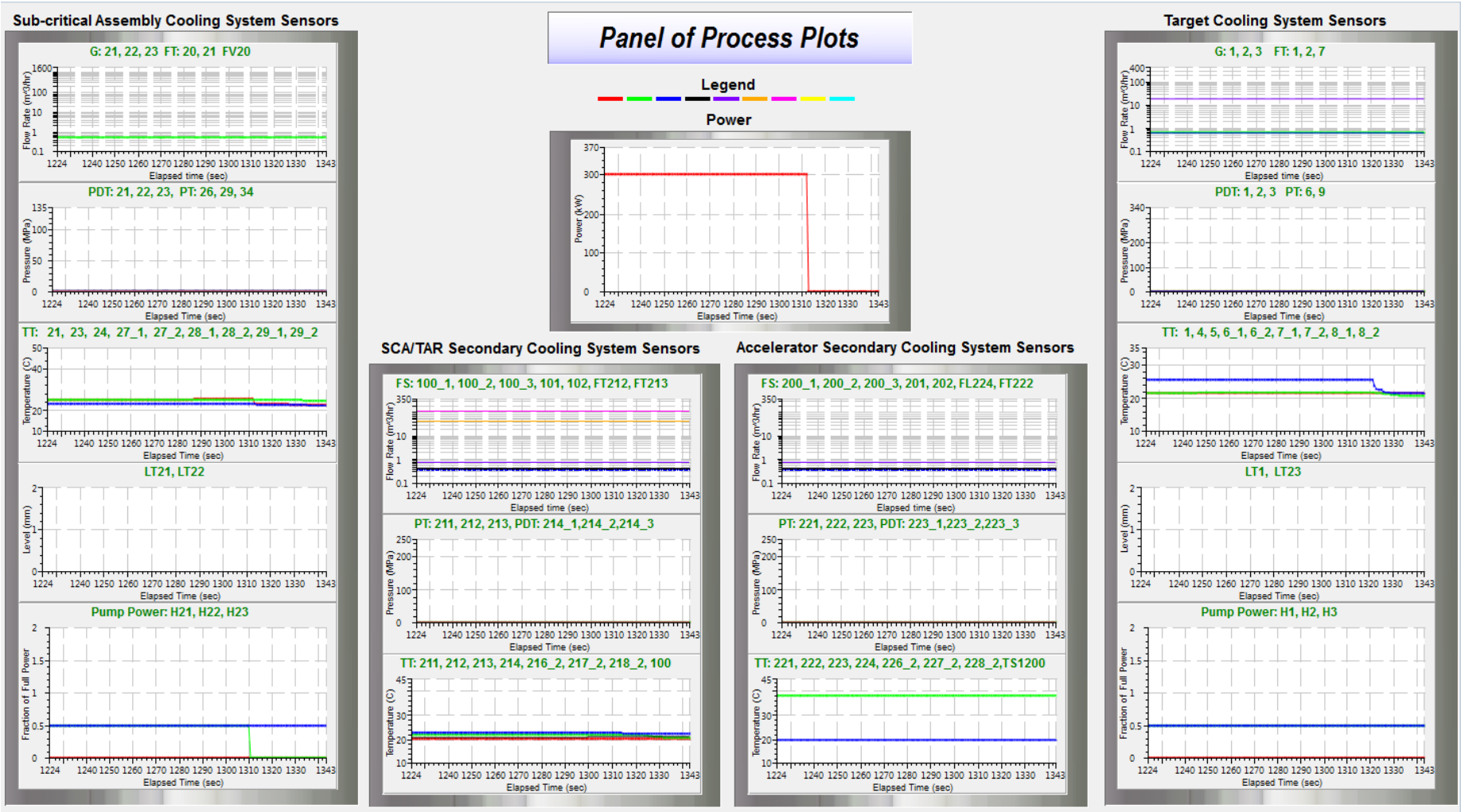

Figure 115. SCA coolant pump trip

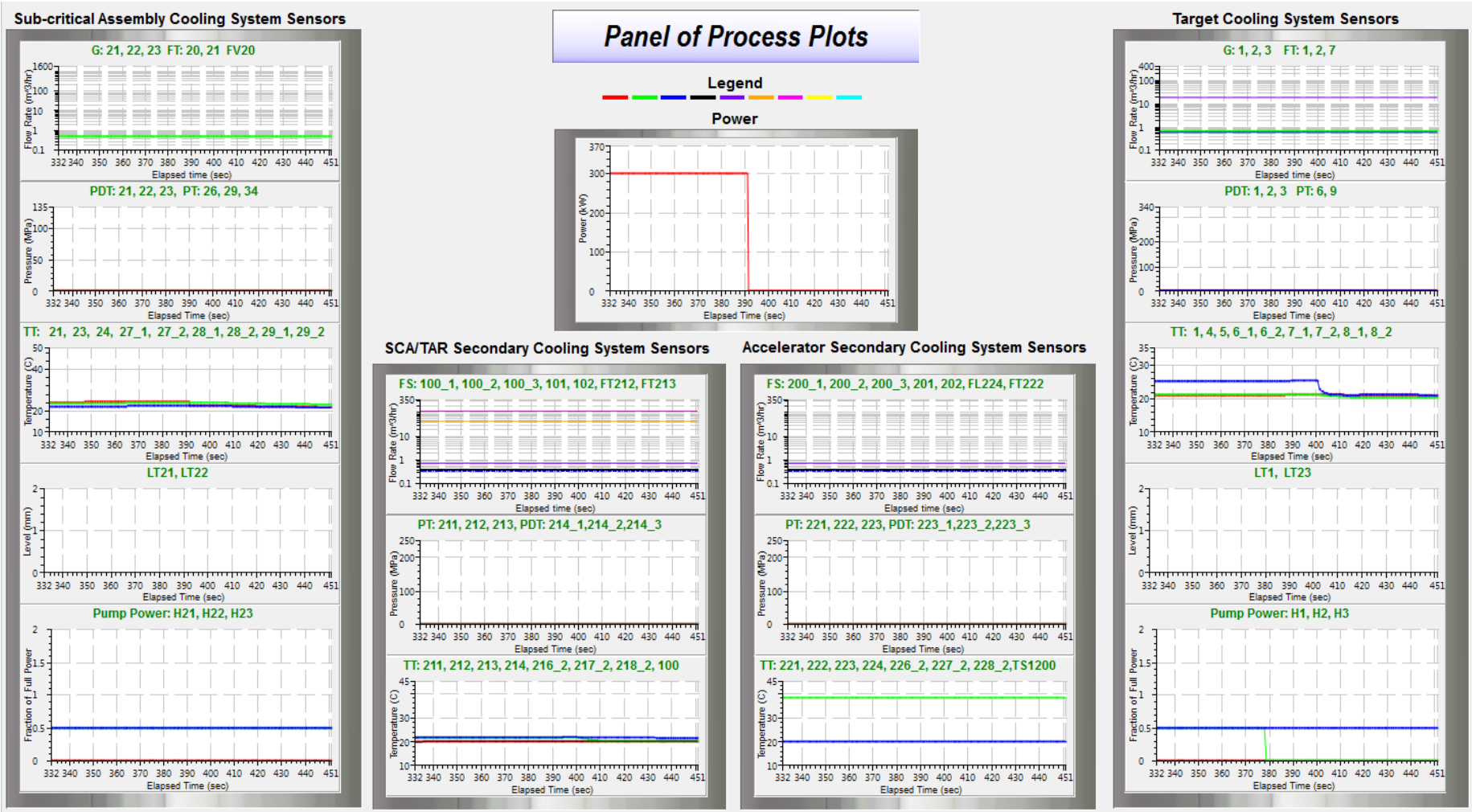

Figure 116. Target coolant pump trip

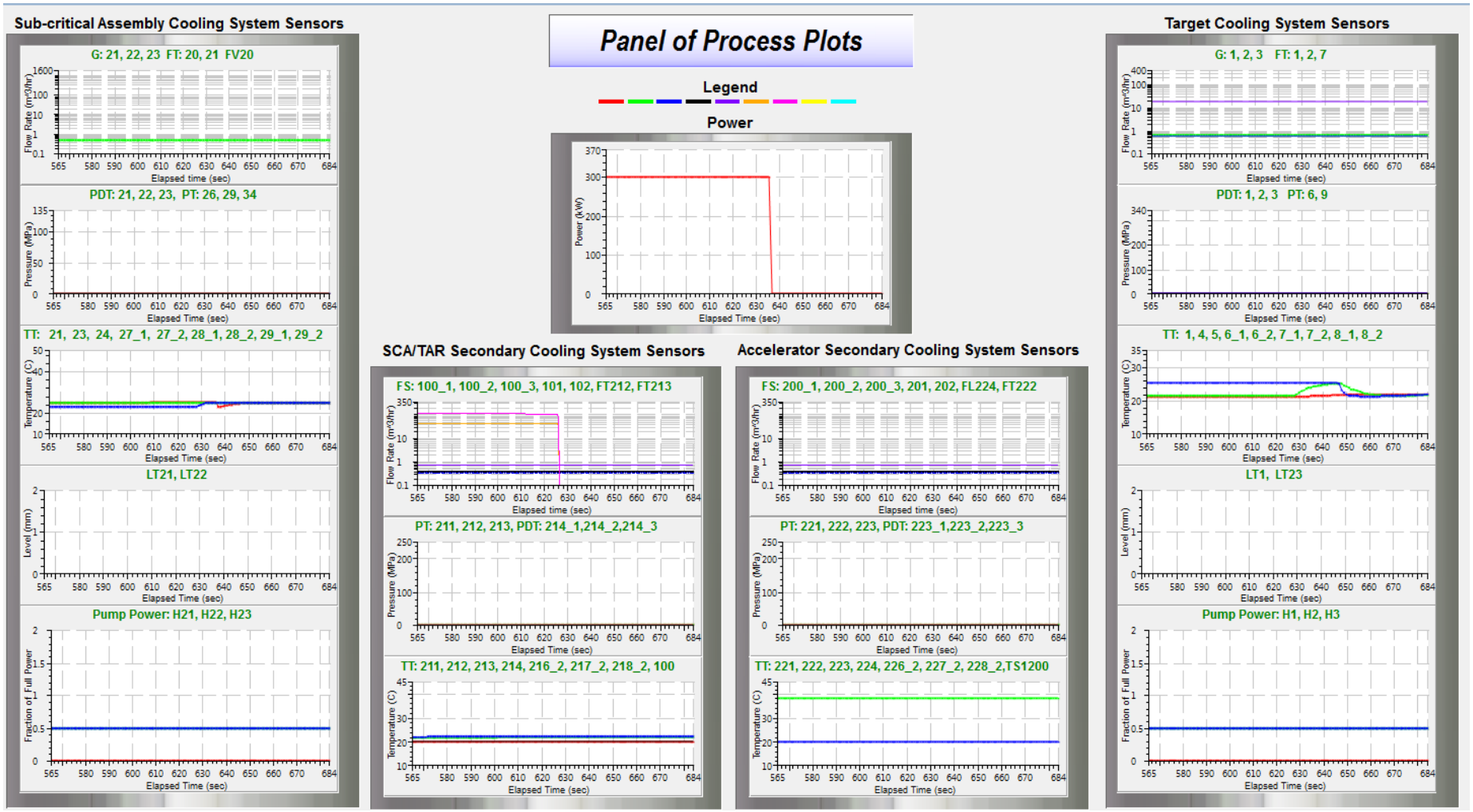

Figure 117. Secondary coolant pump trip

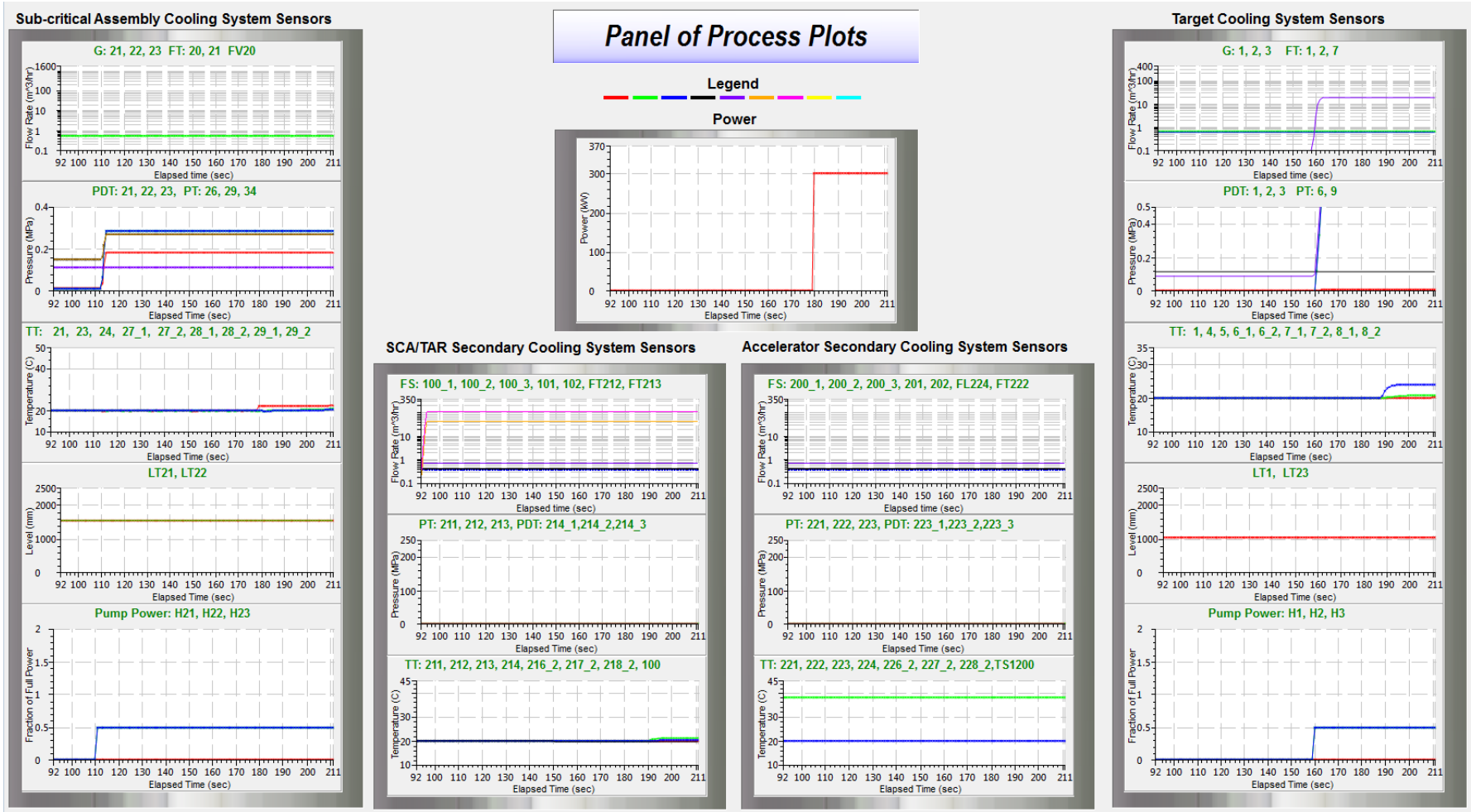
Panel of Process Plots
Legend
Power
Sub-critical Assembly Cooling System Sensors
G: 21, 22, 23 FT: 20, 21 FV20
PDT: 21, 22, 23, PT: 26, 29, 34
TT: 21, 23, 24, 27_1, 27_2, 28_1, 28_2, 29_1, 29_2
LT21, LT22
Pump Power: H21, H22, H23
SCA/TAR Secondary Cooling System Sensors
FS: 100_1, 100_2, 100_3, 101, 102, FT212, FT213
PT: 211, 212, 213, PDT: 214_1,214_2,214_3
TT: 211, 212, 213, 214, 216_2, 217_2, 218_2, 100
Accelerator Secondary Cooling System Sensors
FS: 200_1, 200_2, 200_3, 201, 202, FL224, FT222
PT: 221, 222, 223, PDT: 223_1,223_2,223_3
TT: 221, 222, 223, 224, 226_2, 227_2, 228_2,TS1200
Target Cooling System Sensors
G: 1, 2, 3 FT: 1, 2, 7
PDT: 1, 2, 3 PT: 6, 9
TT: 1, 4, 5, 6_1, 6_2, 7_1, 7_2, 8_1, 8_2
LT1, LT23
Pump Power: H1, H2, H3
Elapsed Time (sec)

(a) Operating

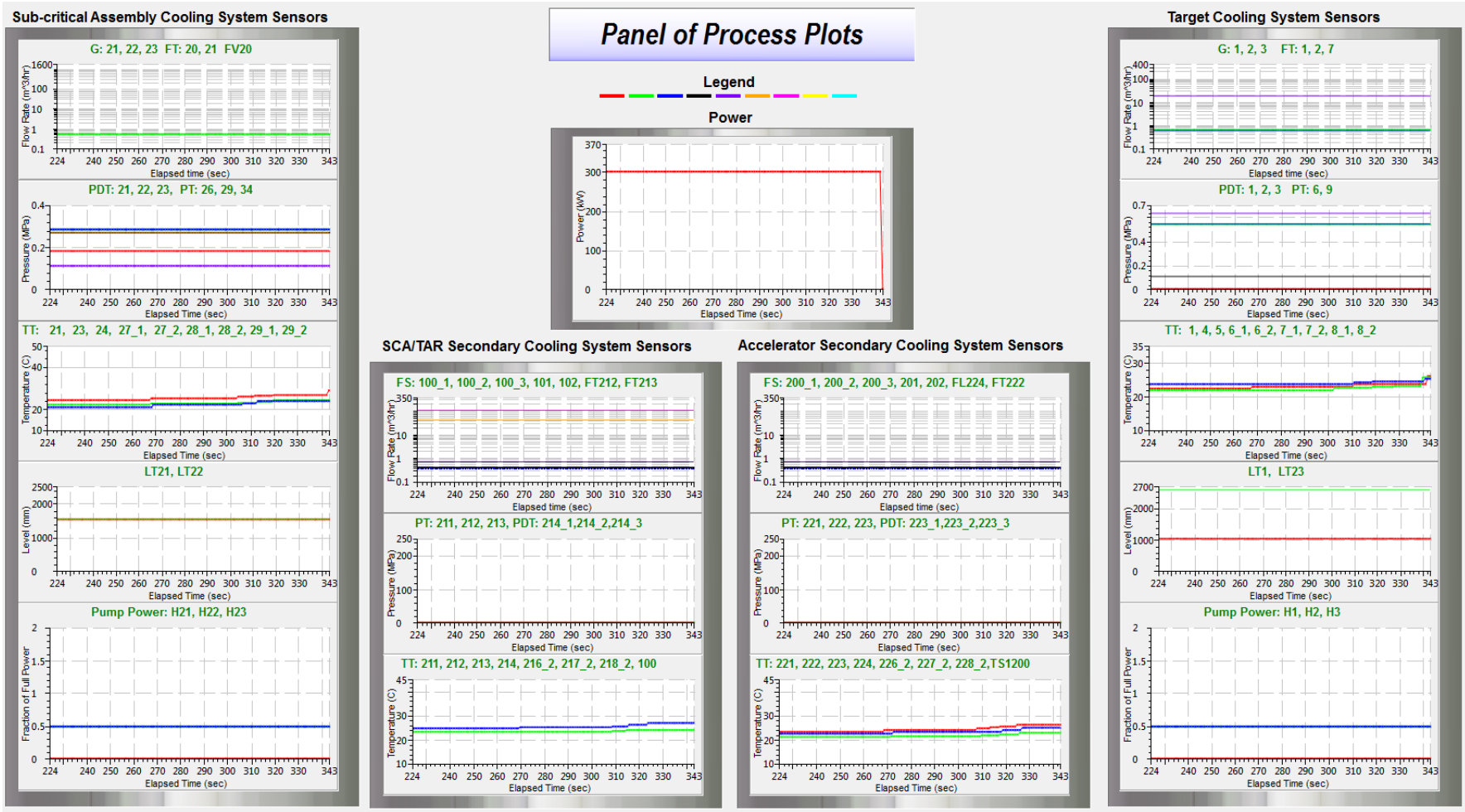

(b) Power tripped

Figure 118. Blowers shut off with eventual Plant Trip following

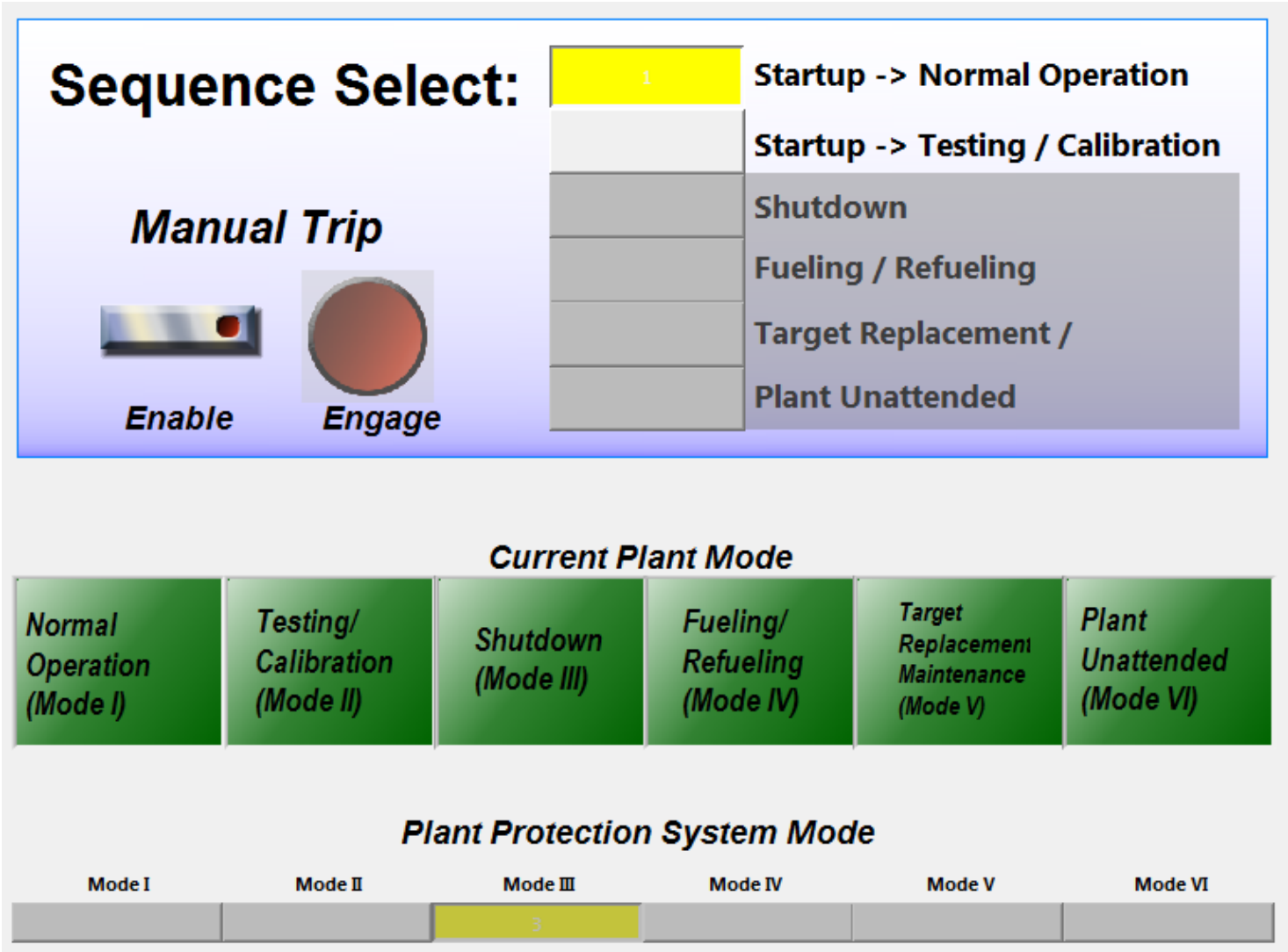

Figure 119. Start-up sequence invoked from operator main panel

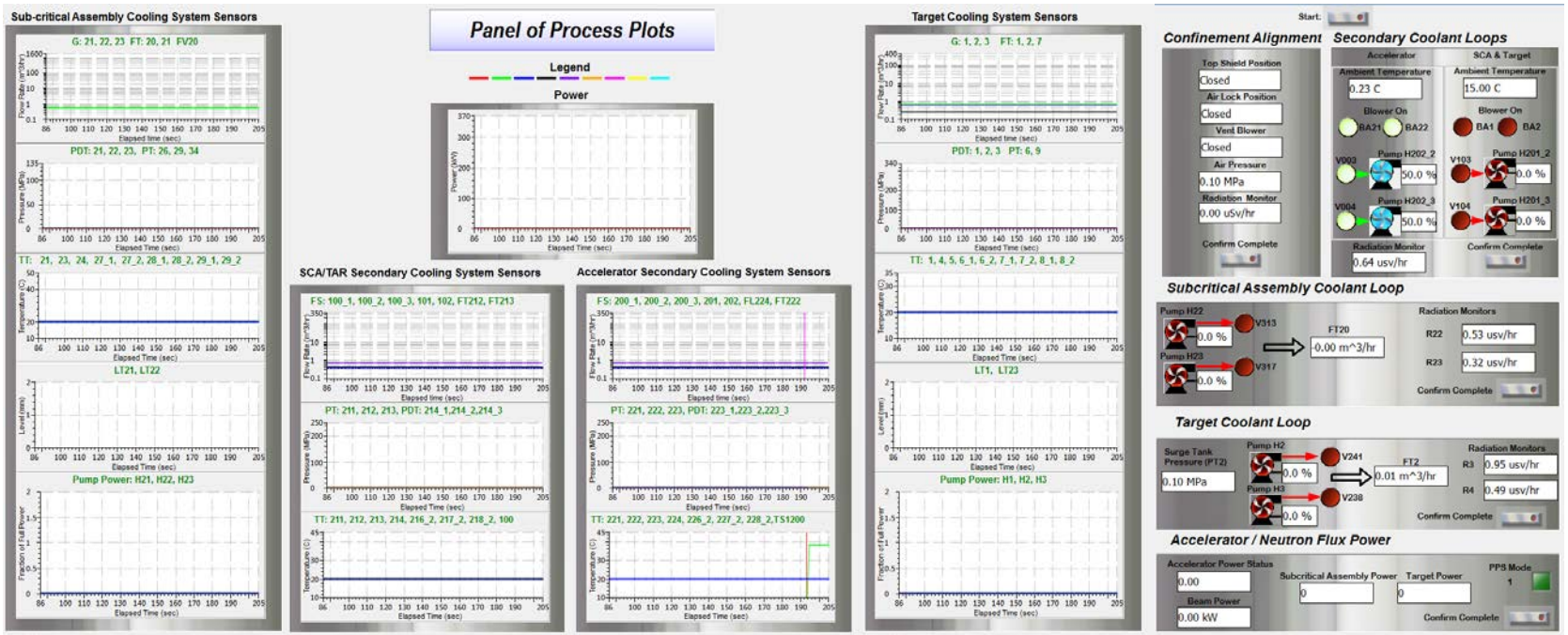

(a) Accelerator Secondary coolant system pumps turned on

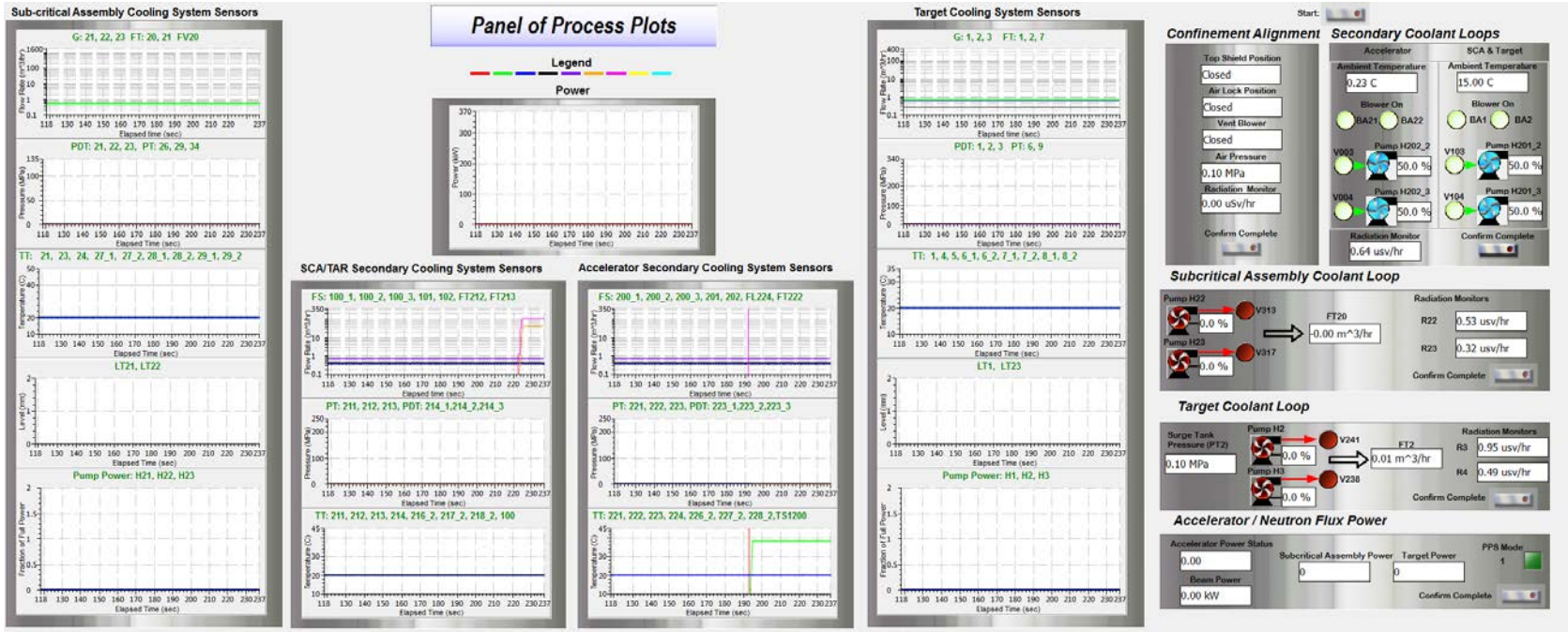

(b) Secondary coolant pump turned on

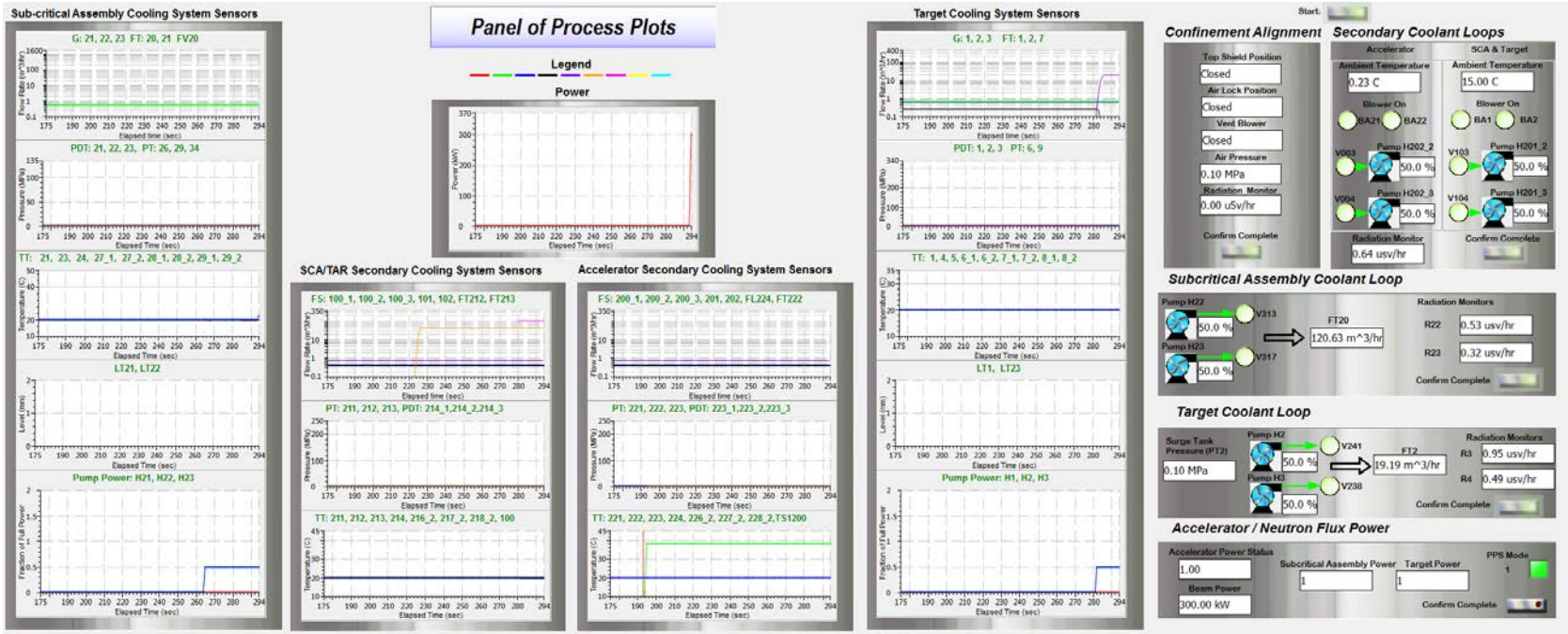

(c) Accelerator power turned on

Figure 120. Start-up sequence

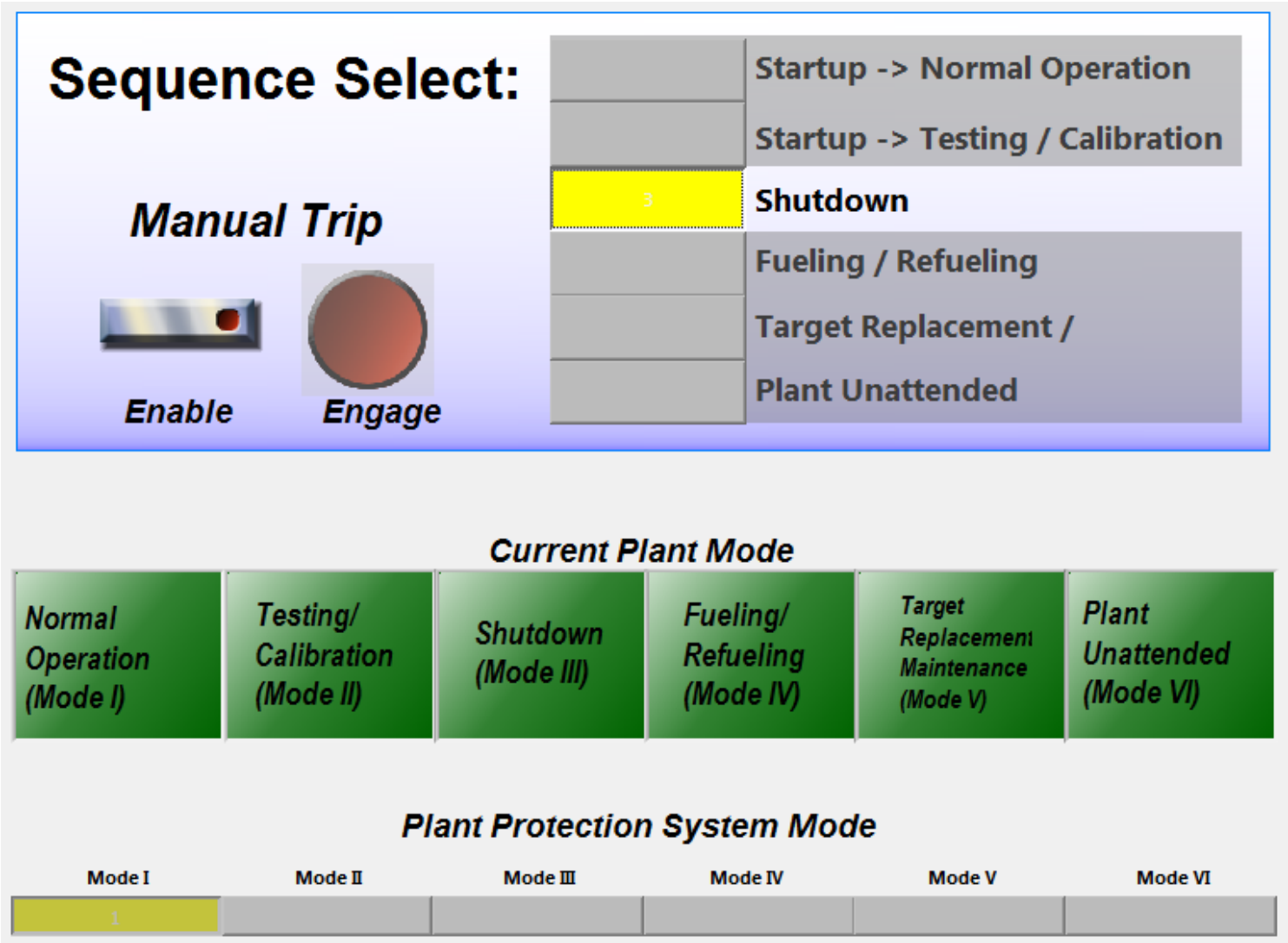

Figure 121. Shutdown sequence invoked from operator main panel

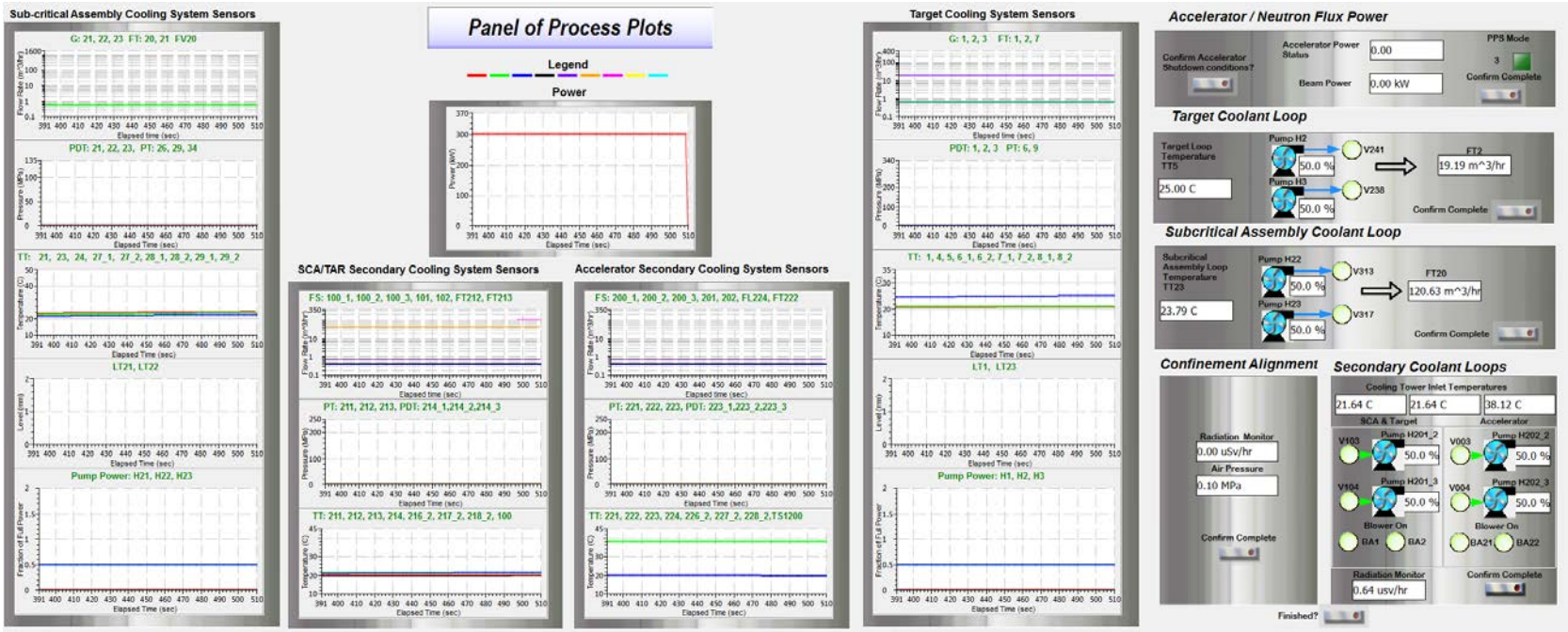

(a) Accelerator power turned off

(b) Secondary cooling system air blower turned off

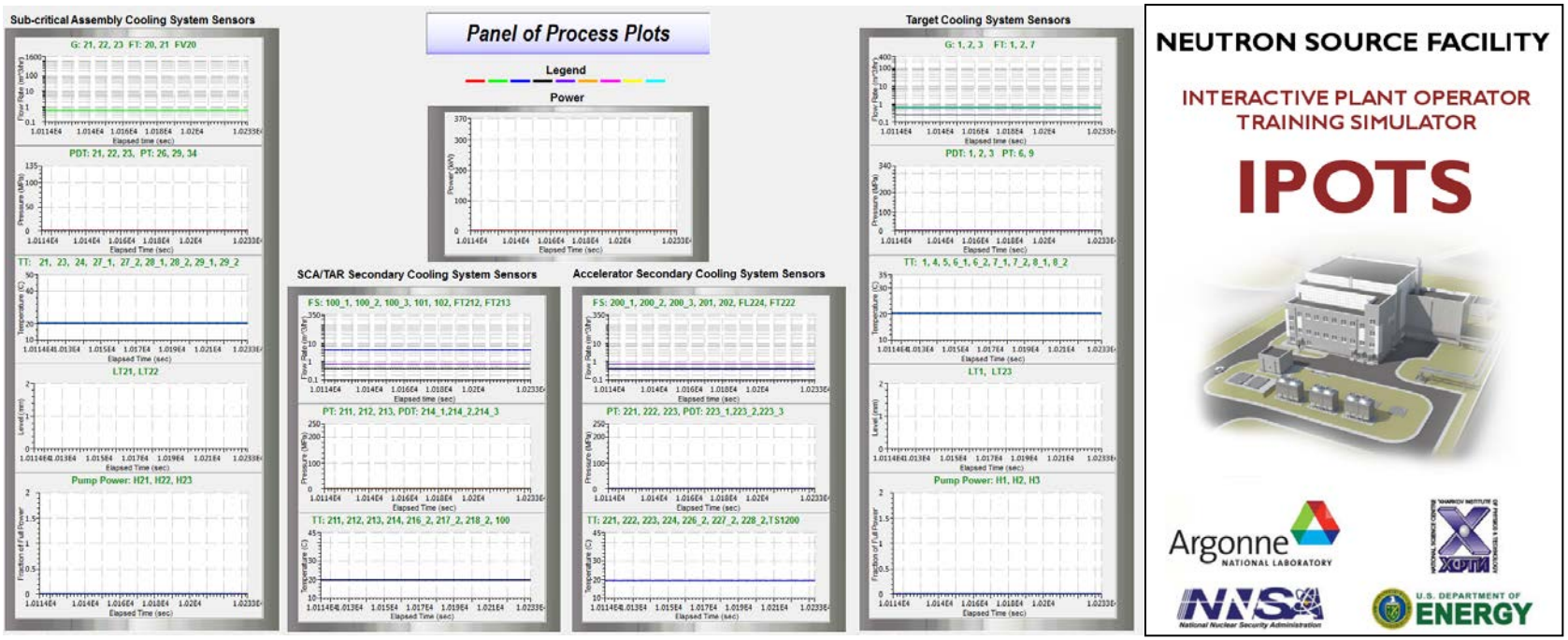

(b) Shutdown completed

Figure 122. Shutdown sequence

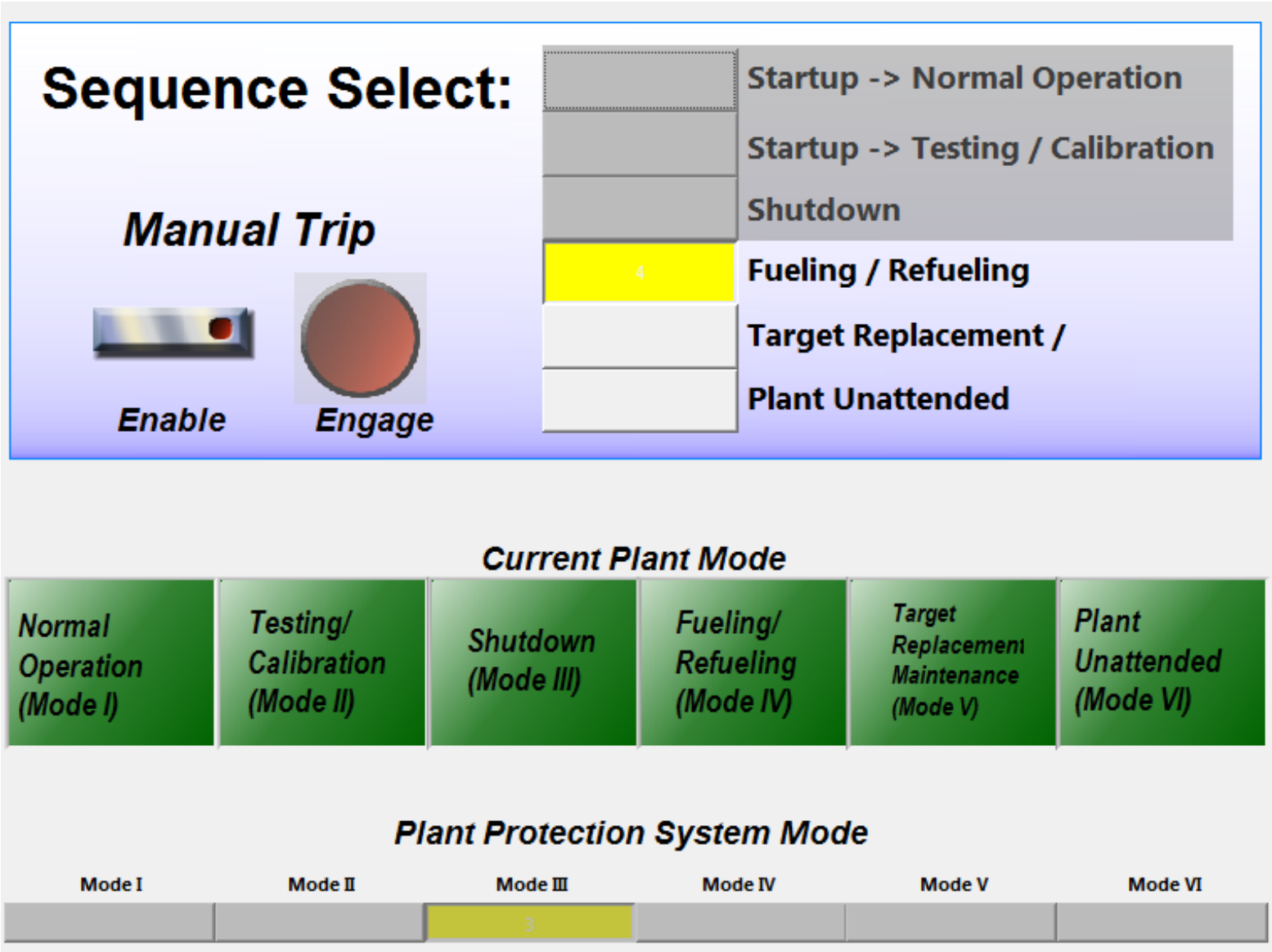

Figure 123. Fueling/refueling sequence invoked from operator main panel

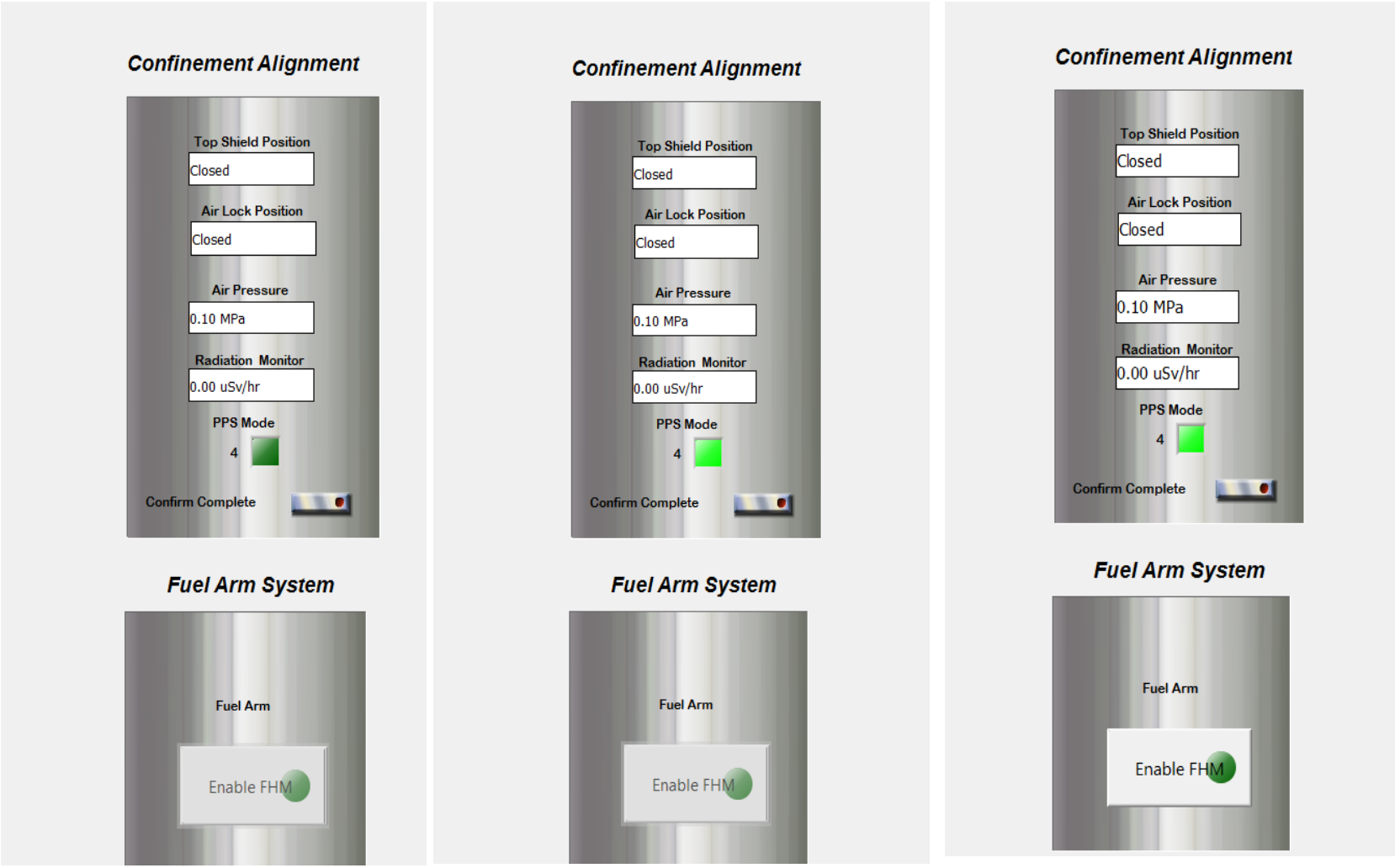

Figure 124. Loading/Unloading mode entry sequence

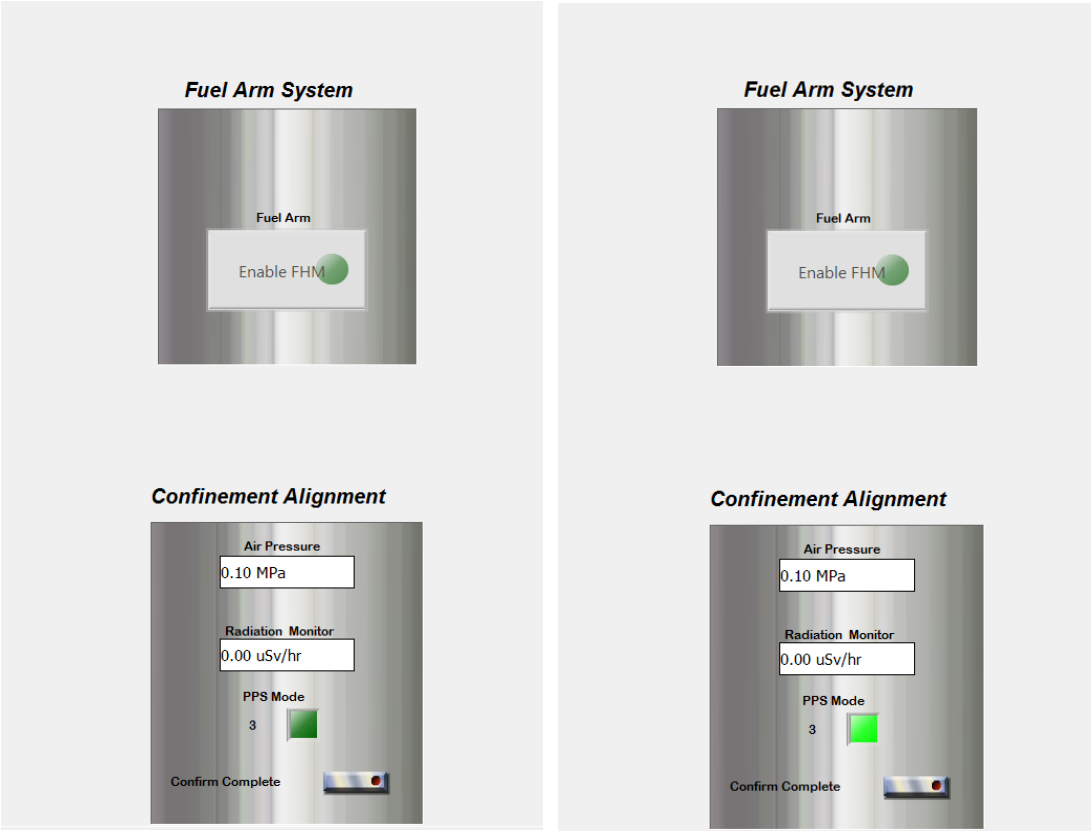

Figure 125. Loading/Unloading mode exit sequence

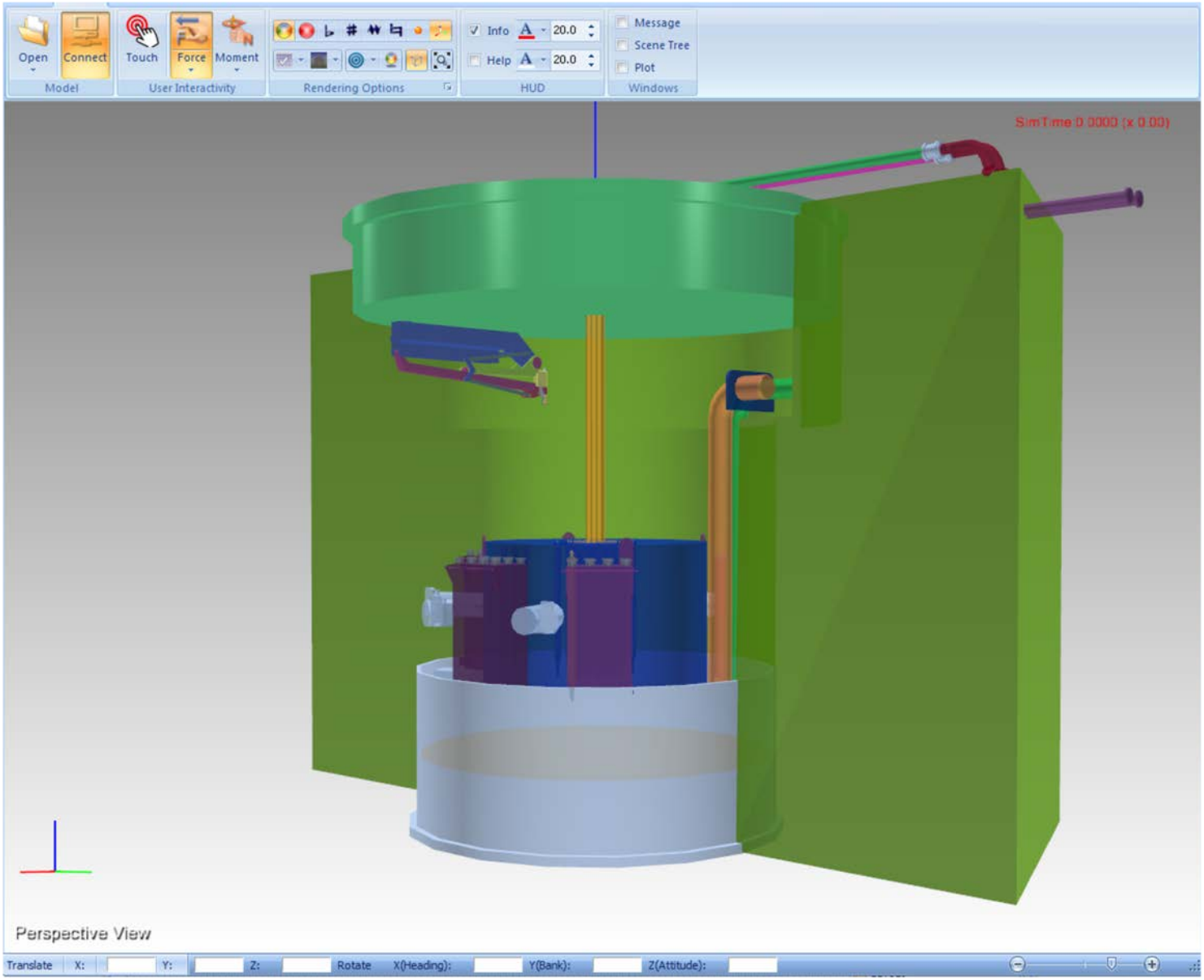

Figure 126. Fuel handling machine simulator

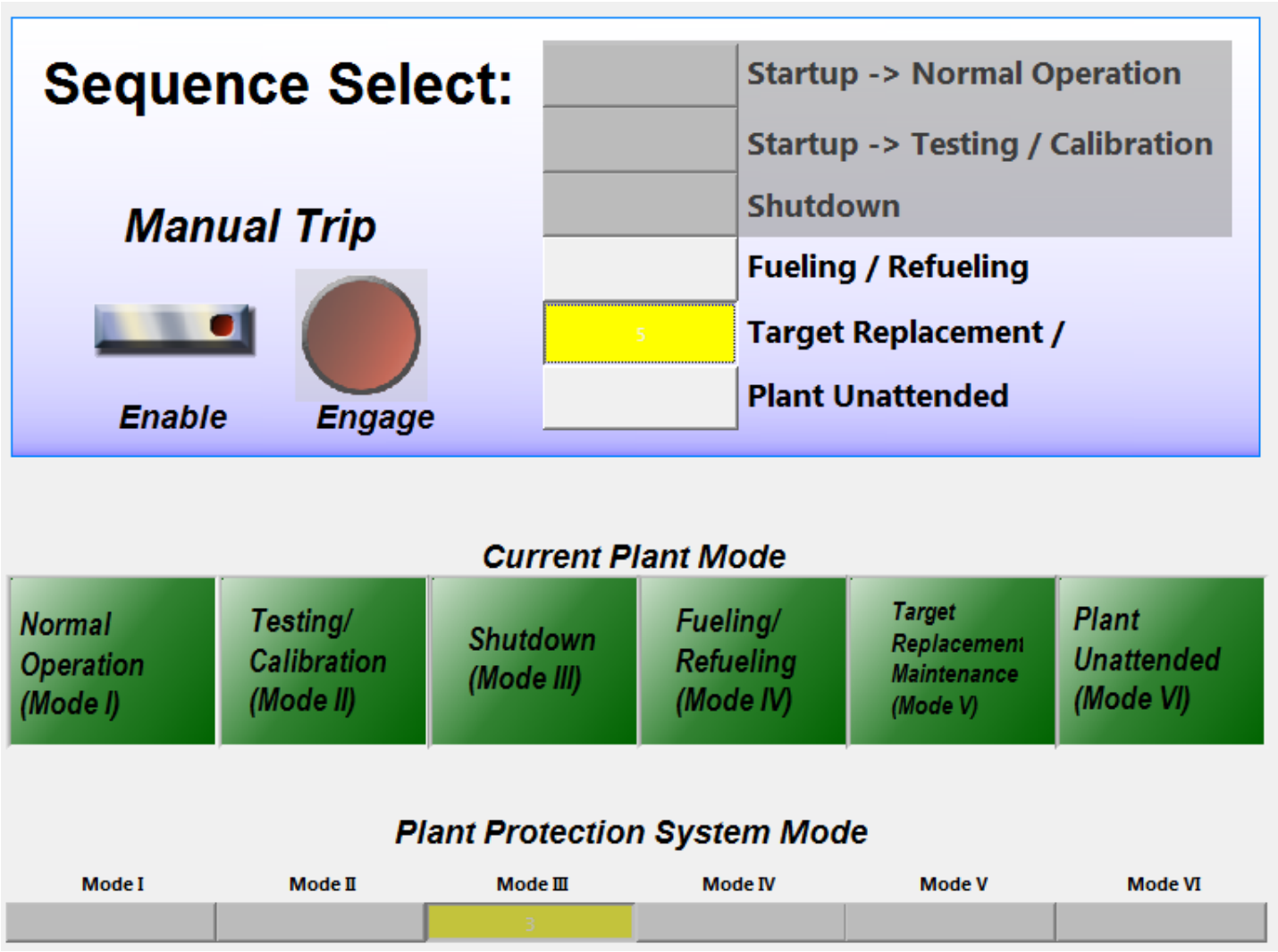

Figure 127. Target handling/maintenance sequence invoked from operator main panel

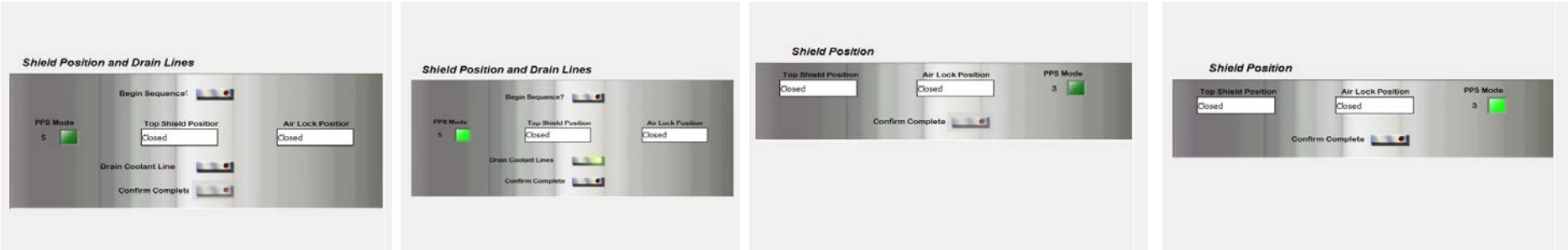

Figure 128. Target handling/maintenance mode entry and exit sequence

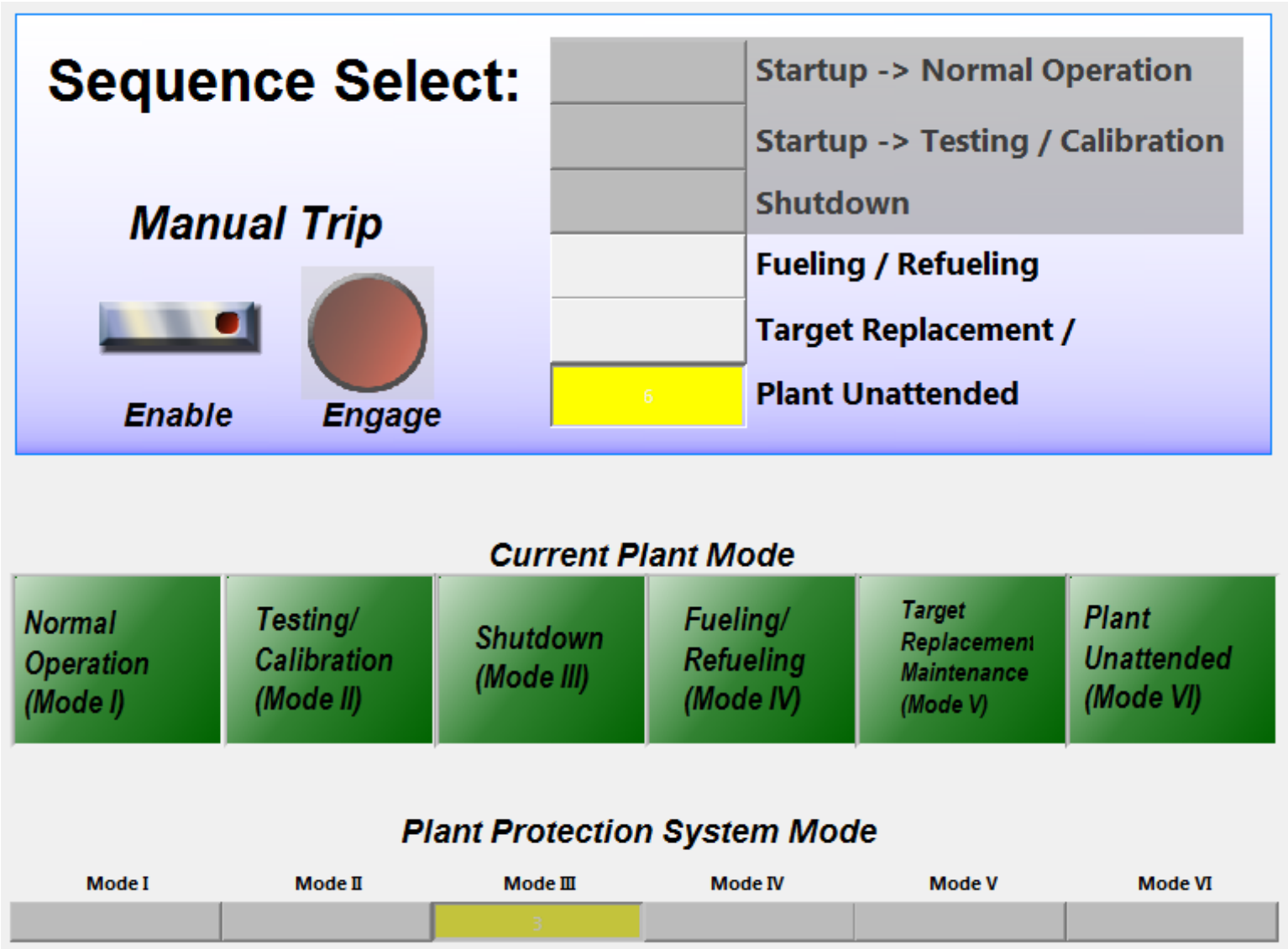

Figure 129. Plant unattended sequence invoked from operator main panel

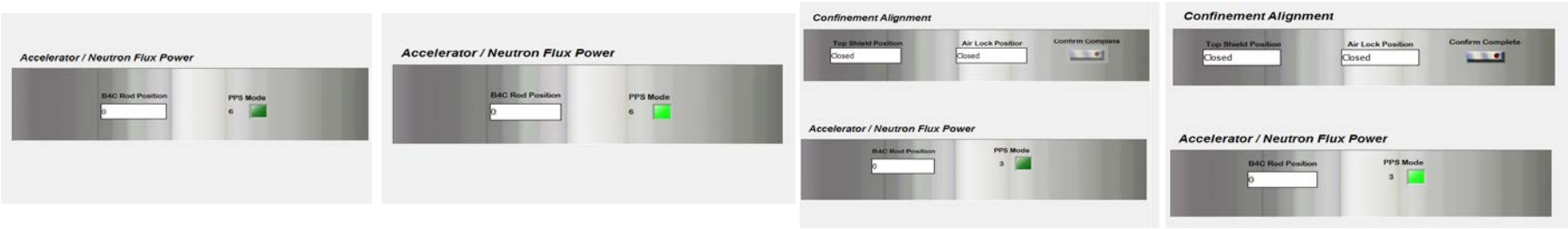

Figure 130. Plant unattended mode entry and exit sequence

Nuclear Engineering Division
Argonne National Laboratory
9700 South Cass Avenue, Bldg. 208
Argonne, IL 60439-

www.anl.gov

Argonne National Laboratory is a U.S. Department of Energy
laboratory managed by UChicago Argonne, LLC