ANL/CSE-13/36

Argonne Mockup of the Two Frontend Processes for the Hot-Cell Demonstrations to Be Run at Oak Ridge National Laboratory

Chemical Science and Engineering Division

About Argonne National Laboratory
Argonne is a U.S. Department of Energy laboratory managed by UChicago Argonne, LLC under contract DE-AC02-06CH11357. The Laboratory's main facility is outside Chicago, at 9700 South Cass Avenue, Argonne, Illinois 60439. For information about Argonne and its pioneering science and technology programs, see www.anl.gov.

DOCUMENT AVAILABILITY

Online Access: U.S. Department of Energy (DOE) reports produced after 1991 and a growing number of pre-1991 documents are available free via DOE's SciTech Connect (http://www.osti.gov/scitech/)

Reports not in digital format may be purchased by the public from the National Technical Information Service (NTIS):
U.S. Department of Commerce
National Technical Information Service
5301 Shawnee Rd
Alexandra, VA 22312
www.ntis.gov
Phone: (800) 553-NTIS (6847) or (703) 605-6000
Fax: (703) 605-6900
Email: **orders@ntis.gov**

Reports not in digital format are available to DOE and DOE contractors from the Office of Scientific and Technical Information (OSTI):
U.S. Department of Energy
Office of Scientific and Technical Information
P.O. Box 62
Oak Ridge, TN 37831-0062
www.osti.gov
Phone: (865) 576-8401
Fax: (865) 576-5728
Email: **reports@osti.gov**

Disclaimer
This report was prepared as an account of work sponsored by an agency of the United States Government. Neither the United States Government nor any agency thereof, nor UChicago Argonne, LLC, nor any of their employees or officers, makes any warranty, express or implied, or assumes any legal liability or responsibility for the accuracy, completeness, or usefulness of any information, apparatus, product, or process disclosed, or represents that its use would not infringe privately owned rights. Reference herein to any specific commercial product, process, or service by trade name, trademark, manufacturer, or otherwise, does not necessarily constitute or imply its endorsement, recommendation, or favoring by the United States Government or any agency thereof. The views and opinions of document authors expressed herein do not necessarily state or reflect those of the United States Government or any agency thereof, Argonne National Laboratory, or UChicago Argonne, LLC.

ANL/CSE-13/36

Argonne Mockup of the Two Frontend Processes for the Hot-Cell Demonstrations to Be Run at Oak Ridge National Laboratory

by
George F. Vandegrift, James Bailey, M. Alex Brown, Artem Gelis,
James Jerden, Lohman Hafenrichter, Andrew Hebden,
Dominique Stepinski, and Stan Wiedmeyer
Chemical Science and Engineering Division, Argonne National Laboratory

prepared for
U.S. Department of Energy, National Nuclear Security Administration,
Office of Defense Nuclear Nonproliferation

July 31, 2013

CONTENTS

1 INTRODUCTION 1

2 MOCKUP TESTING OF THE AMBIENT-PRESSURE, NITRIC-ACID DISSOLVER SYSTEM 3

2.1 Mockup February 2013 3
2.2 Mockup June 2013 3

3 MOCKUP TESTING OF THE ACID FRONTEND PROCESS—COLUMN SEPARATION 5

3.1 Mockup February 2013 5
3.2 Mockup June 2013 5

4 MOCKUP TESTING OF THE ELECTROCHEMICAL FRONTEND PROCESS 8

4.1 Mockup February 2013 8
4.2 Mockup June 2013 8

5 REFERENCES 11

APPENDIX A: Working Draft (6/30/2013) Procedure for Remote Operation of the Acid Dissolver System 12

APPENDIX B: Working Draft (June 30, 2013) Procedure for Remote Operation of the Column Separation System 22

APPENDIX C: Working Draft (6/30/2013) Procedure for Remote Operation of the Electrochemical Dissolver System 30

FIGURES

1 Manipulator Mockup Rack Used to Optimize Remote Operation of the Frontend Equipment 2

2 Final Configuration of the Acid Dissolver System 4

3 Setup of the Acid Frontend Process—Column Separation 6

4 The Column Separation Setup for the Acid Frontend Process 7

FIGURES (Cont.)

5 Flow Diagram Constructed by ORNL for the Electrochemical Dissolution 9

6 The Back and Front View of the Full System Mounted on the Lifting Device..... 10

ARGONNE MOCKUP OF THE TWO FRONTEND PROCESSES FOR THE HOT-CELL DEMONSTRATIONS TO BE RUN AT OAK RIDGE NATIONAL LABORATORY

1 INTRODUCTION

The Global Threat Reduction Initiative (GTRI) Conversion Program develops technology necessary to convert civilian facilities that use high enriched uranium (HEU) to low enriched uranium (LEU) fuels and targets. The conversion of conventional HEU dispersion targets to LEU for the production of Mo-99 requires approximately five times the uranium in a target to maintain the Mo-99 yield per target; therefore, processes involving high-density metal LEU foil targets are a primary focus of this research and development effort.

Under GTRI, Argonne National Laboratory (Argonne) is involved in a number of research and development activities that support conversion of current Mo producers from HEU to LEU targets. Argonne has developed two frontend options to current processes for Mo-99 production from LEU-foil targets: (1) ambient pressure dissolution of LEU-foil in nitric acid followed by extraction of Mo-99 using a titania column, and (2) electrochemical dissolution of LEU-foil in an aqueous bicarbonate solution to produce an alkaline Mo-99 feed. These development efforts have been documented by a series of topical reports and a meeting paper (Jerden et al. 2011, 2013).

Both of the frontend process options under development have two major goals. The first goal is to produce a Mo-product solution from the LEU-foil frontend that will be compatible with current purification operations and that will, with the same number of targets irradiated, provide the same or a higher yield of Mo-99 at the end of processing. The second goal is to deliver a product solution that is of the same or higher Mo purity than the current solution and is of equal or better compatibility with current purification process.

For the nitric acid process, the irradiated LEU foil and associated 10–15 μm Ni fission-recoil barrier is removed from the annular target and dissolved in nitric acid at near ambient pressure. In this process, the uranium, nickel, and all fission and activation products are dissolved. The resultant solution (approximately 0.5 L) will contain approximately 7 mM Mo, 450 g-U/L as uranyl nitrate, and 1 M nitric acid. After dissolution, the solution will be fed into a small column of titania sorbent, where Mo will be adsorbed on the column with minor amounts of other feed components. The column will be washed with nitric acid and then water; then Mo will be stripped into a sodium hydroxide solution.

For the electrochemical process, the LEU-foil target and an associated 40 μm aluminum fission recoil barrier are dissolved sequentially. The aluminum barrier is first dissolved in a basic solution followed by the low-pressure electrochemical dissolution of the LEU foil in a bicarbonate aqueous solution. The electrochemical dissolution involves anodic oxidation of the uranium metal within the bicarbonate aqueous matrix. After the target is completely dissolved, the uranium, carbonate, and alkaline-insoluble fission and activation products are removed from

solution by precipitation involving the addition of calcium oxide powder. Molybdenum remains in solution during the precipitation step and the resulting solution can be fed into the current purification processes.

These two frontend processes have been demonstrated in the laboratory and optimized for remote operation in a hot-cell facility. This optimization was performed at Argonne using our hot-cell mockup facility, which is equipped with two fully operational hot-cell manipulators and a simulated hot cell window. This was done in preparation for a hot demonstration of both processes at Oak Ridge National Laboratory (ORNL) using fully irradiated foils. The demonstrations will involve irradiating uranium foil targets in the High Flux Isotope Reactor (HFIR) and performing the dissolutions and molybdenum separation steps (i.e., separation on titania column for acidic solution and selective precipitation for alkaline solution) in hot cells at ORNL. This report describes the mockup demonstrations performed at Argonne before the frontend equipment was shipped to ORNL for the hot-cell demonstrations. Figure 1 shows the mockup facility. Appendices A–C are the draft procedures developed during the mockup phase and sent to ORNL for comment.

FIGURE 1 Manipulator Mockup Rack Used to Optimize Remote Operation of the Frontend Equipment

2 MOCKUP TESTING OF THE AMBIENT-PRESSURE, NITRIC-ACID DISSOLVER SYSTEM

The mockup was performed twice. The first test was performed in February 2013. After changes to the equipment were made based on the initial test, a second demonstration was performed in June 2013.

2.1 MOCKUP FEBRUARY 2013

On February 18, 2013, the teams from Argonne and ORNL met to run and discuss the mockup of the acid frontend process at the hot-cell manipulators mockup stage. The remote operation of the LEU-foil nitric-acid dissolver system was tested at Argonne's manipulator mockup station (Figure 1). A step-by-step procedure was developed and stepped through for the frontend demonstration at ORNL hot cells. Following the mockup demonstration, the setup was discussed. Notes were taken on simplifying the procedure. A number of minor changes to components were planned based on discussion during our mock-up demonstration.

2.2 MOCKUP JUNE 2013

Following modifications to components and a revision of the operation procedure based on discussions from the February mockup, the dissolver setup was rebuilt on the manipulator mockup rack, and a second remote operation demonstration was performed with ORNL personnel present. This mockup demonstration was successful, and it was decided that no changes were required prior to full-scale demonstration of the system in the Radiochemical Engineering Development Center (REDC) hot cells at ORNL. The final setup for the dissolver system is shown in Figure 2, and the operation procedure that was successfully performed during the June 2013 mockup is shown in Appendix A.

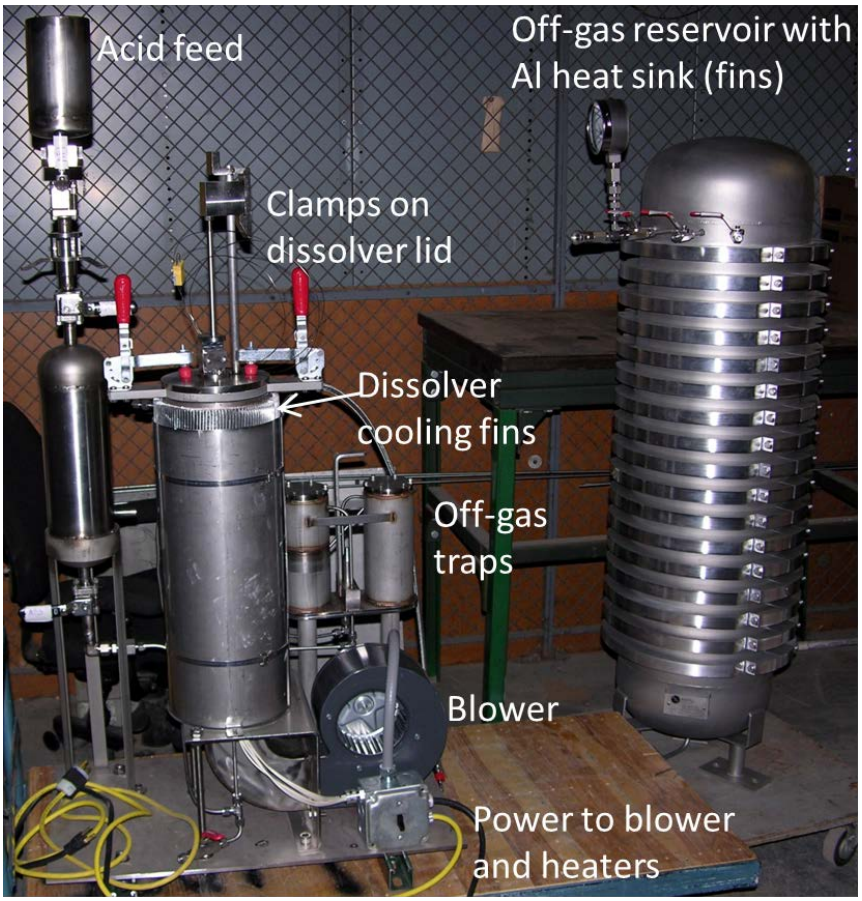

FIGURE 2 Final Configuration of the Acid Dissolver System (This setup was successfully tested for remote operation during the June 2013 mockup demonstration at Argonne.)

3 MOCKUP TESTING OF THE ACID FRONTEND PROCESS—COLUMN SEPARATION

The mockup was performed twice. The first test was performed in February 2013. After changes to the equipment were made based on the initial test, a second demonstration was performed in June 2013.

3.1 MOCKUP FEBRUARY 2013

On February 18, 2013, the teams from Argonne and ORNL met to run and discuss the mockup of the acid frontend process at the hot-cell manipulators mockup stage. The column separation system was built and included an 18-sample collection valve, FMI® pump, three 3-way switching valves, two 3-port flow valves with a T-plug, a 5-way valve, one column, and all necessary feed and collection bottles. The setup was tested for compatibility with the hot-cell manipulators. It was demonstrated that the manipulators were capable of operating all valves. The setup was tested using manipulators, and water was pumped through the system according to the step-by-step procedure developed for the frontend demonstration at ORNL hot cells. Following the mockup demonstration, the setup was discussed. Notes were taken on simplifying the procedure, installing an additional column, and making improvements of the setup to ensure a successful demonstration at ORNL. As result of the discussions the setup was updated (Figure 3).

3.2 MOCKUP JUNE 2013

Following the February mockup, the setup was rebuilt according to the design in Figure 3, and improvements were made to ensure steady flow, without oscillations, through the system. The assembled column separation setup with all components is shown is Figure 4. During the second mockup, the Argonne and ORNL staff walked through the step-by-step procedure, and recommendations were made on labeling of valves and bottles to eliminate ambiguities. Argonne and ORNL staff agreed that ORNL staff will reassemble and test the setup at the ORNL cold area. Appendix B shows the procedure tested in June 2013.

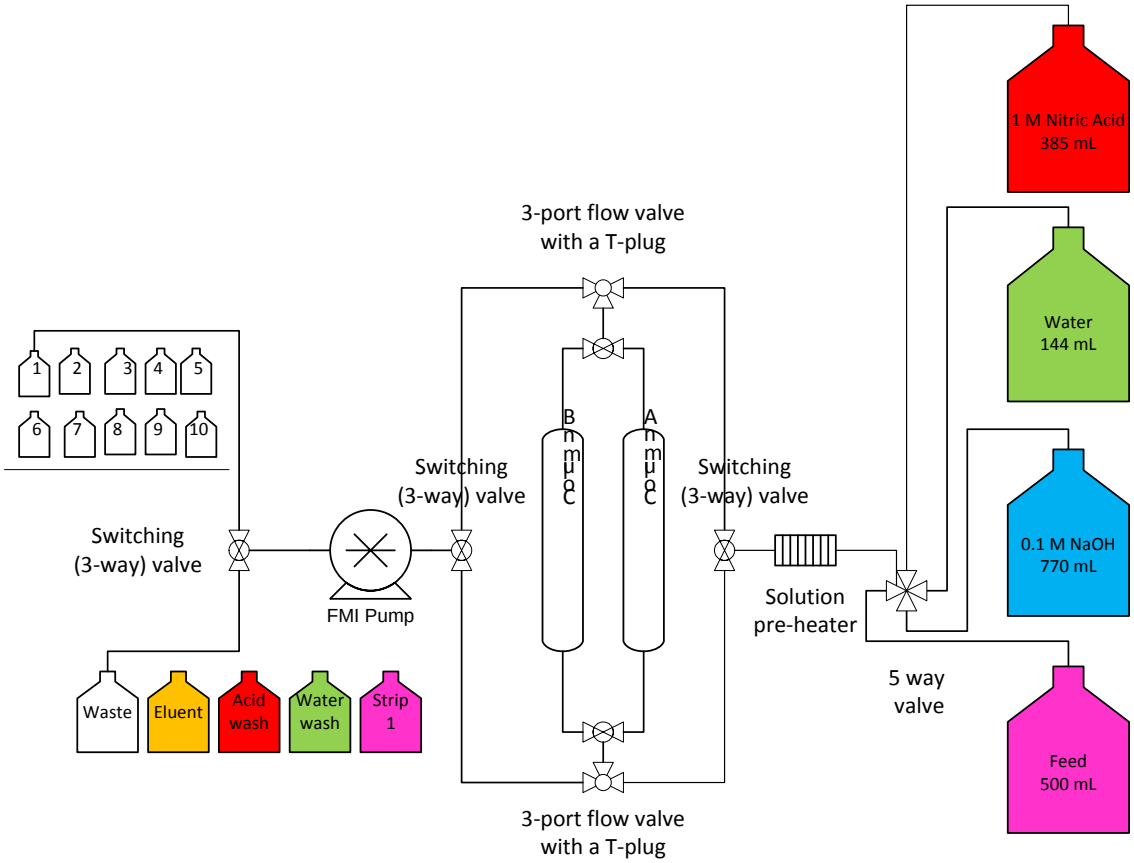

FIGURE 3 Setup of the Acid Frontend Process—Column Separation

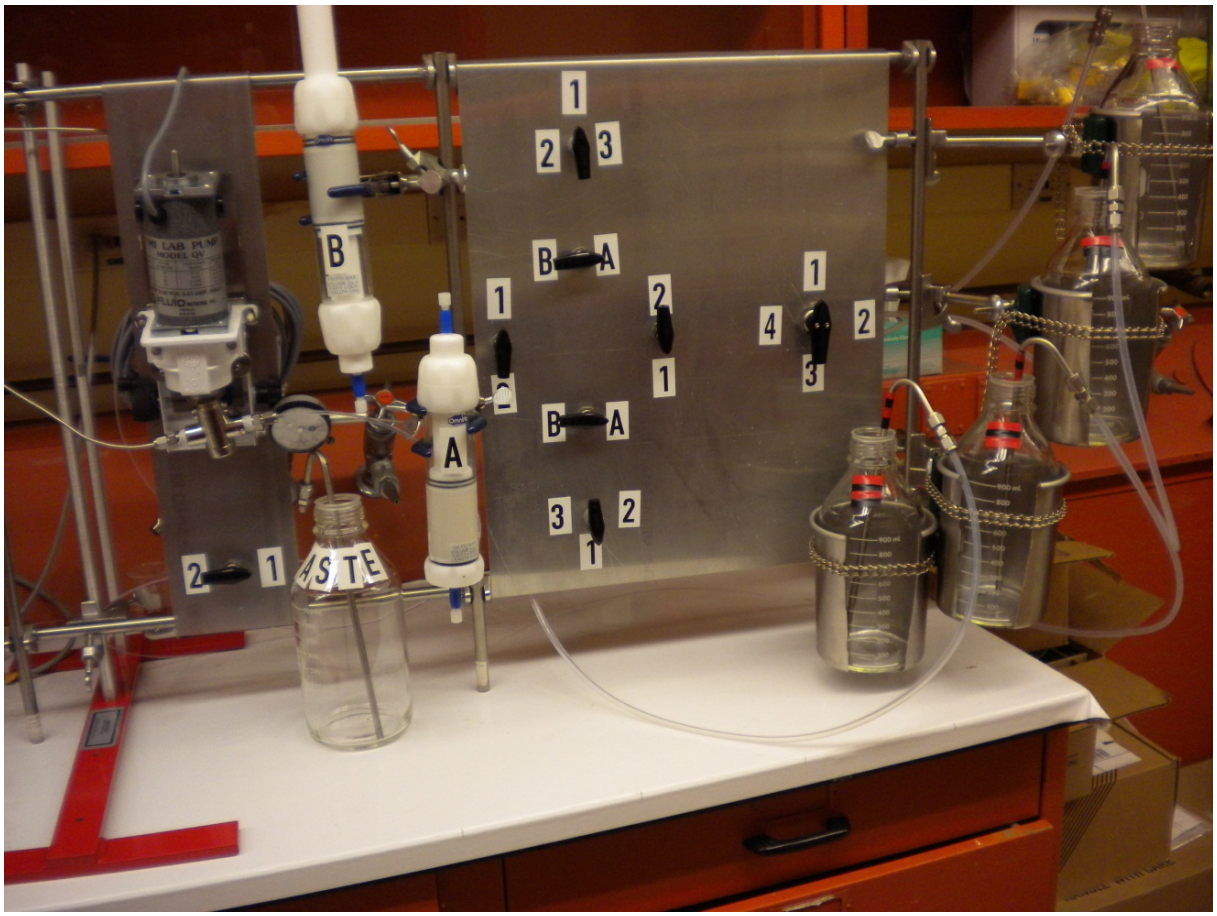

FIGURE 4 The Column Separation Setup for the Acid Frontend Process

4 MOCKUP TESTING OF THE ELECTROCHEMICAL FRONTEND PROCESS

The mockup was performed twice. The first test was performed in February 2013. After minor changes to the equipment were made based on the initial test, a second demonstration was performed in June 2013. Unlike the other mockup testing, ORNL staff members were not present during the second mockup tests. The modifications following the first mockup test were not significant, so they did not feel it was necessary.

4.1 MOCKUP FEBRUARY 2013

On February 18, 2013, the teams from Argonne and ORNL met to run and discuss the first mockup of the electrochemical system with the hot-cell manipulators. At the time of the meeting, only the dissolver and mixing tanks had been built; a full flowsheet had not been constructed. The dissolver and mixer were connected with PVC tubing and a vacuum pump was attached for negative pressure.

The first task was to test the compatibility of the dissolution basket with the hot cell manipulators. The pieces of the basket were successfully disconnected and reconnected by the manipulators. A piece of aluminum foil served as a surrogate for uranium foil. The manipulators were demonstrated to be capable of flattening the foil and placing it in the dissolution basket. The basket was then lowered into the dissolver and connected. Following this, 1 L of water was pumped from the dissolver into the mixing tank.

Discussions continued regarding the pressure, off-gases, and miscellaneous connections of the system. The production of hydrogen gas during the aluminum dissolution was discussed. It was determined that the system should be maintained under a slight negative pressure combined with a nitrogen “sweep gas” during the dissolution. ORNL provided a flow diagram and description of an off-gas system to provide these attributes. Hot-cell compatibility of the system was also discussed. It was determined that the entire system will be mounted on a lifting device to allow for mobility within the hot-cell at ORNL. As a result of the mockup and discussions, the flow diagram in Figure 5 was constructed.

4.2 MOCKUP JUNE 2013

Following the February mockup, a new mixing tank, two product tanks, and a lifting device were constructed at Argonne central shops. The connecting equipment was purchased through various vendors to build the process depicted in the flow diagram.

A second mockup of the electrochemical dissolver was performed on June 24, 2013. Argonne staff pumped 1.5 L of water successfully through each stage of the process using the hot-cell manipulators. Small iterations to the process were made to adhere to the manipulator

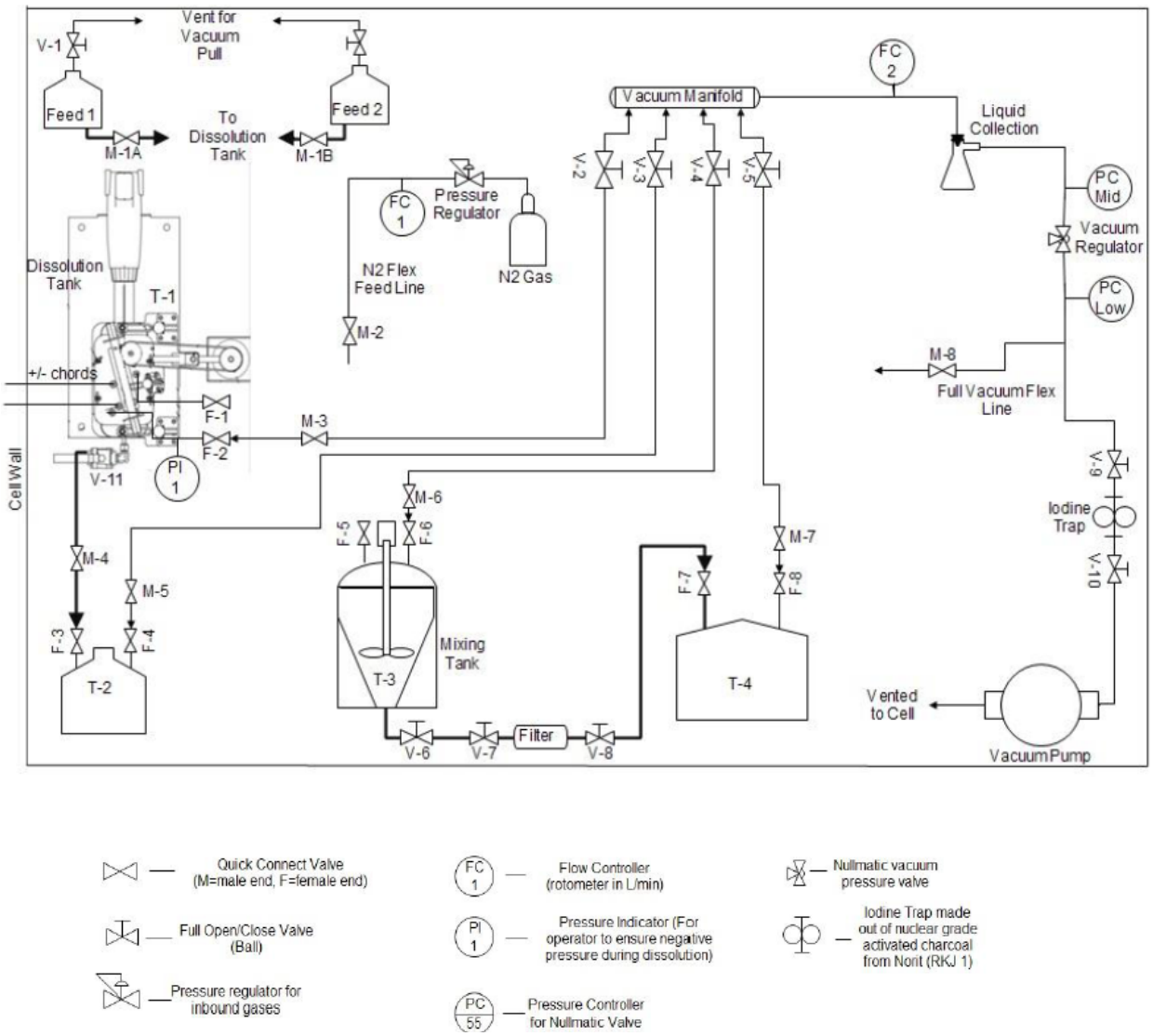

FIGURE 5 Flow Diagram Constructed by ORNL for the Electrochemical Dissolution (T-2 represents the sodium hydroxide waste tank, T-3 represents the mixing tank for the uranium/fission product precipitation, and T-4 represents the Mo-99 product tank.)

capabilities (i.e., valve locations, electrical cord connections). A procedure was written for assembly and operation. Figure 6 shows the completed apparatus at the hot-cell mockup facility. Appendix C is the procedure tested in June 2013.

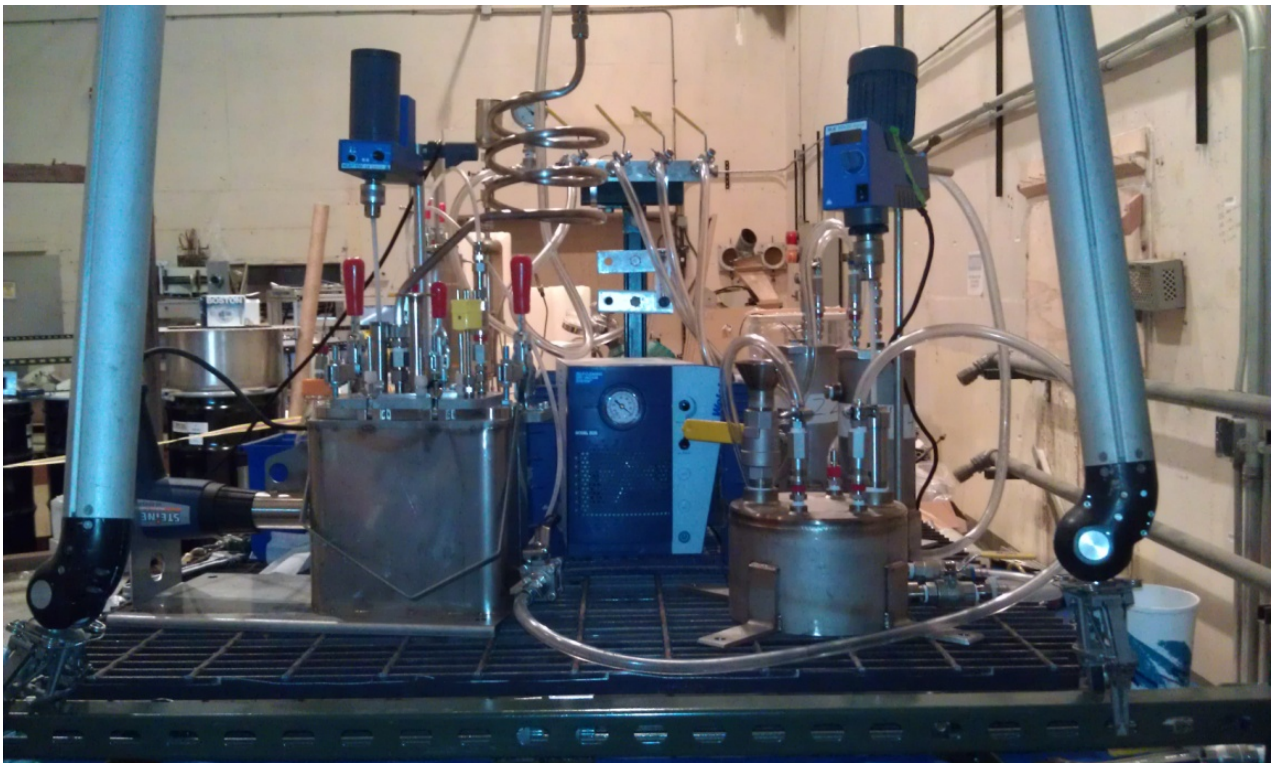

FIGURE 6 The Back (top) and Front (bottom) View of the Full System Mounted on the Lifting Device (The hot-cell manipulators can be seen in the front view.)

5 REFERENCES

Jerden, J.L. Jr., D.C. Stepinski, A. Gelis, and G.F. Vandegrift, 2011, *Front-End Processes for Conversion of Current HEU-Based Alkaline Processes to LEU-Foil Targets: Volumes and Compositions of All Waste, Product, and Off-Gas Streams from Both Front-End Option*, ANL/CSE-13/28, Argonne National Laboratory, April 30.

Jerden, J., A. Gelis, D. Stepinski, M. Brown, J. Bailey, A. Hebden, L. Hafenrichter, and G.F. Vandegrift, 2013, "Development and Performance Testing of Two Frontend Processes for Mo-99 Production from LEU-Foil Targets," *Proceedings of the Mo-99 2013 Topical Meeting on Molybdenum-99 Technological Development*, April 1–5, Chicago, Illinois. Available at http://mo99.ne.anl.gov/2013/pdfs/Mo99%202013%20Web%20Papers/S7-P6_Jerden_Paper.pdf.

APPENDIX A:

WORKING DRAFT (6/30/2013)
PROCEDURE FOR REMOTE OPERATION OF THE ACID DISSOLVER SYSTEM

Schematic lay out for ambient pressure nitric acid dissolver system

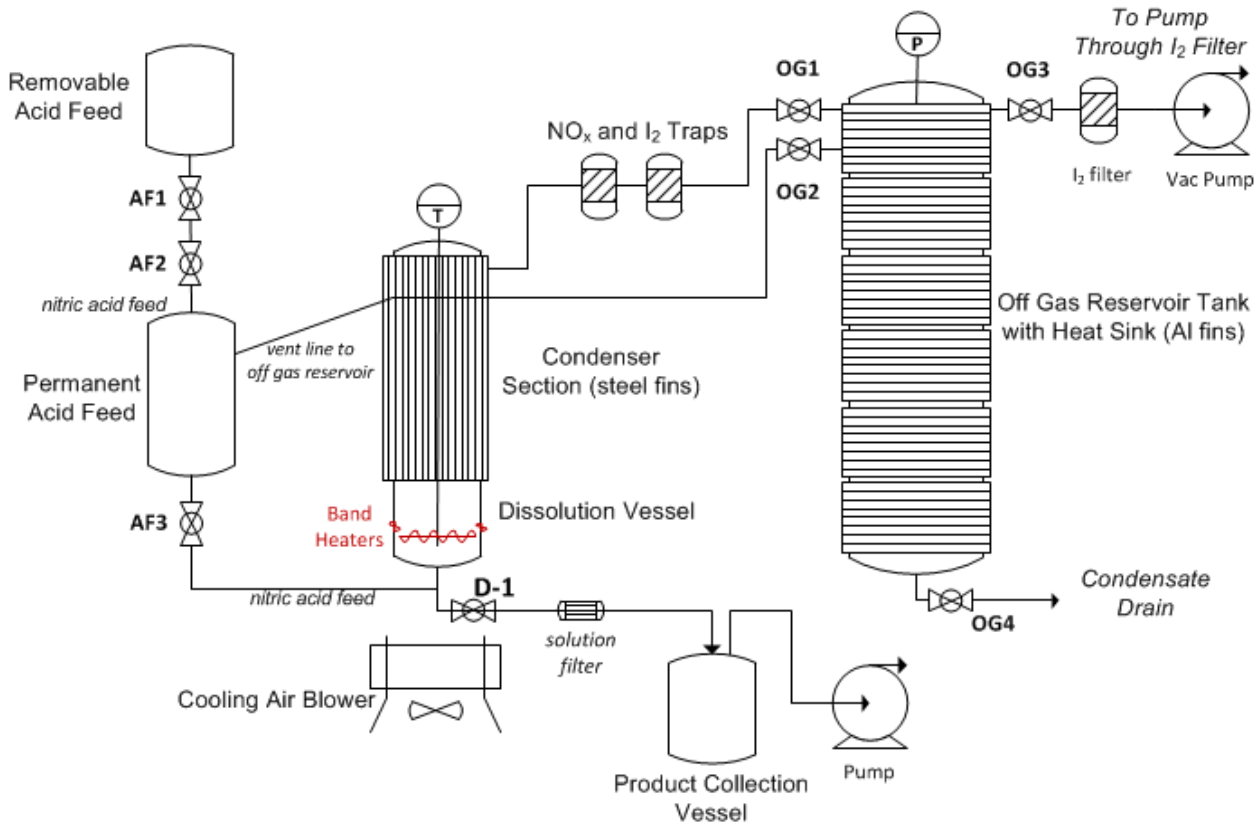

Make in-cell tubing connections

- Connect flexible steel tubing between dissolver condenser section and off-gas reservoir top using quick disconnect located at top of off-gas tank (at valves OG1 and OG2).

Load foil basket into dissolver

- Unclamp dissolver lid (if clamped).
- Lift lid out of dissolver using manipulator grip piece and set lid on rack so that it remains upright (not shown).
- Using the sliding guide on top of lid, lower foil basket to full down position.

- Place foil in dissolver basket.
- Slide foil basket to full up position and secure guide on hook assembly on top of lid.
- Ensure O-ring is in place on dissolver top.
- Lower dissolver lid in place within the dissolver (basket rod should be secured in up position).
- Clamp dissolver lid onto dissolver
- Turn of cooling fan and confirm that air is flowing at top of cooling dissolver fins.
- Record temperature of cooling air (hot cell air temperature)

Feed acid to dissolver

- Confirm that valves OG1 and OG2 at top of off gas reservoir are open (lines to dissolver and permanent acid feed chamber).
- Confirm that valves OG3 and OG4 at top of and bottom of off gas reservoir are closed.
- Remove top acid feed vessel from permanent acid feed chamber.
- Open valve AF1 and fill removable acid feed vessel with 500mL of nitric acid of appropriate concentration (acid concentration determined by mass of uranium to be dissolved – look up table to be provided).
- Close valve on removable acid feed vessel [valve AF1] after filling.
- Place removable acid feed vessel onto permanent acid feed chamber.
- Confirm that valve at base of permanent acid feed chamber [valve AF3, feed to dissolver cup] is closed.
- Open valve AF2.
- Open valve AF1 and wait ~5 minutes for acid to drain from acid feed vessel into acid feed chamber.
- Close valve AF2.
- Close valve AF1.

- Open valve at base of permanent acid feed chamber [AF3] to feed acid into dissolver cup. Wait ~5 minutes for acid to fill dissolver cup.

- Close valve AF3

Dissolve foil

- Close valve OG2 that connects off gas reservoir to permanent acid feed chamber.

- Record time.

- Use sliding guide on dissolver lid to lower the uranium foil containing basket into acid filled dissolver cup.

- Begin recording temperature of dissolver solution at 2 minute intervals (T).

- If acid is below 100oC then power on band heater at base of dissolver to bring acid to boiling temperature (approximately 115oC; acid boiling temperature look up table to be provided).

- If acid is greater than 100oC do not power on dissolver heater.

- If temperature of dissolver solution drops below 100oC turn on power to the band heater to maintain a dissolver temperature of greater than 100oC (acid boiling temperature look up table to be provided).
  - Aside on a possible off-normal condition

- If temperature in dissolver cup exceeds 125oC (indicates all acid has been vaporized) immediately lift foil basket into up position, turn off power to heater and check air flow velocity out of cooling fins (top of dissolver). *This scenario represents an off-normal condition that the dissolver off gas reservoir is designed for. The aluminum heat sink on the reservoir will adsorb heat from vapors and instantaneously condense steam so that the system does not become pressurized.
  - Now back to normal operation procedure

- Continue to record temperature of dissolver solution at 2 minute intervals.

- After 1 hour of boiling the dissolver solution, turn off power to the dissolver heater (if it was needed).

- Using sliding guide on dissolver lid, lift foil basket to upright position.

Remove fission-gases from dissolver system

- Attach vacuum pump to valve OG3 at the top of the off-gas reservoir and open valve.
- Pump down dissolver system from valve OG3, through I2 filter into a standard gas storage cylinder. *Vacuum should be low enough to remove most of off-gas but not low enough to vaporize dissolver solution.
- Agitate dissolver solution during pump down by repeatedly lowering and lifting the dissolver basket in and out of the solution.
- After 30 minutes of pumping close valve OG3 and remove fission gas storage cylinder

Remove product solution from dissolver

- Attach product collection vessel to dissolver drain line (valve D1).
- Attach pump to product collection vessel.
- Open valve D1.
- Turn on pump to remove product solution from dissolver cup.
- Turn off pump when product solution flow stops.
- Turn valve D1 to closed position.

Rinse dissolver

- Remove top acid feed vessel from permanent acid feed chamber.
- Open valve AF1 and fill removable acid feed vessel with 500mL of deionized water.
- Close valve on removable acid feed vessel [valve AF1] after filling.
- Place removable acid feed vessel onto permanent acid feed chamber.
- Open valve AF2.
- Open valve AF1 and wait ~5 minutes for acid to drain from acid feed vessel into acid feed chamber.
- Close valve AF2.

- Close valve AF1.
- Open valve at base of permanent acid feed chamber [AF3] to feed water into dissolver cup. Wait ~ 5 minutes for acid to fill dissolver cup.
- Close valve AF3.
- Agitate rinse solution by repeatedly lowering and lifting the dissolver basket in and out of the solution.
- After agitating rinse solution for ~5 minutes, open D1 valve to start flow of product.
- Turn on pump to drain rinse solution into the product collection vessel.
- •Turn off pump when product solution flow stops.
- •Close valve D1.

Updated layout

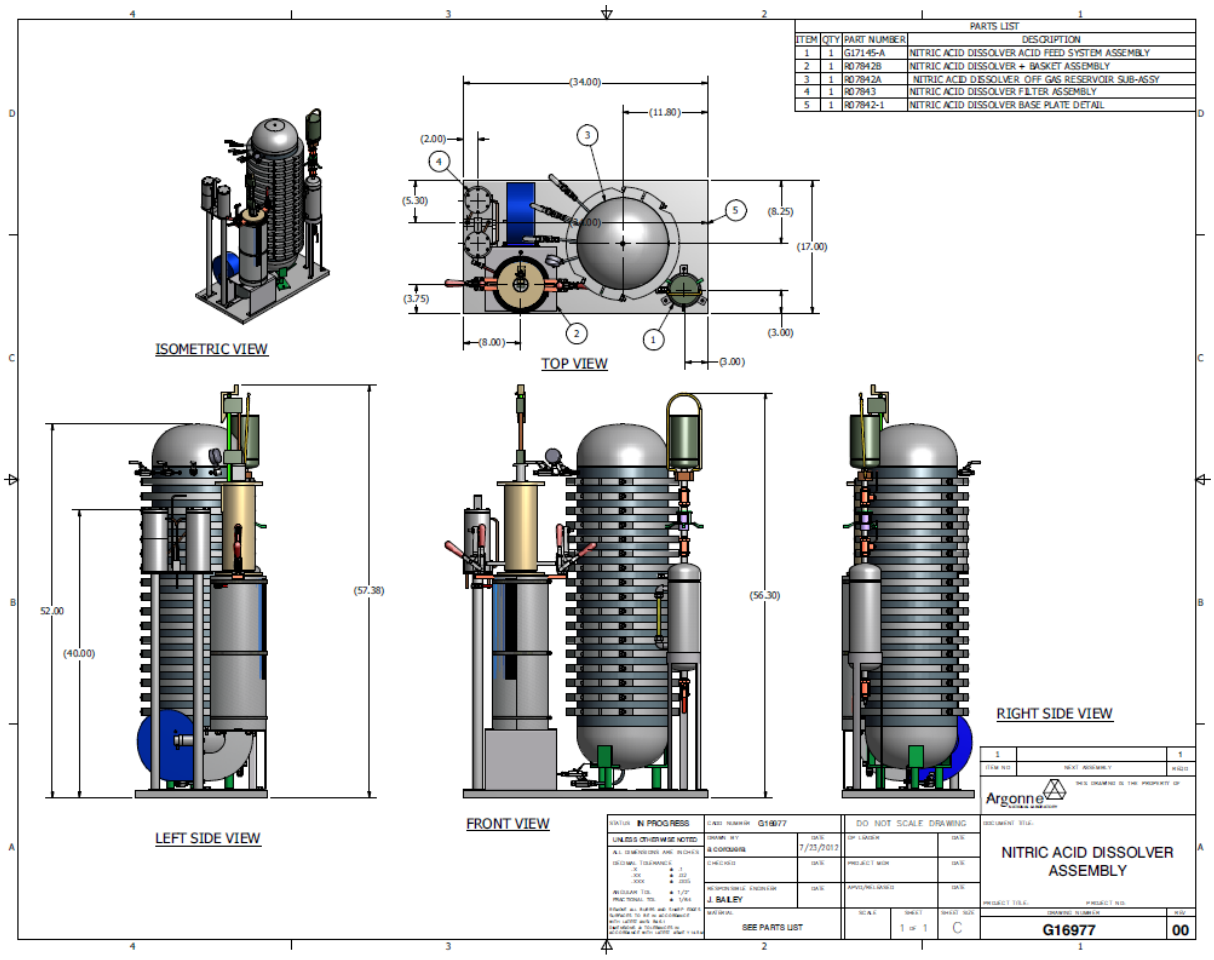

Acid feed components: top vessel is removable, larger vessel is the permanent acid feed chamber

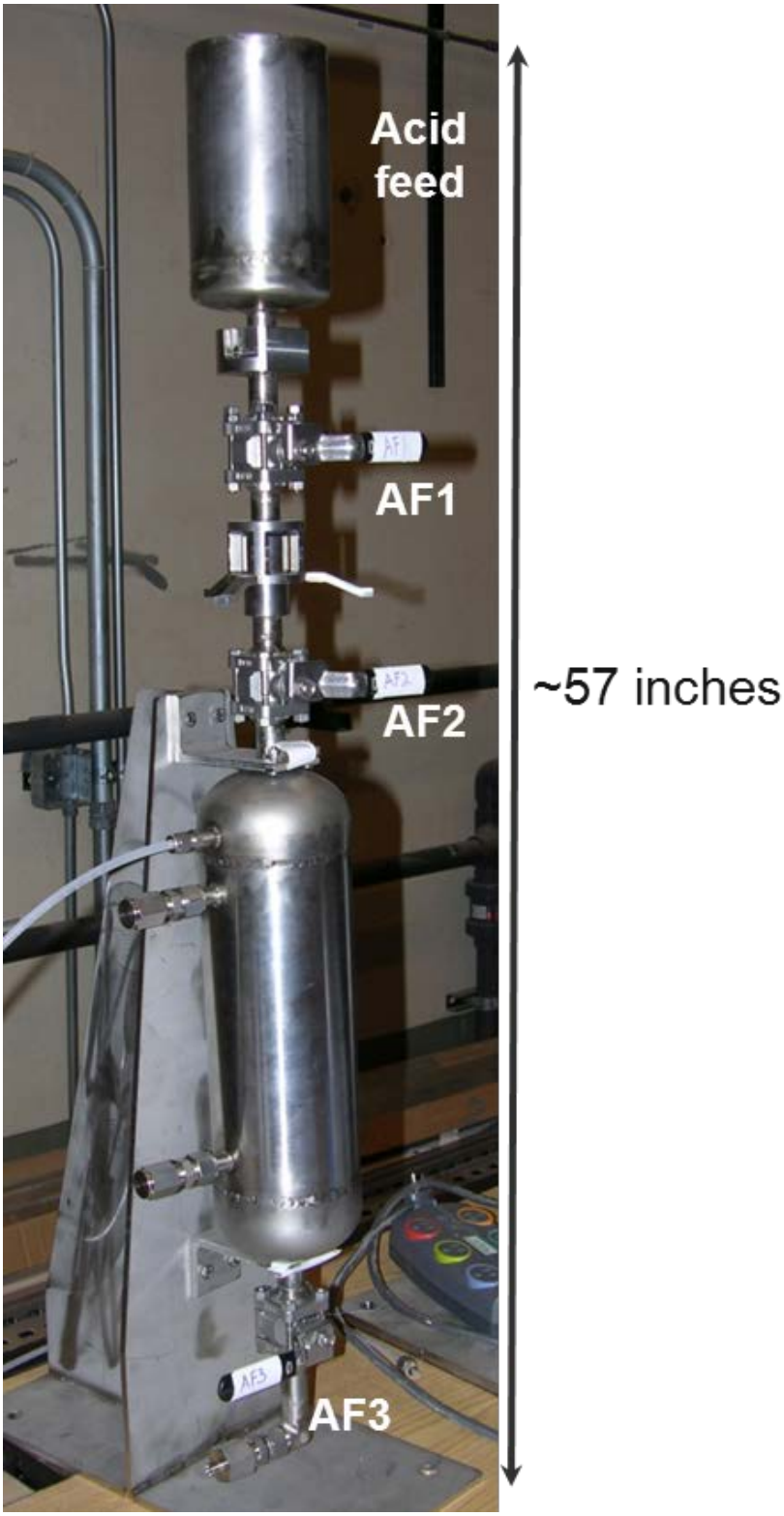

General equipment photographs

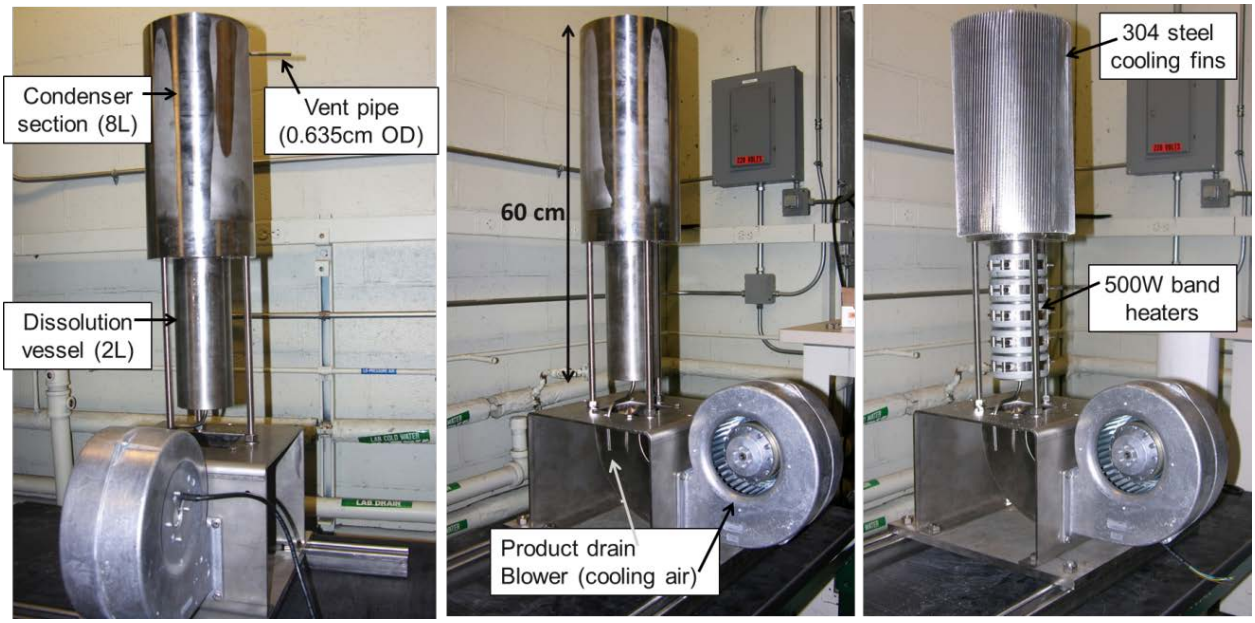

Loading of uranium foil into dissolver basket on bench top

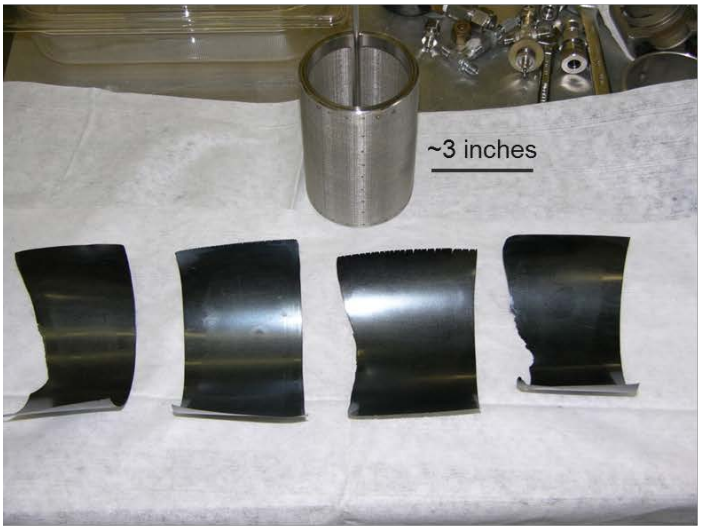

Dissolver body showing three way acid feed/product drain valve (D1)

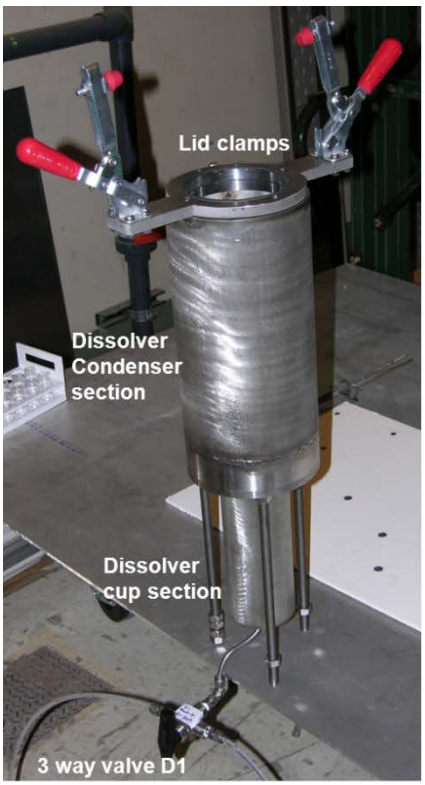

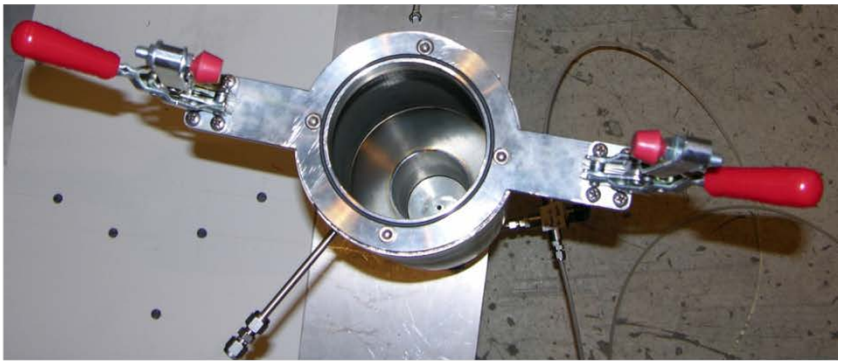

Off gas reservoir with aluminum heat sink fins. The pressure gauge is for off-normal conditions (loss of cooling air flow) the dissolver is designed to operate at ambient pressure – the off gas reservoir was designed to ensure that the system will not become pressurized even if all of the dissolver solution is vaporized.

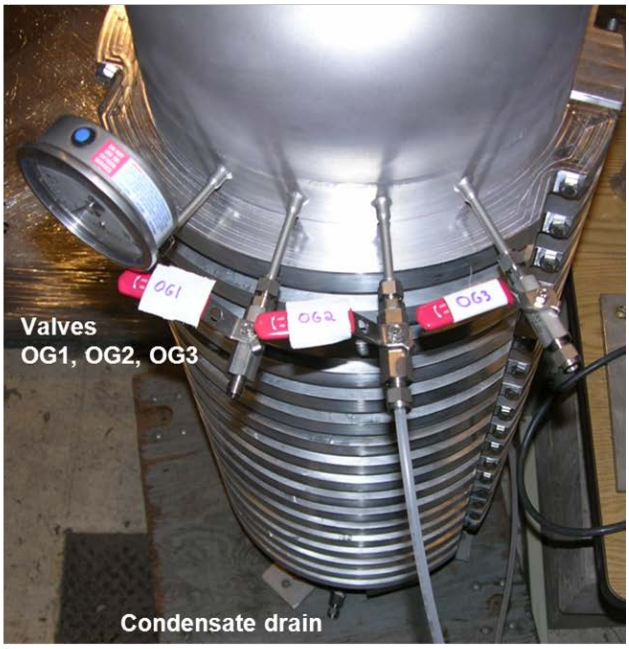

APPENDIX B:

WORKING DRAFT (JUNE 30, 2013)
PROCEDURE FOR REMOTE OPERATION OF THE COLUMN SEPARATION SYSTEM

Pre-procedure

- Feed solutions: 1 M nitric acid - 500 mL, water - 300 mL, 0.1 M NaOH - 900 mL
- Pre-weigh all bottles
- Check pump flow rate utilizing by-pass line by passing water into a pre-weighted waste bottle
- Transfer dissolved target solution into feed bottle

Steps 1and 2
Bleed lines with (1) base, (2) water
Step 1
V 1: open to 4
V 2: open to 2
V 3: open to 1
V 4: open to 1
V 5: open to 1
V 6: open to 1
V 7: open to A
V 8: open to A
Eluent line: waste bottle
Flow rate: 5 mL/min
Pump on
Visual: solution dripping into the waste bottle
Time: 1 min

Step 2
V 1: open to 3
V 2: open to 2
V 3: open to 1
V 4: open to 1
V 5: open to 1
V 6: open to 1
V 7: open to A
V 8: open to A
Time: 1 min
Pump off

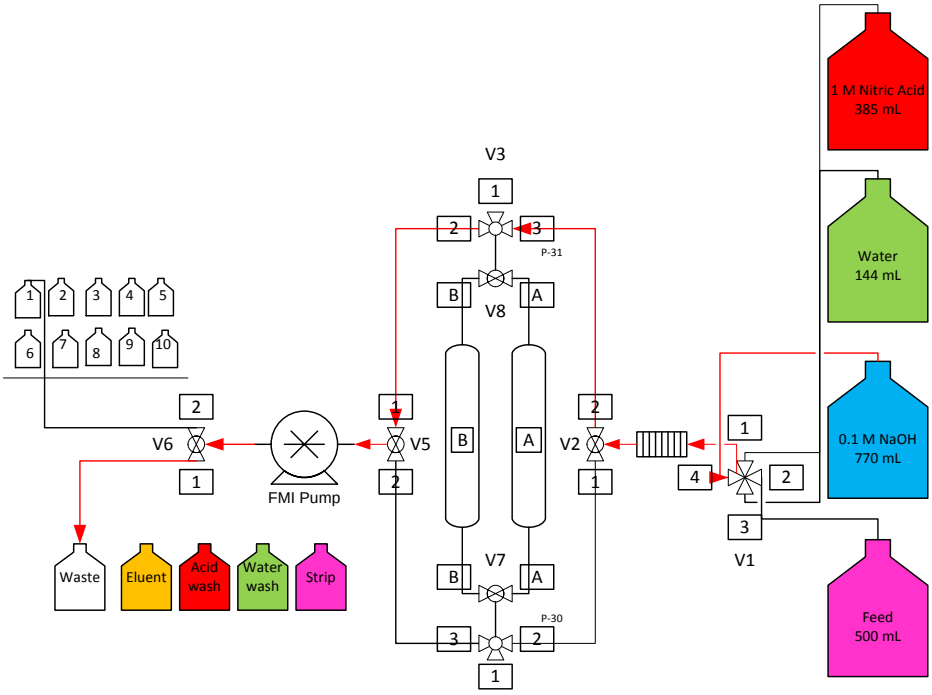

FIGURE 1 Flowchart for step 1 and 2

Steps 3-4
Bleed lines (3) feed, (4) acid
Step 3
V 1: open to 2
V 2: open to 1
V 3: open to 1
V 4: open to 1
V 5: open to 2
V 6: open to 1
Flow rate: 5 mL/min
Eluent line: waste bottle
Pump on
Time: 10 sec

Step 4
V 1: open to 1
V 2: open to 1
V 3: open to 1
V 4: open to 1
V 5: open to 2
V 6: open to 1
Flow rate: 5 mL/min
Eluent line: waste bottle
Time: 1 min
Pump off

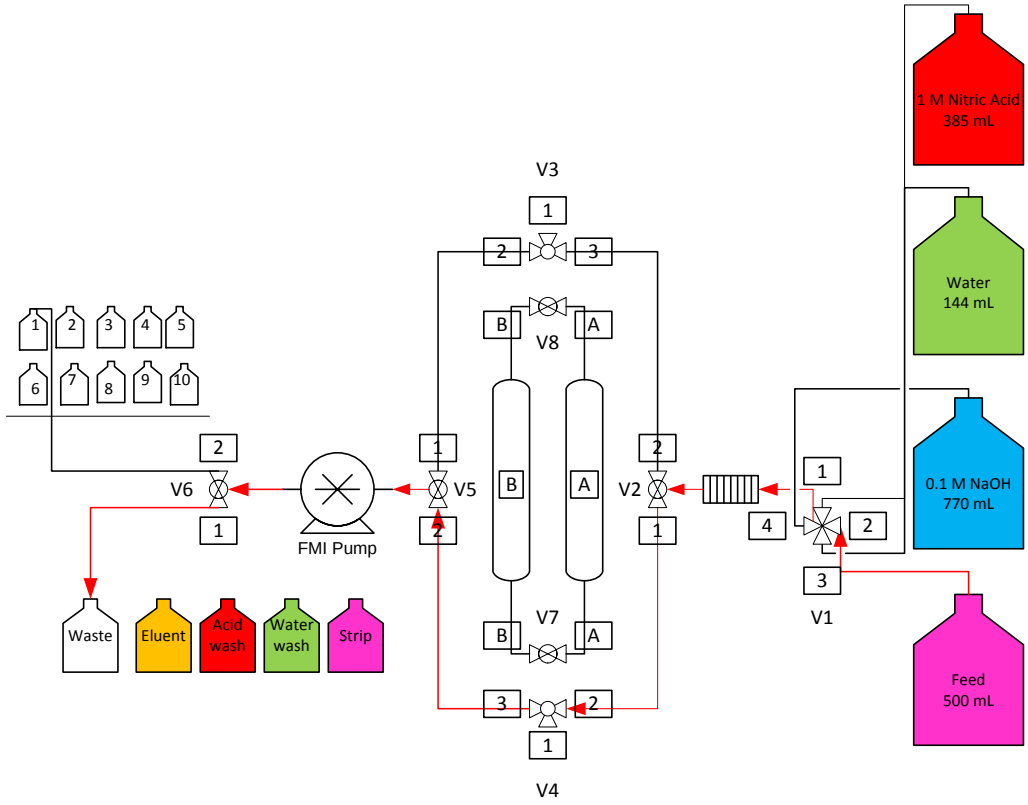

FIGURE 2 Flowchart for step 3 and 4

Step 5
Pre-equilibrate column
Step 5
V 1: open to 1
V 2: open to 1
V 3: open to 2
V 4: open to 2
V 5: open to 1
V 6: open to 1
Eluent line: waste bottle
Flow rate: 50 mL/min
Pump on
Time: 10 min
Pump off

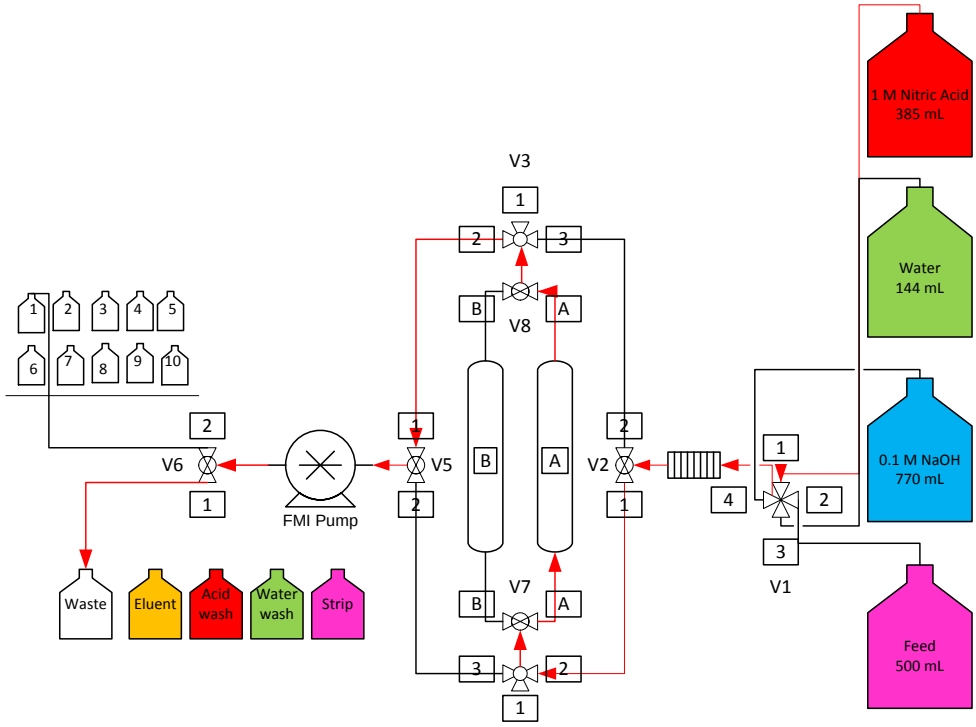

FIGURE 3 Flowchart for step 5

Step 6
Load feed, sample collection
Step 6
V 1: open to 2
V 2: open to 1
V 3: open to 2
V 4: open to 2
V 5: open to 1
V 6: open to 1
Eluent line: Eluent bottle
Place sample rack 1
Flow rate: 25 mL/min
Pump on
V6: switch to 2 every 1 min for 15 seconds. Switch between sample vials (1-16)
Visual: near empty feed bottle
Pump off

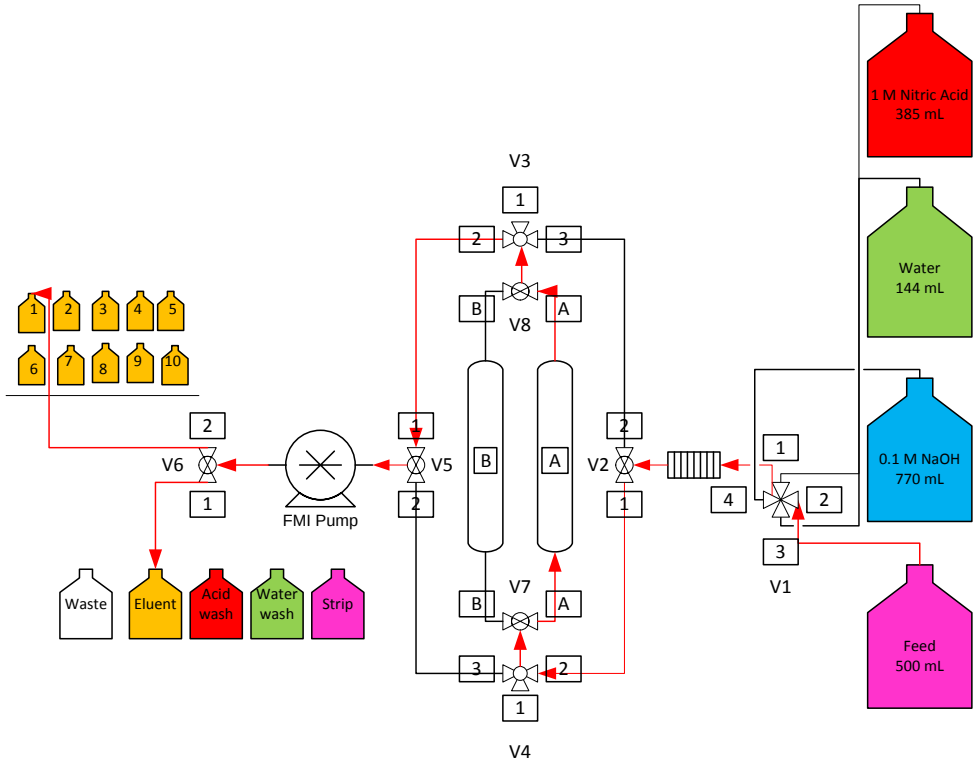

FIGURE 4 Flowchart for step 6

Steps 7-8
Load (1) acid wash, (2) water wash
Step 7
V 1: open to 1
V 2: open to 1
V 3: open to 2
V 4: open to 2
V 5: open to 1
V 6: open to 1
Eluent line: Acid wash bottle
Place sample rack 2
Flow rate: 50 mL/min
Pump on
V6: switch to 2 every 1 min for 15 seconds. Switch between sample vials (1-8)
Time: 8 min
Visual ~ 400 mL in Acid Wash bottle
Pump off

Step 8
V 1: open to 3
V 2: open to 1
V 3: open to 2
V 4: open to 2
V 5: open to 1
V 6: open to 1
Eluent line: Water wash bottle
Place sample rack 3
Flow rate: 50 mL/min
Pump on
V6: switch to 2 every 1 min for 15 seconds. Switch between sample vials (1-3)
Time: 3 min
Visual ~ 150 mL in Acid Wash bottle
Pump off

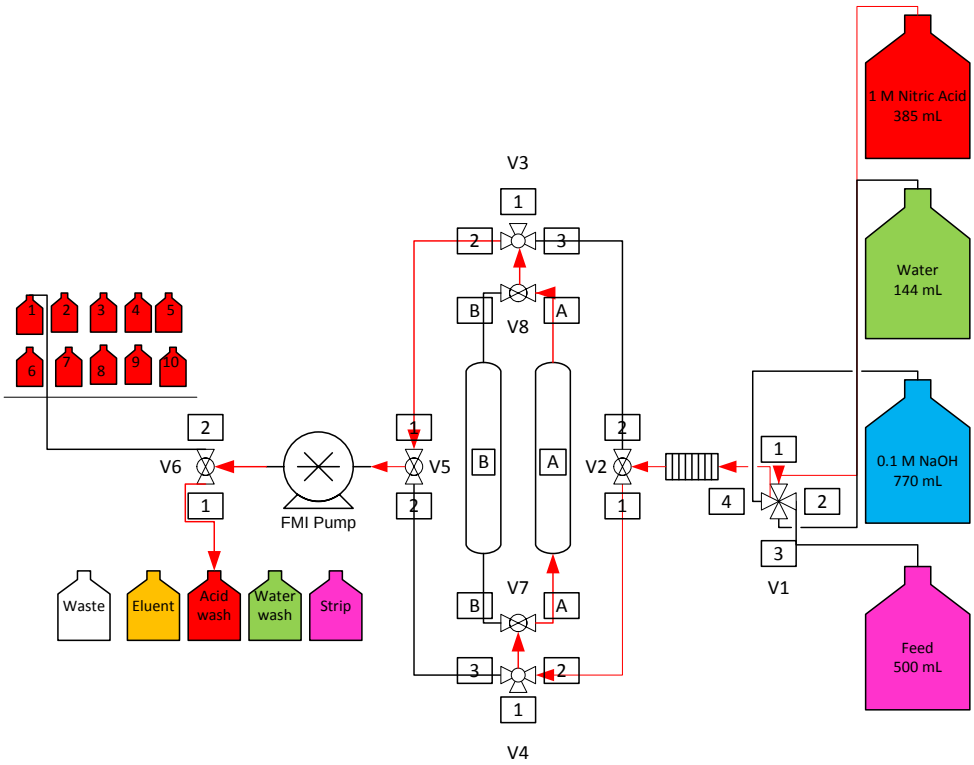

FIGURE 5 Flowchart for step 7 and 8

Step 9
Strip with sodium hydroxide
Step 9
V 1: open to 4
V 2: open to 2
V 3: open to 3
V 4: open to 3
V 5: open to 2
V 6: open to 1
Eluent line: Strip bottle
Place sample rack 4
Flow rate: 29 mL/min
Pump on
V6: switch to 2 every 3 minutes for 15 seconds. Switch between sample vials (1-9)
Time: 27 min
Visual ~ 700 mL in Strip 1 bottle
Pump off

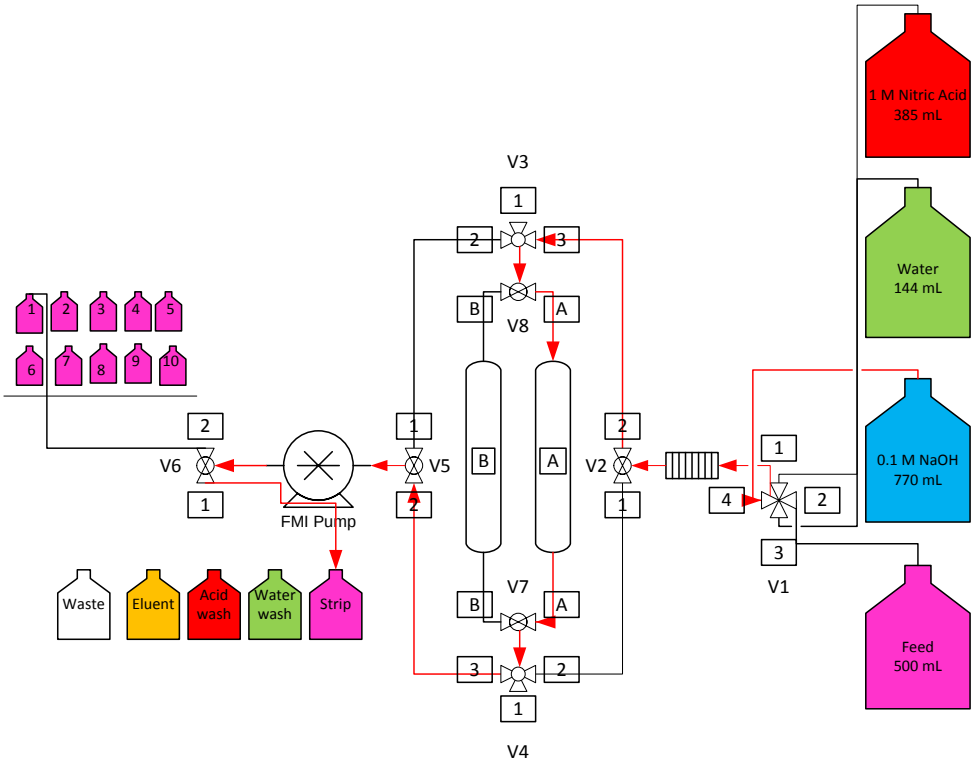

FIGURE 6 Flowchart for step 9

Post procedure

Weight collection bottles
Weight feed bottles
Sample feed for analytical
Sample solutions from collection bottles
Sample solutions from sample vials

APPENDIX C:

WORKING DRAFT (6/30/2013)
PROCEDURE FOR REMOTE OPERATION OF THE ELECTROCHEMICAL DISSOLVER SYSTEM

EQUIPMENT:

DISSOLUTION TANK	FEED TANKS	PRECIPITATION TANK	WASTE TANK
FILTER	VACUUM HEAD & PUMP	PRODUCT TANK	IODINE TRAP
N_2 GAS TANK	HEAT GUNS (2)	FILTER (2) WITH CAPS	PIPETTES
POWER SOURCE	+/- CABLES	TUBING	SCISSORS
SHAFT ROTOR (2)	LIQUID COLLECTION	HPGe GAMMA TUBES	THERMOCOUPLES
SCALE	PUMP	PRESSURE INDICATOR	

MATERIALS:

URANIUM FOIL in ALUMINUM CASING	SODIUM HYDROXIDE SOLUTION (1M, NaOH, 2L, A.C.S. certified)	SODIUM BICARBONATE SOLUTION (1M, $NaHCO_3$, 2L, A.C.S. certified)	CALCIUM OXIDE POWDER (CaO, 100g, A.C.S. certified)
NITROGEN GAS (N_2)			

CHEMICAL REACTIONS:

$$\mathrm{Al}(s) + \mathrm{NaOH}(l) + 3\mathrm{H_2O}(l) \rightarrow \mathrm{NaAl(OH)_4}(l) + \tfrac{3}{2}\mathrm{H_2}(g)$$

$$\mathrm{U}(s) \rightarrow \mathrm{U(VI)}(l) + 6\mathrm{e}^-$$

$$\mathrm{UO_2^{2+}}(l) + n\mathrm{CO_3^{2-}}(l) \rightarrow \mathrm{UO_2(CO_3)_n^{2-2n}}(l)$$

$$\mathrm{UO_2(CO_3)_n^{2-2n}}(l) + \mathrm{CaO}(s) \rightarrow \mathrm{NaCaUO_2(CO_3)_n}(s)$$

PROCEDURE:

Outside of Hot Cell

1. The process is fit onto a tray that is compatible with the crane inside of the hot cell.

2. Check connections and valves; all valves closed except **V-7** and **V-8**.

3. Electrical connections:
   a. Four (4) outlets (120V) accounted for and available inside hot cell.
   b. +/- cables fed through electrical tube outside of hot cell

c. Thermocouples connected (15’ of cable) for temperature monitoring.
d. Power source cable fed through hot cell
e. Shaft rotors (2) set to desired mixing rate
f. Heat guns set to desired position. One set to cool; one set to heat.

4. 100 g of calcium oxide is prepared and placed near the process.

5. The uranium cage is to be manually removed from the dissolver tank and placed nearby.

6. The process is loaded into the hot cell via crane connection to the mounting rig.

Inside of Hot Cell

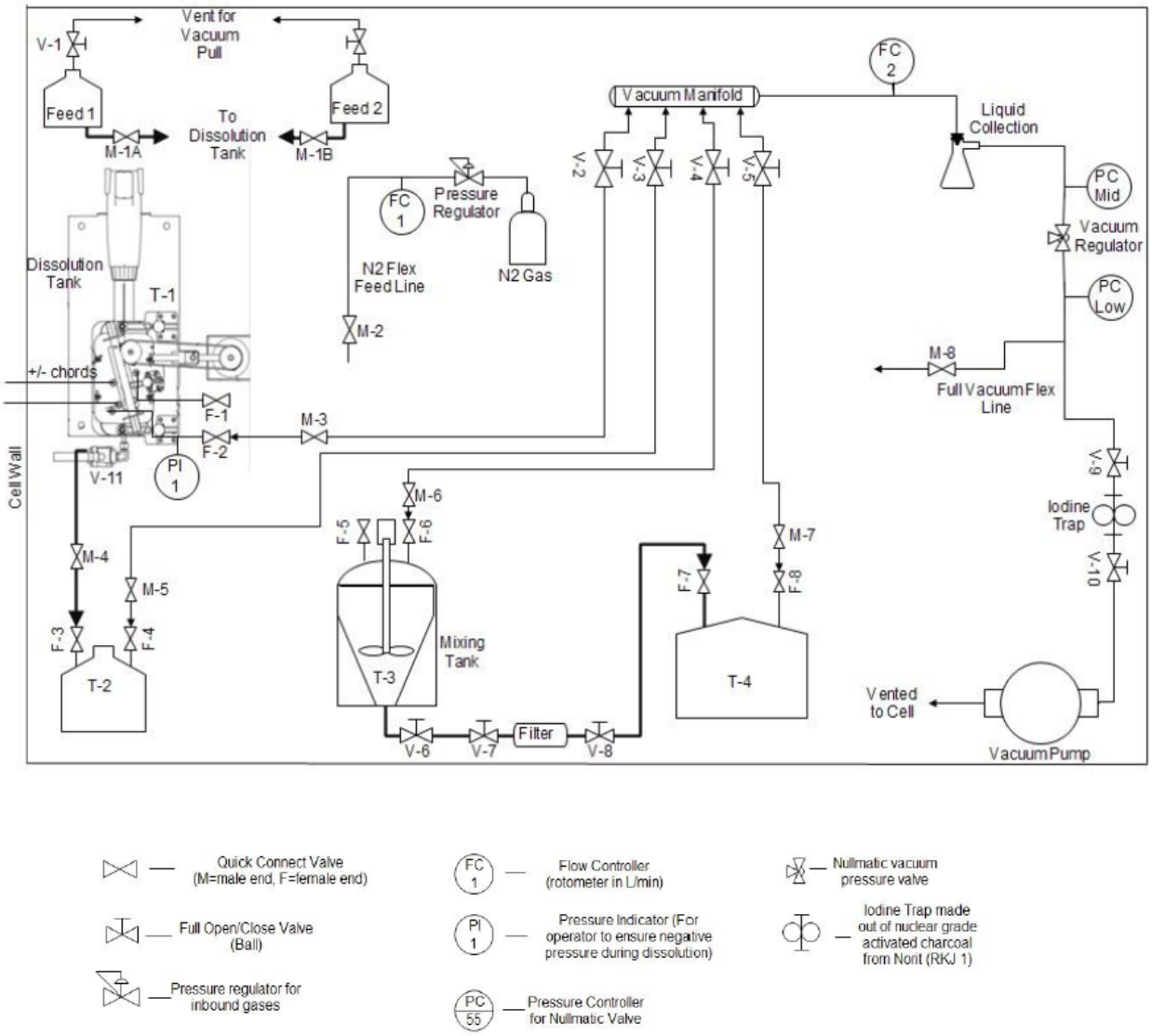

7. The **foil** is flattened using the manipulators, then placed into the cage, and the wing-nut is tightened. If the target does not flatten, it will be cut into smaller pieces such that the cage can be tightened.

8. The basket loaded with the irradiated **foil** is then lowered into the **dissolution tank**. The cage is sealed using the red-handle stoppers.

9. The **vacuum pump** is turned on. A negative pressure is indicated by the pressure indicator.

10. All valves **closed** except **V-7** and **V-8** which stay **open**.

11. The mixing rotor for **Tank 1** is turned on.

12. **M-1** is connected to **Feed Tank 1**.

13. **V-2** (open); **1.2L NaOH** enters the **dissolution tank**;

14. **V-2** (closed) when 1.2L has entered the tank.

15. **M-1** is disconnected when 1.2L has entered the tank.

16. **V-2** open. Negative Pressure verified by PI

17. **M-2** line connected to **T-1**. Verify negative pressure while flowing Nitrogen.

18. Add heat using hot gun to 60°C. Then remove hot gun.

19. **Twenty (20) minutes** is allowed for complete dissolution of the aluminum foil.

20. **M-4** connected to **T-2**.

21. **M-2** disconnected

22. **V-2** closed.

23. **V-3** open.

24. **V-11** open.

25. **V-3** closed when solution has moved to **T-2**.

26. **V-11** closed.

27. **M-1** connected to **Feed 2**.

28. **V-2** open. Negative pressure indicated by PI.

29. **V-2** closed when 0.5L has entered dissolver.

30. **M-1** disconnected

31. **M-4** connected to **F-5** (**T-3**).

32. **V-11** open.

33. V-4 open

34. **V-4** closed when liquid has moved.

35. **F-7** connected to **T-2**.

36. **V-3** open.

37. **V-6** open.

38. **0.5L** of **sodium bicarbonate** is flushed through the system to **T-2**.

39. **V-6** closed.

40. **V-3** closed.

41. **V-11** closed

42. Electrical cords are connected.

43. Heat guns are set to (1) cold and (2) hot.

44. **M-1** connected to **Feed 2**.

45. **V-2** open

46. **1.2 L** of **sodium bicarbonate** moves to **T-1**.

47. Dissolution proceeds. The voltage and temperature are maintained manually.
    a. T < 90°C – Alternate hot/cold guns and adjust voltage.
    b. V < 10 V
    c. Approximately 3 hours needed for dissolution.

48. **F-7** connected to **T-4**.

49. M-4 connected to **T-3**

50. **V-2** closed.

51. Shaft rotor for **T-3** turned on.

52. **V-11**.

53. **V-4** open to move dissolved U/Mo solution.

54. **V-4** closed when all liquid has moved.

55. CaO introduced to mixing tank.

56. Approximately 10 minutes allowed for mixing.

57. **V-5** open

58. **V-6** open

59. V-5 closed when all liquid has moved.

60. Pump turned off.

61. Filter and product solution (**T-4**) sent to analytical.

Dissolution Tank

Mixing Tank

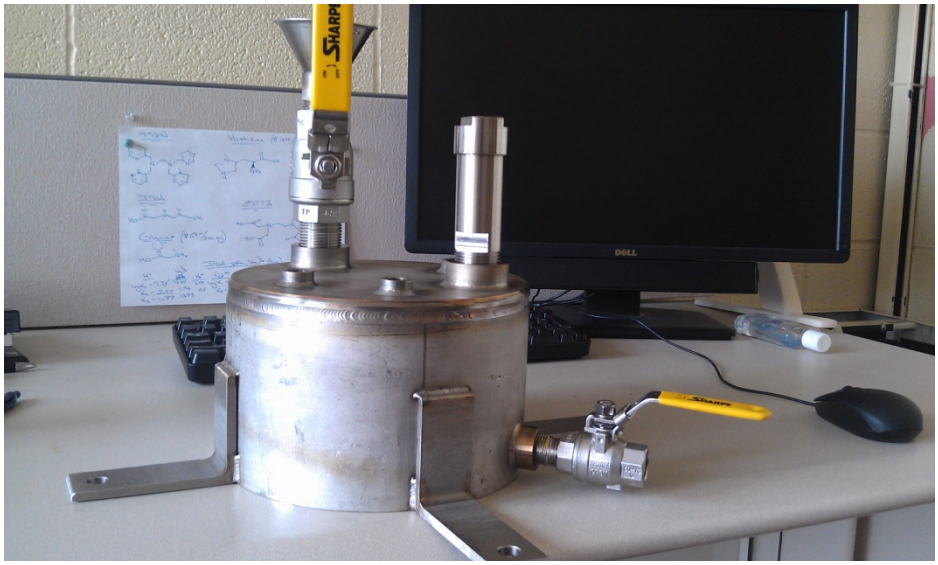

Mounting Device with Mixing Tank, Product Tank, Pump:

Full Process: Front View

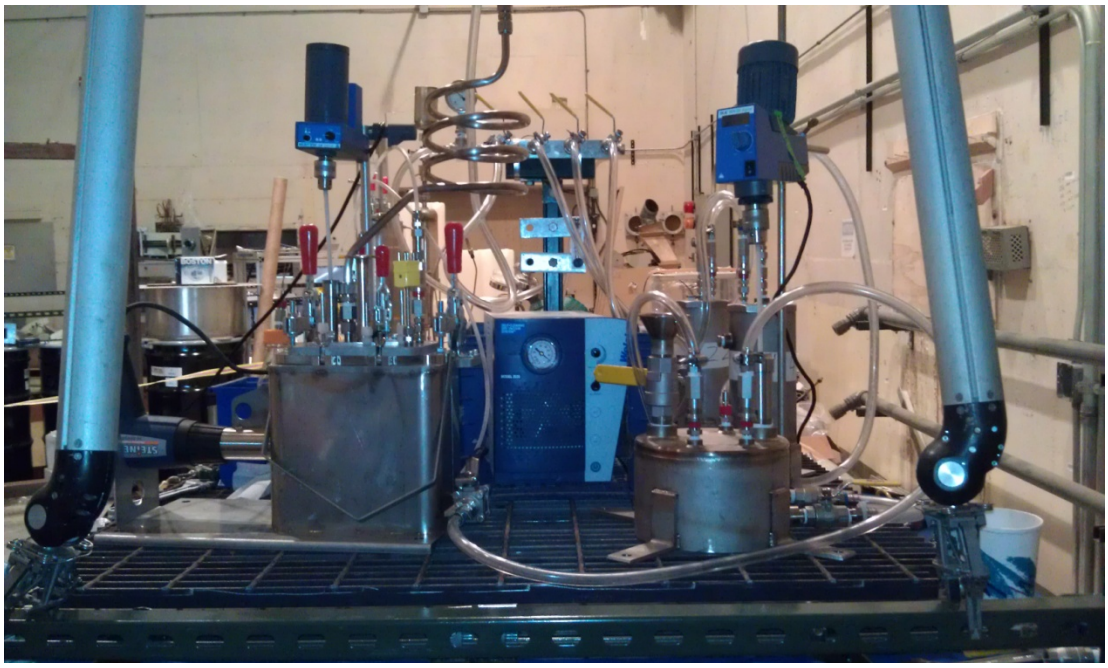

Electrical Equipment:

Heat Gun:

Mixer:

Vacuum Pump:

MODEL NO. 202501
DATE/ SERIAL NO. 091000000674
RATED FOR: 115V 1.5A 60Hz
WIRED FOR:
WELCH
A Gardner Denver Product
GARDNER DENVER WELCH VACUUM TECHNOLOGY, INC.
MONROE, LOUISIANA U.S.A.
Service Repair Phone: (847) 676-5800
REPLACE WITH 3A—250V AC FUSE ONLY

Chemical Science and Engineering Division
Argonne National Laboratory
9700 South Cass Avenue, Bldg. 205
Argonne, IL 60439-4837

www.anl.gov

Argonne National Laboratory is a U.S. Department of Energy
laboratory managed by UChicago Argonne, LLC