ANL-ARC-230

Na-CO_2 Interactions Experiment (SNAKE): FY 2012 Update on Facility Assembly and Sodium Loading

Nuclear Engineering Division

About Argonne National Laboratory
Argonne is a U.S. Department of Energy laboratory managed by UChicago Argonne, LLC under contract DE-AC02-06CH11357. The Laboratory's main facility is outside Chicago, at 9700 South Cass Avenue, Argonne, Illinois 60439. For information about Argonne and its pioneering science and technology programs, see www.anl.gov.

DOCUMENT AVAILABILITY

Online Access: U.S. Department of Energy (DOE) reports produced after 1991 and a growing number of pre-1991 documents are available free via DOE's **SciTech Connect** (http://www.osti.gov/scitech/)

Reports not in digital format may be purchased by the public from the National Technical Information Service (NTIS):

U.S. Department of Commerce
National Technical Information Service
5301 Shawnee Rd
Alexandra, VA 22312
www.ntis.gov
Phone: (800) 553-NTIS (6847) or (703) 605-6000
Fax: (703) 605-6900
Email: **orders@ntis.gov**

Reports not in digital format are available to DOE and DOE contractors from the Office of Scientific and Technical Information (OSTI):

U.S. Department of Energy
Office of Scientific and Technical Information
P.O. Box 62
Oak Ridge, TN 37831-0062
www.osti.gov
Phone: (865) 576-8401
Fax: (865) 576-5728
Email: **reports@osti.gov**

Disclaimer
This report was prepared as an account of work sponsored by an agency of the United States Government. Neither the United States Government nor any agency thereof, nor UChicago Argonne, LLC, nor any of their employees or officers, makes any warranty, express or implied, or assumes any legal liability or responsibility for the accuracy, completeness, or usefulness of any information, apparatus, product, or process disclosed, or represents that its use would not infringe privately owned rights. Reference herein to any specific commercial product, process, or service by trade name, trademark, manufacturer, or otherwise, does not necessarily constitute or imply its endorsement, recommendation, or favoring by the United States Government or any agency thereof. The views and opinions of document authors expressed herein do not necessarily state or reflect those of the United States Government or any agency thereof, Argonne National Laboratory, or UChicago Argonne, LLC.

ANL-ARC-230

Na-CO_2 Interactions Experiment (SNAKE): FY 2012 Update on Facility Assembly and Sodium Loading

Craig Gerardi, Mitchell T. Farmer, Dennis J. Kilsdonk, James J. Sienicki, and Christopher Grandy
Nuclear Engineering Division
Argonne National Laboratory

July 2012

ABSTRACT

The U.S. Department of Energy (U.S. DOE) Advanced Reactor Concepts (ARC) Program is developing the Sodium-Cooled Fast Reactor (SFR) as a reactor that could dramatically improve performance in sustainability, safety, economics, security, and proliferation resistance. The near-term Program goal is to reduce technical barriers (e.g., by resolving key feasibility and performance challenges) to improve the prospects of advanced technology reactor systems. In the long-term, integrated advanced reactor system designs will be developed that implement the chosen missions and complete the testing and demonstration necessary for licensing. The supercritical carbon dioxide (S-CO_2) Brayton cycle, coupled with an SFR, has been identified as a new and innovative energy conversion technology that could contribute to meeting these objectives.

One appealing feature of this energy conversion system is the smaller footprint that the hardware requires relative to the traditional superheated steam cycle, which is in part due to the use of Printed Circuit Heat Exchanger™ (PCHE™) compact diffusion-bonded heat exchangers as the heat source heat exchanger (sodium-to-CO_2) as well as the recuperator and cooler modules. Although PCHEs have a high degree of structural integrity, the potential for leak(s) to develop between the sodium and CO_2 coolant channels in the secondary heat exchanger cannot be ruled out, leading to discharge of high pressure CO_2 into the secondary coolant circuit. Due to the robustness of the PCHE design, catastrophic failure leading to gas jet blowdown into the intermediate sodium loop is not deemed likely. Rather, small crack(s) (or micro-leaks) may develop in which CO_2 will bleed into the secondary system at a relatively low rate and chemically react with the sodium. The 2012 Sodium Fast Reactor Research Plan produced by Sandia National Laboratory (Denman et al., 2012) identified the interaction between sodium and CO_2 as being among the highest priority areas of research for SFR accident initiators. In fact, the report rated both the experimental database and modeling capabilities of Na-CO_2 interactions as the lowest current state of knowledge compared with the other listed high-priority accident initiator items.

In recognition of the anticipated failure mode for a PCHE sodium-to-CO_2 heat exchanger, an experiment program at Argonne was initiated in FY 2010 to investigate the reaction characteristics between sodium and CO_2 under micro-leak conditions. This report provides an update on the facility assembly and sodium loading. Assembly of the SNAKE (S-CO_2, Na Kinetics Experiment) is complete. Approximately 44 lbs (20 kg; ~21 L/5.5 gal) of sodium have been transferred into the SNAKE dump tank from a drum of clean sodium. Work still continues on preparing the rest of the system for sodium readiness.

The goal of the SNAKE facility is to:

1. Determine the nature and extent of the chemical reactions that occur between high-pressure CO_2 issuing into liquid sodium from a micro leak across a stainless steel pressure boundary as a function of the sodium pool temperature and inlet CO_2 flowrate,
2. Examine the potential for the micro-leak to seal itself up as a result of blockage formation from the chemical reaction byproducts of the Na-CO_2 reaction, or as a result of oxide layer buildup on the crack faces,

3. Develop one-dimensional phenomenological models for the interactions between high-pressure CO_2 issuing into liquid sodium from a micro leak across a stainless steel pressure boundary. These models will be validated using the experiment data obtained during the completion of the previous two objectives.

A number of new analyses have been completed to support the safety case for the operation of this experiment facility, which are included in this report. The facility itself has been designed to be flexible to accommodate other types of testing in the future. Many of the facility components are modular and include a number of extra fittings for diversity.

Assembly of the initial facility and sodium loading was completed in July 2012. Initial facility shakedown and the first experiment are anticipated to take place in the September 2012 timeframe, along with a summary report. Fiscal Year 2013 will consist of obtaining the complete experiment data matrix and making additional hardware improvements to improve data quality, with a detailed report delivered in September 2013. Model development and validation will take place the following Fiscal Year, with a detailed model report anticipated to be delivered in September 2014.

Table of Contents

Abstract i

List of Figures iv

List of Tables v

1 Introduction 1

1.1 Background 1
Approach 5

2 Facility Design Description 6

Facility Design 9

3 FY 2012 Status 14

Sodium Loading Completed 14
Safety Case Made 16
Miscellaneous activities 16

4 Safety & Miscellaneous Analyses 21

Sodium 21
High temperature 23
Pressure 24
Electrical 29
Toxic gas 29
Estimate time to drain test vessel 30

5 Summary 32

References 34

LIST OF FIGURES

Figure 1: Schematic Illustration of a S-CO_2 Brayton Cycle Power Conversion System Coupled to a Pool-Type SFR. 1
Figure 2: Schematic of potential microcrack formation mechanism in a PCHE and subsequent sodium-CO_2 reaction. 3
Figure 3: Updated schematic showing key components of the sodium-CO_2 reaction test facility. 7
Figure 4: Updated drawing of sodium components of the sodium-CO_2 reaction test facility. 8
Figure 5: Recent picture of fully-assembled SNAKE facility. 9
Figure 6: (left) Drawing of CO_2 micro-nozzle connected to high-pressure gas delivery line in a cutaway of the test vessel and (right) picture of one of the fabricated nozzles. 11
Figure 7: Test vessel with a researcher below for scale. 12
Figure 8: CO_2 Pre-heater installed near test section 13
Figure 9: (left) Picture of dump tank wrapped in a layer of flexible alumina insulation and (right) picture of stainless box with dump tank inside. 13
Figure 10: Photograph of sodium storage drum (right) hooked up to SNAKE sodium dump tank (left) in order to transfer sodium. The drum insulation has been in place for several decades, and a positive Argon pressure has been maintained above the solid sodium in the drum in order to limit oxidation. 15
Figure 11: Mass spectrometer mounted on outside of SNAKE facility. The duct that runs to the scrubber is pictured at the top, while two wire terminal boxes that contain the heater controller wires are located above the mass spectrometer. 17
Figure 12: Heater tape wrapped around the tubing and valves that run between the test section (top right) and dump tank (not pictured – bottom left). The emergency dump valve is located in the center of the photograph. 18
Figure 13: Control rack with National Instruments chassis on top, valve control panel in the middle, and instrument power near the bottom. 19
Figure 14: Assembled state of the SNAKE facility as of July 2012 (4 front doors are removed to view interior). 20
Figure 15: Photograph of SNAKE experiment with all stainless steel enclosure doors in place. 22
Figure 16: Sketch of test vessel draining problem 30

LIST OF TABLES

Table 1: SNAKE Facility Specifications 6
Table 2: Anticipated timeline for Na-CO_2 experiment program. Completed portions of tasks are colored in black, while uncompleted tasks are gray. Deliverable reports timeframes are marked with a yellow dot. 14
Table 3: Rupture disk parameters 25
Table 4: Regulator delivery pressures 26
Table 5: Adjustable relief valve pressures 27
Table 6: Component pressure and temperature ratings 28
Table 7: Form loss coefficients 31
Table 8: Drain time estimates 32

1 Introduction

1.1 Background

The U.S. Department of Energy (U.S. DOE) Advanced Reactor Concepts (ARC) Program is developing the Sodium-Cooled Fast Reactor (SFR) as a reactor that could dramatically improve performance in sustainability, safety, economics, security, and proliferation resistance. The near-term Program goal is to reduce technical barriers (e.g., by resolving key feasibility and performance challenges) to improve the prospects of advanced technology reactor systems. In the long-term, integrated advanced reactor system designs will be developed that implement the chosen missions and complete the testing and demonstration necessary for licensing. The supercritical carbon dioxide (S-CO_2) Brayton cycle, coupled with an SFR, has been identified as a new and innovative energy conversion technology that could contribute to meeting these objectives. This system, depicted schematically in Figure 1, removes energy from the intermediate sodium circuit in a pool-type reactor plant or the primary or intermediate sodium circuit in a loop-type plant and converts it into electrical energy at greatly improved thermal efficiencies over comparable Rankine cycle conversion schemes depending upon the reactor core outlet sodium temperature). The S-CO_2 Brayton cycle was identified as the primary energy conversion system of interest under the ARC Program and evaluation of the chemical reactions between the reactor coolant and balance of plant fluid was specifically mentioned as a program goal (ARC, 2011).

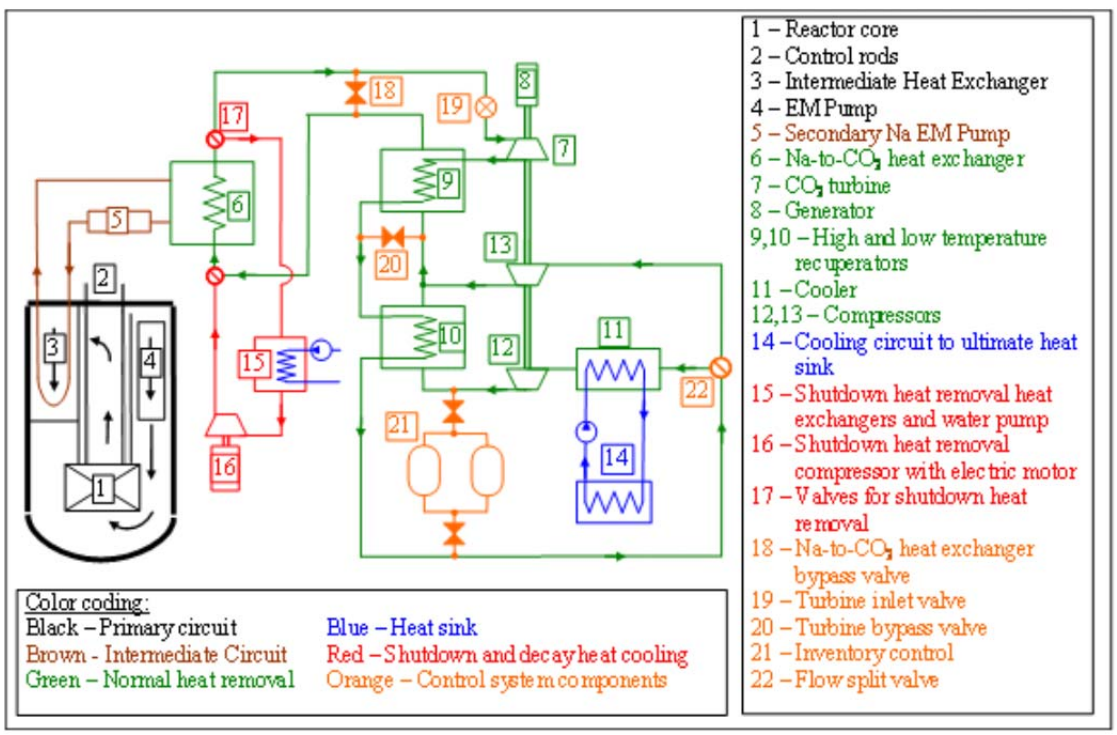

Figure 1: Schematic Illustration of a S-CO_2 Brayton Cycle Power Conversion System Coupled to a Pool-Type SFR.

A major benefit of the S-CO_2 Brayton cycle is elimination of the potential for energetic sodium-water reactions which result in the formation of combustible hydrogen gas. Desirable attributes for this system include: 1) reduction in power conversion system costs relative to the Rankine steam cycle by taking advantage of the small sizes of the turbine and compressors as well as the fewer number of components [i.e., the condenser, feedwater heaters, and deaerator of the Rankine cycle are eliminated]; and 2) higher thermal efficiency relative to the Rankine steam cycle especially at the higher reactor core outlet temperatures of some sodium-cooled fast reactor concepts.

Operating pressures are 20 MPa or higher at the compressor outlets and remain above the CO_2 critical pressure of 7.377 MPa at the compressor inlets during normal operation at nominal load. The CO_2 temperature remains above the CO_2 critical temperature of 30.98 °C during normal operation. The components including the turbine and compressors must be manufactured from alloys that are resistant to corrosive oxidation attack by CO_2 while also meeting other structural requirements.

One feature contributing to footprint reduction for this system is the use of Printed Circuit Heat Exchangers (PCHEs) (Li et al., 2006) as the heat source heat exchanger (Na-to-CO_2) as well as the recuperator and cooler modules. PCHEs are high integrity plate type heat exchangers that are fabricated from flat metal plates that have fluid flow channels formed via chemical etching using a process similar to that developed for electronic printed circuit board production. The etched plates are stacked and diffusion bonded together to make the core of the heat exchanger. These units can be four to six times smaller than conventional shell and tube heat exchangers of the equivalent heat duty, and they can have pressure and temperature capabilities in excess of 600 bar and 900°C, respectively.

Although PCHEs have a high degree of structural integrity, the potential for leak(s) to develop between the sodium and CO_2 coolant channels in the secondary heat exchanger cannot be ruled out, leading to discharge of high pressure CO_2 into the secondary coolant circuit. Due to the robustness of the PCHE design, catastrophic failure leading to gas jet blowdown into the secondary sodium loop is not deemed to be a likely scenario. Heatric claims that the pressure-boundary failure mechanism consists only of slow leakage due to the formation of small cracks between the streams (Chang et al., 2006). It is expected that small crack(s) (or micro-leaks) may develop in which CO_2 will bleed into the sodium at a relatively low rate and chemically react with the sodium (see Figure 2 for a schematic of this interaction). The former (gas jet) scenario is more relevant for shell-and-tube heat exchanger designs that do not have the monolithic construction features characteristic of PCHEs. Modeling and experiments addressing this case have been carried out by Gicquel et al. (2010) and Gerardi et al. (2010). The primary focus of the current work is to develop an experiment capability to investigate reaction characteristics under micro-leak conditions. Some research (Eoh et al., 2010) on microcrack leaks of CO_2 into sodium has been carried out by the Korea Atomic Energy Research Institute (KAERI) subsequent to the initiation of the current project. Some important distinctions between the KAERI work and the current project include the CO_2 injection pressure (the KAERI work had a maximum CO_2 pressure of 55 bar, vs. 200 bar for the current project), sodium pool height (~0.4 m for the KAERI work, vs. ~1.0 m for the current project), and the crack size investigated (the KAERI work evaluated sizes greater than 300 microns, while the present work will examine sizes as low as 50 microns).

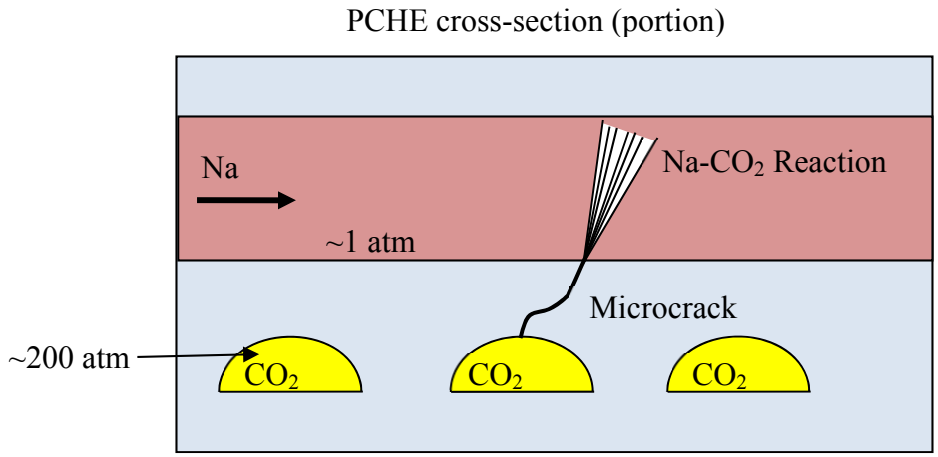

Figure 2: Schematic of potential microcrack formation mechanism in a PCHE and subsequent sodium-CO_2 reaction.

As discussed by Gicquel et al. (2010), two Na-CO_2 chemical reaction scenarios are possible. In particular, for a temperature below ~ 500 ºC, the CO_2 reacts with sodium, principally forming sodium oxalate ($Na_2C_2O_4$) and carbon monoxide (CO). The oxalate then further reacts with the sodium to form oxide (Na_2O). The reactions are of the form (Gicquel et al., 2010),

$$\begin{aligned} &Na + CO_2 \rightarrow \frac{1}{4} Na_2C_2O_4 + \frac{1}{4} CO + \frac{1}{4} Na_2CO_3 \\ &4Na + Na_2C_2O_4 \rightarrow 3Na_2O + CO + C \end{aligned} \tag{1}$$

The carbonate is effectively inert in the sodium, remaining as a solid solution that can precipitate out within the system with potentially undesirable consequences. Oxygen is normally present in the coolant at ppm levels; the oxide may decompose or remain in solution depending upon the oxygen potential in the coolant. The CO can react with sodium also, but the kinetics of this reaction are much slower than the sodium-oxalate reaction (Gicquel et al., 2010) and so the potential exists for the monoxide to loiter in the solution for some (undetermined) length of time, possibly passing out of the system as a gas that could accumulate at high points in the secondary sodium loop.

As noted earlier, above ~ 500 ºC the Na-CO_2 reaction takes a different form. In particular, the sodium rapidly reacts with the gas to form elemental carbon as well as carbonate; i.e. (Gicquel et al., 2010),

$$Na + \frac{3}{4} CO_2 \rightarrow \frac{1}{4} C + \frac{1}{2} Na_2CO_3 \tag{2}$$

As is evident from this equation, in this temperature regime there is no gaseous byproduct from the reaction. Moreover, the carbonate remains as an inert solid in solution with the sodium.

The above discussion indicates that if a small leak in a compact heat exchanger were to develop, then solid byproducts (principally sodium carbonate) will be formed below ~ 500 ºC. One question that arises is whether or not the carbonate that forms could possibly plug the leak over time, yielding the beneficial outcome that the small leaks are self-healing. Potential also exists for oxide buildup on such a small crack due to the high temperature CO_2 passing stainless steel, and for enlargement of small cracks due to high thermal stresses near the nozzle due the Na-CO_2 reaction. These are some off the principal questions to be addressed as part of this work, along with evaluating the chemical reaction characteristics under low flow conditions.

International work on Na-CO_2 interactions

As alluded to above, several other research organizations are in the process of developing experiment and modeling capabilities to understand the sodium-CO_2 reaction. The primary organizations studying this reaction are the Korea Atomic Energy Research Institute (KAERI) and the Commissariat à l'énergie atomique (CEA).

The CEA work (Gicquel et al., 2010; Gicquel et al., 2011) primarily is focused on larger breaks typical of a shell-and-tube type rupture (jetting), and has been carried out at subcritical pressures. No plans to study the effect of CO_2 pressure on the reaction are planned. They are currently developing an analytical model for CO_2 jetting into a pool of sodium, which includes a reaction model. At this time, their model does not do a good job of predicting the experiment results. They do report a threshold temperature of approximately 500 ˚C, above which the reaction becomes extremely energetic. Their jetting experiments include a mass spectrometer to evaluate carbon monoxide production, and some calorimetric work was completed to evaluate the reaction enthalpies. Their modeling work consists of modifying and improving existing steam jetting into sodium models. This work includes extensive evaluation of the velocities and temperatures throughout the jet, which is the validation objective of their experiments. The model is complicated by the three-phase nature of the reaction and the complicated kinetics of the primary reactions.

The KAERI work (Eoh et al., 2010) is examining two issues: 1) wastage of stainless steel in a sodium pool due to impact by a CO_2 jet, and 2) understanding the reaction between sodium and CO_2. The first issue is important for both shell-and-tube heat exchangers and PCHEs in that a single failure could cascade into multiple tube (or channel) ruptures should the wastage effect be strong. However, this issue is beyond the scope of the present work. The second issue that KAERI is studying is very much related to the present work. They have done simple surface reaction tests by blowing CO_2 across the surface of a large sodium pool over a large range of temperatures (200 ˚C – 600 ˚C). They used a mass spectrometer to analyze the reaction gases and several diagnostic approaches to examine the solid reaction products after each test. While these tests are not prototypic of PCHEs, they add much to the knowledge base regarding the reaction itself, including kinetic parameters. They also have an experiment program investigating more PCHE prototypic geometries and conditions. They have injected gas bottle pressure (5.5 MPa) CO_2 at several temperatures (400 ˚C & 550 ˚C) through small holes (down to 0.3 mm) into a small diameter (2 mm) sodium channel. These

channels did not plug after several minutes of CO_2 injection. Lastly, they have injected low pressure (0.5 MPa) CO_2 through larger cracks (0.5-1.5 mm) into sodium pools at a range of temperatures (300 ˚C – 600 ˚C). Some plugging of the smaller nozzles (<1.5 mm) as seen for low initial leak rates at high temperatures (> 500 ˚C).

There is a clear niche for obtaining data for truly prototypic heat source heat exchanger conditions namely at high pressure (20.0 MPa) and for small crack sizes (< 100 μm), which the present project will attempt to provide.

Approach

The purpose of this work is to develop the capability to conduct well-controlled experiments that can achieve the following two technical objectives:

4. Determine the nature and extent of the chemical reactions that occur between high-pressure CO_2 issuing into liquid sodium from a micro leak across a stainless steel pressure boundary as a function of the sodium pool temperature and inlet CO_2 flowrate,
5. Examine the potential for the micro-leak to seal itself up as a result of blockage formation from the chemical reaction byproducts of the Na-CO_2 reaction, or as a result of oxide layer buildup on the crack faces,
6. Develop one-dimensional phenomenological models for the interactions between high-pressure CO_2 issuing into liquid sodium from a micro leak across a stainless steel pressure boundary. These models will be validated using the experiment data obtained during the completion of the previous two objectives.

The experiment approach for achieving these objectives is to construct a well-instrumented test facility that consists of a vessel containing molten sodium with a test specimen that mocks up a micro-crack in a PCHE located at the bottom of the pool. High-pressure CO_2 is bled through the crack under controlled (i.e., constant pressure and temperature) conditions; flowrate through the crack is monitored over time to determine if the crack plugs and, if so, the rate at which plugging occurs. The gas composition is monitored with a gas mass spectrometer to determine the gaseous byproducts that are expected to evolve from the chemical reactions described above; local sodium temperatures around the crack are also monitored. Post-test examination of solid reaction products will also be possible. Aside from examining the potential for a micro-crack to plug, these data provide additional information to validate the proposed chemical reaction sequences given by Gicquel et al. (2010) that were outlined above.

The balance of this report describes progress made towards meeting these objectives so far this fiscal year. An experiment facility called SNAKE (S-CO_2, Na Kinetics Experiment) has been designed and assembled in the Building 206 High-Bay at Argonne National Laboratory. A summary of the underlying scaling rationale and facility design was provided in (Gerardi et al., 2012). This report describes the completion of assembly and loading of sodium during FY 2012. Planning for the modeling approach to complete objective 3 will be prepared in FY 2013, while actual modeling and validation work will begin in FY 2014. No further discussion of modeling plans will be made in the present report.

2 Facility Design Description

An initial design description was provided in 2010 (Farmer et al., 2010) for a facility focused on investigating sodium-CO_2 reactions under conditions that mock up a small leak within a PCHE. That document provided the starting point for further design improvements, detailed specifications, and purchases in FY 2011. The changes and improvements in the facility design made in FY 2011 were detailed in Gerardi et al. (2011). This report focuses only on changes to the design made since the FY 2011 report.

A schematic and three dimensional rendering of the SNAKE facility are provided in Figure 3 Figure 4, respectively. Key features and specifications for the facility are summarized in Table 1. A recent picture of the facility fully assembled is shown in Figure 5.

Table 1: SNAKE Facility Specifications

Parameter	Value
General	Sodium-CO_2 chemical reaction experiment
Overall facility height	3.65 m (12 ft)
Maximum temperature and pressure rating of sodium vessels	3.1 MPa (450 psi) at 510 ˚C
Maximum CO_2 gas pressure	20.6 MPa (3000 psi)
CO_2 nozzle diameter range	60-100 µm
Maximum sodium column pool height as currently configured	0.80 m (2.6 ft)
Maximum CO_2 volumetric flowrate	5.8 slpm
Sodium column diameter	10 cm (4 inches)
Key Instruments	1) CO_2 flowmeter with 0.5-2.4% measurement uncertainty 2) Mass spectrometer for analyzing exhaust gasses 3) Wireless pressure transmitters for line pressures 4) Laser level indicator for sodium level in test vessel 3) Thermocouples at nozzle tip, near nozzle outlet in sodium, and throughout system
Approximate total facility sodium mass	22 kg (40 lb); approximately 21 L (5.5 gallons);
Approximate test vessel sodium volume	9.5 L (2.5 gallons); approximately 8.5 kg (19 lb)
Approximate total heater input power	~ 15 kW

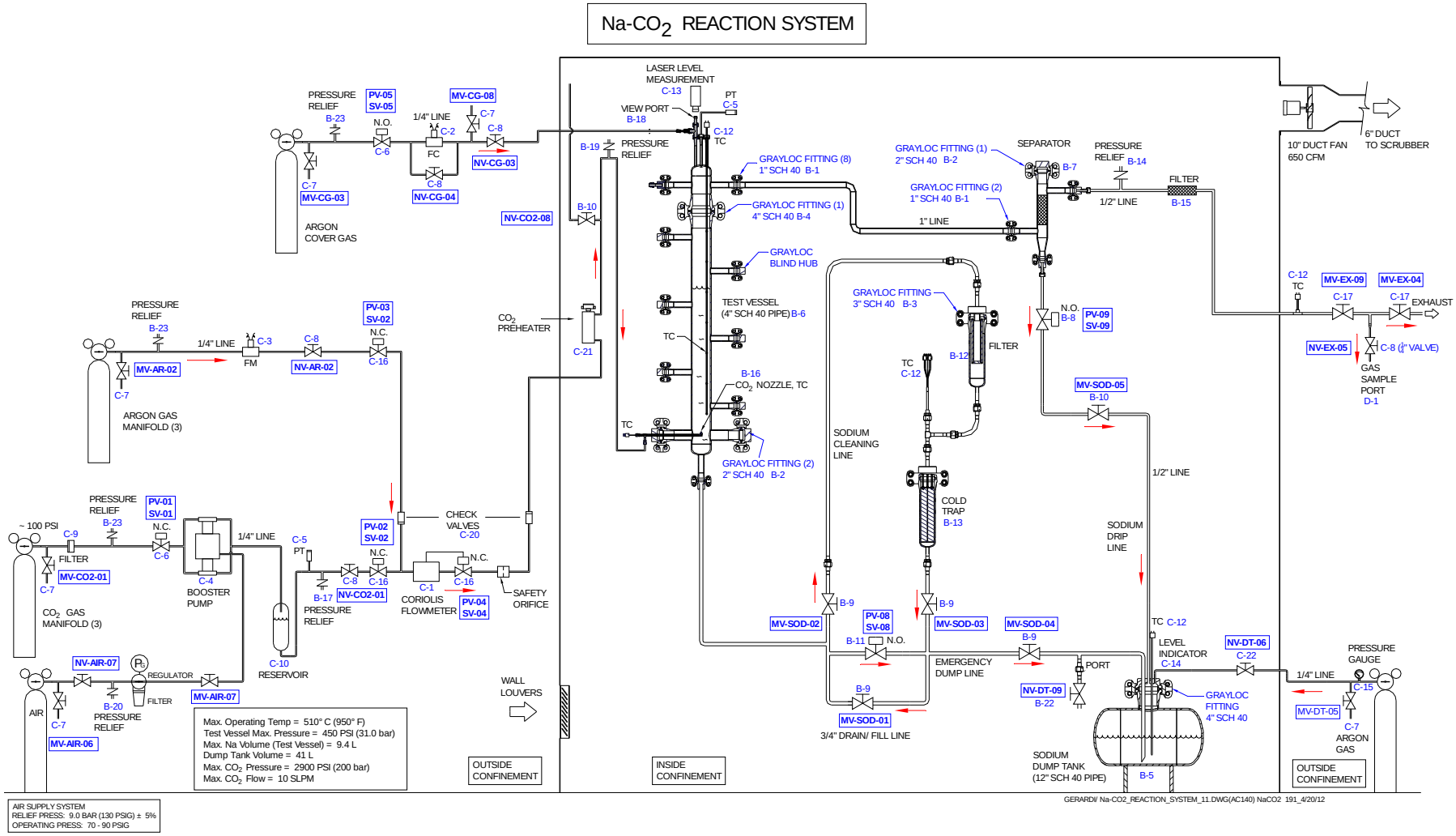

Figure 3: Updated schematic showing key components of the sodium-CO_2 reaction test facility.

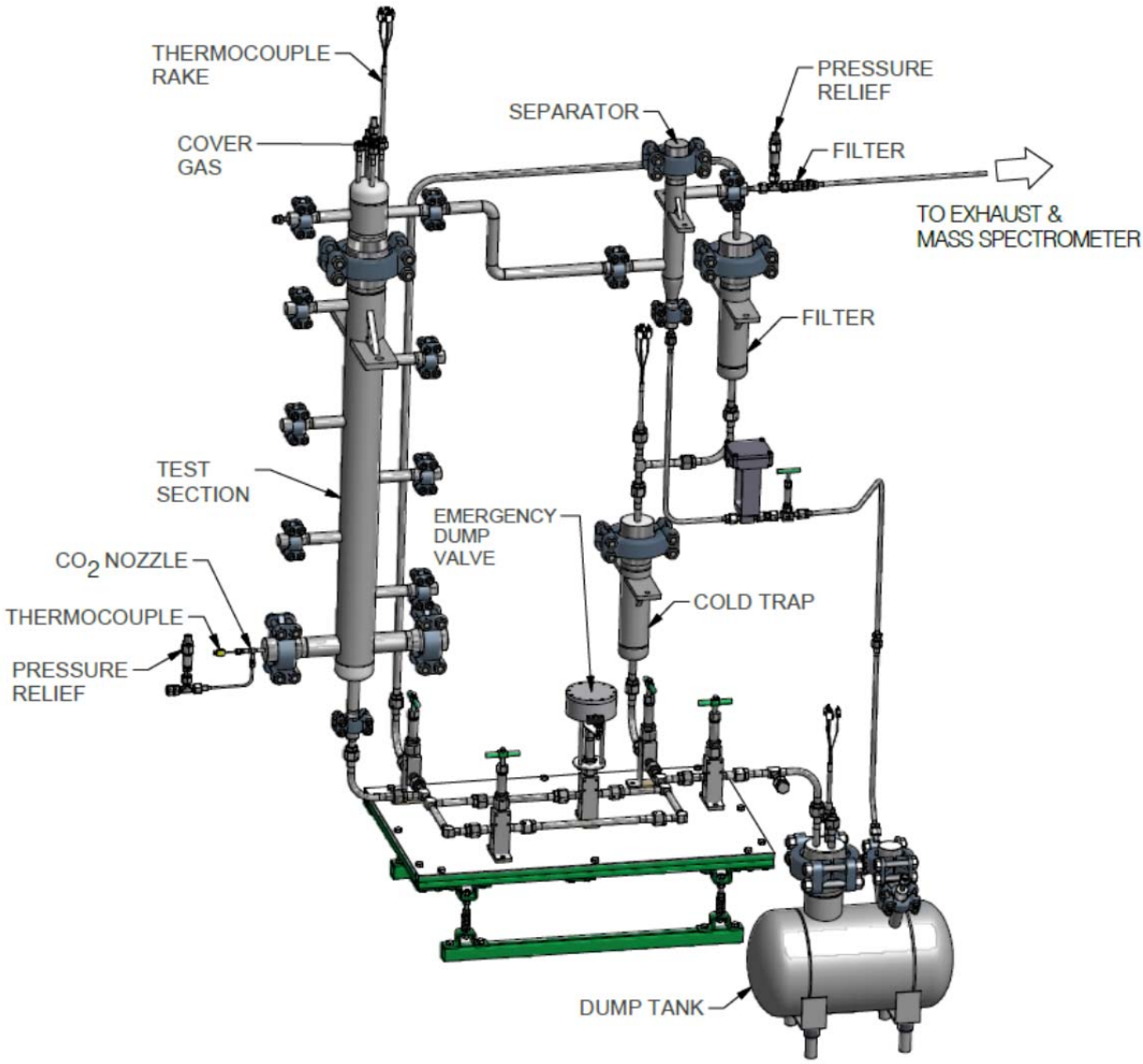

Figure 4: Updated drawing of sodium components of the sodium-CO_2 reaction test facility.

Figure 5: Recent picture of fully-assembled SNAKE facility.

Facility Design

As shown in Figure 4 (schematic in Figure 3), the key elements of the test facility consist of the:

i. test vessel,
ii. argon cover gas supply,
iii. CO_2 supply system to the test nozzle that simulates a leak site in a PCHE,
iv. argon supply system to the test nozzle to prevent sodium plugging prior to CO_2 flow initiation,
v. sodium dump system including a filter/cold trap to clean sodium and capture solid reaction products,
vi. off gas system,
vii. confinement system to direct smoke from any accidental sodium spill to the building scrubbing unit,
viii. instrumentation (flow meters, pressure transmitters, level measurement, thermocouples, mass spectrometer, etc.)

One of the key changes made during FY 2012 to the design of the SNAKE experiment was to re-configure the CO_2 injection nozzle. The geometry of the old design (coiled tube inside of the 2" pipe penetration at the bottom of the test vessel) was deemed likely to make nozzle removal and replacement difficult once exposed to sodium. This is because sodium can easily remain in gaps of less than ½" between components even after being drained. Once this bridging sodium freezes, it can be difficult to pull components away from each other. This would be problematic especially for the injection nozzle component since it will be replaced between each test. Sodium systems are not typically opened while the sodium is molten.

The new CO_2 injection micro-nozzle (see Figure 6) consists of a 3.2 mm (1/8 inch) seamless 316 stainless steel tube with a machined stainless steel injector tip connected with a welded coupling. The end of each injector tip has a laser machined 63-75 µm diameter hole to form the actual nozzle which will simulate the PCHE microcrack. The tube is welded onto a 5.1 cm (2 inch) Grayloc® blind hub (attached to the bottom horizontal test vessel penetrations) as the nozzle sodium barrier. This new nozzle geometry makes EDM welding of the nozzle components possible, which is a far more robust method of joining them than the method previously considered: Nichrome brazing. Several of these nozzles have been fully fabricated. Approximately 15 additional nozzle tips have been laser drilled with diameters ranging from 60-75 µm. These tips will be welded to the nozzle assembly in FY 2013 for further sodium-CO_2 tests.

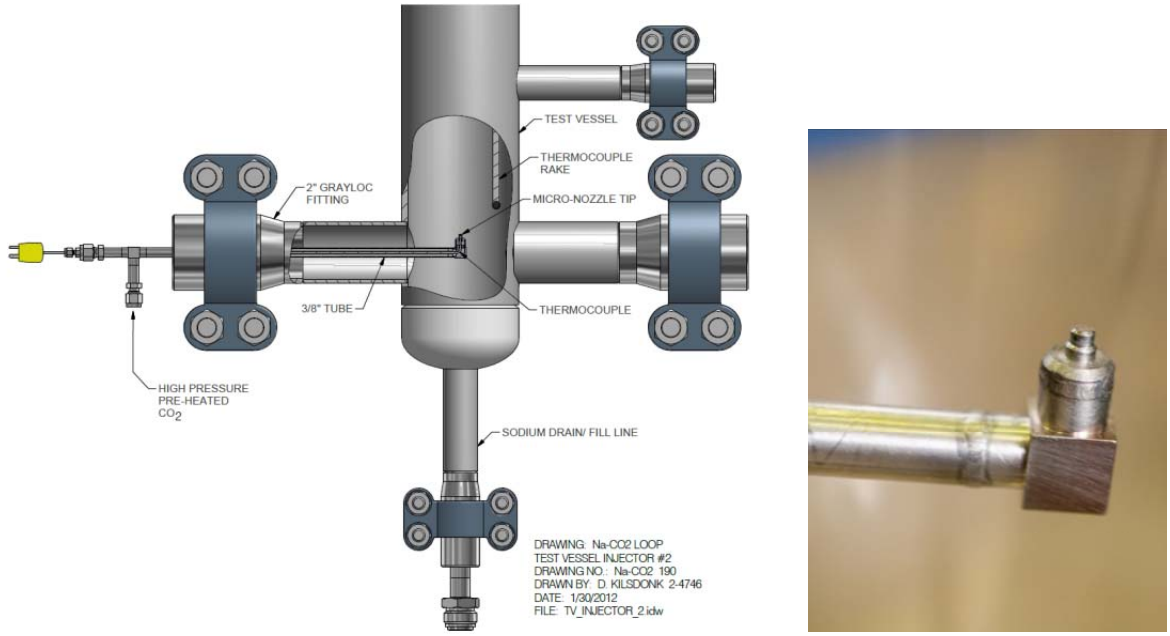

Figure 6: (left) Drawing of CO_2 micro-nozzle connected to high-pressure gas delivery line in a cutaway of the test vessel and (right) picture of one of the fabricated nozzles.

The CO_2 source consists of a traditional bottle manifold that feeds a booster pump. The pump pressurizes a reservoir cylinder that is used to supply a regulated pressure to the leak site of up to 20 MPa (2900 psig) pressure; the reservoir is used to dampen pressure fluctuations that are inherent when the pump is operational. Flow rate to the tube is measured with a Coriolis flowmeter. The occurrence of plugging will be evidenced by the flow rate tending towards zero. The output from the Coriolis flowmeter provides a feedback signal that automatically closes an isolation valve on the feed line to the leak site if the flow rate exceeds a user-defined threshold value. A flow-limiting orifice is positioned downstream of the flowmeter. This is a backup safety device that limits the peak CO_2 flow rate to the test section to an acceptable rate in the unlikely event that the tube feeding the leak and the isolation valve failed simultaneously. This orifice does not result in a significant pressure drop under normal operating conditions.

A photograph of the test vessel with a researcher below it for scale is included in Figure 7.

Figure 7: Test vessel with a researcher below for scale.

A cast aluminum circulation pre-heater (see Figure 8) is capable of heating the CO_2 up to 510 ºC prior to entering the test section. This system has a dedicated over-temperature

protection system. This circulation pre-heater is also a new component purchased in FY 2012. It should give the experimenter much greater control of the inlet CO_2 temperature.

Figure 8: CO_2 Pre-heater installed near test section

A stainless steel box to enclose the sodium dump tank was fabricated. This is a newly designed component to allow for ease-of-insulation of the irregularly-shaped dump tank. The dump tank was first wrapped with a layer of flexible alumina insulation. Then granular vermiculite insulation can be poured into the stainless steel box. This combination will provide ample insulation for the dump tank and make heating time shorter. The vermiculite can then be sucked from the box with a vacuum equipped with a HEPA filter to access the dump tank.

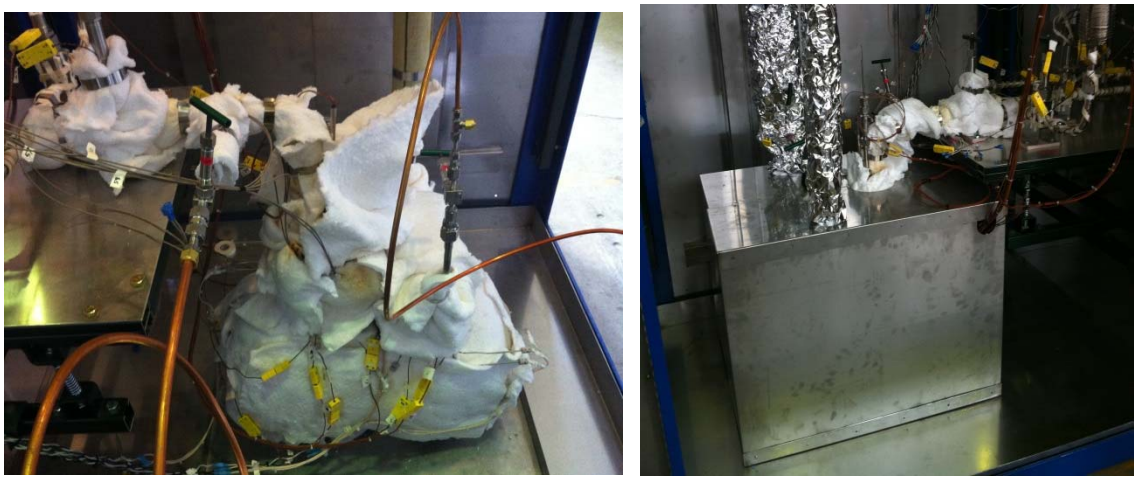

Figure 9: (left) Picture of dump tank wrapped in a layer of flexible alumina insulation and (right) picture of stainless box with dump tank inside.

3 FY 2012 Status

Assembly of the SNAKE experiment was completed in July 2012. Significant efforts went into this assembly which are detailed in this report. An anticipated updated timeline (Gantt chart) for the project is included in Table 2. The facility design was completed in September, 2010 which included a detailed design report (Farmer et al., 2010). Most major components have been purchased, and portions of the facility have been assembled in 2011, which was documented in Gerardi et al. (2011). Completion of major component procurement is complete. Minor materials and services (M&S) purchases are ongoing. Additional improvements and instruments are expected to take place in FY 2013. Completion of the facility assembly and sodium loading was completed in July 2012. Facility shakedown and initial data is anticipated to be complete around September 2012, along with a summary report. Fiscal Year 2013 will consist of obtaining substantial data on the interactions between sodium and CO_2, with a detailed report delivered in September 2013. Model development and validation will take place the following Fiscal Year, with a detailed model report anticipated to be delivered in 2014.

Table 2: Anticipated timeline for Na-CO_2 experiment program. Completed portions of tasks are colored in black, while uncompleted tasks are gray. Deliverable reports timeframes are marked with a yellow dot.

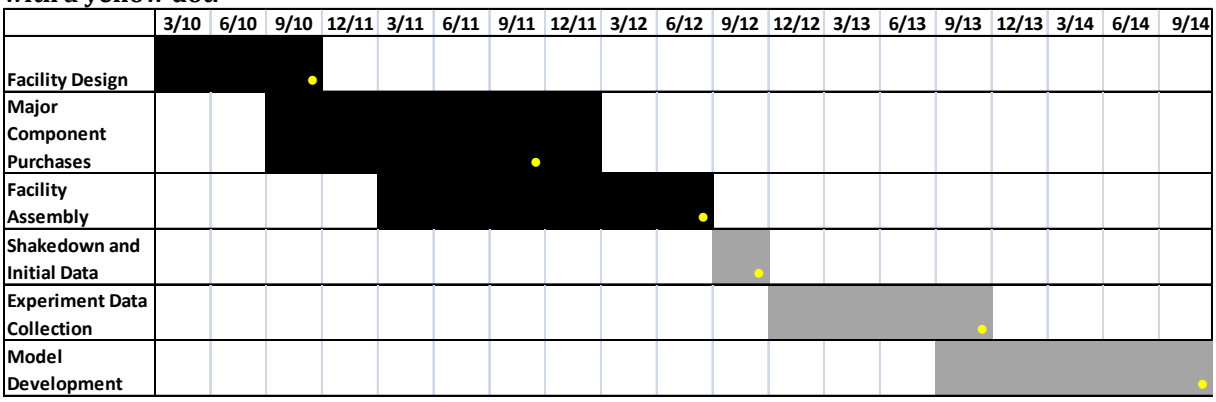

Sodium Loading Completed

Approximately 44 lbs (20 kg; ~21 L/5.5 gal) of sodium were transferred into the SNAKE dump tank on July 19, 2012. This sodium came from a clean sodium storage drum that Argonne has had on site since 1989 (see photo in Figure 1). A 3/8" line extends from the sodium storage drum, which was hooked up to the 3/4" fill port on the dump tank. The sodium storage tank was heated to 110 ˚C, while the dump tank and transfer tubing were heated to 119 ˚C. While the melting and self-ignition temperatures of sodium are 97.72 ˚C, and 120 ˚C, respectively, the transfer temperatures listed above have been tuned by Argonne researchers over a number of decades with great success. It is particularly important to avoid the chance of plugging in the transfer tubing since removing a plug could be difficult depending on the presence of contaminants.

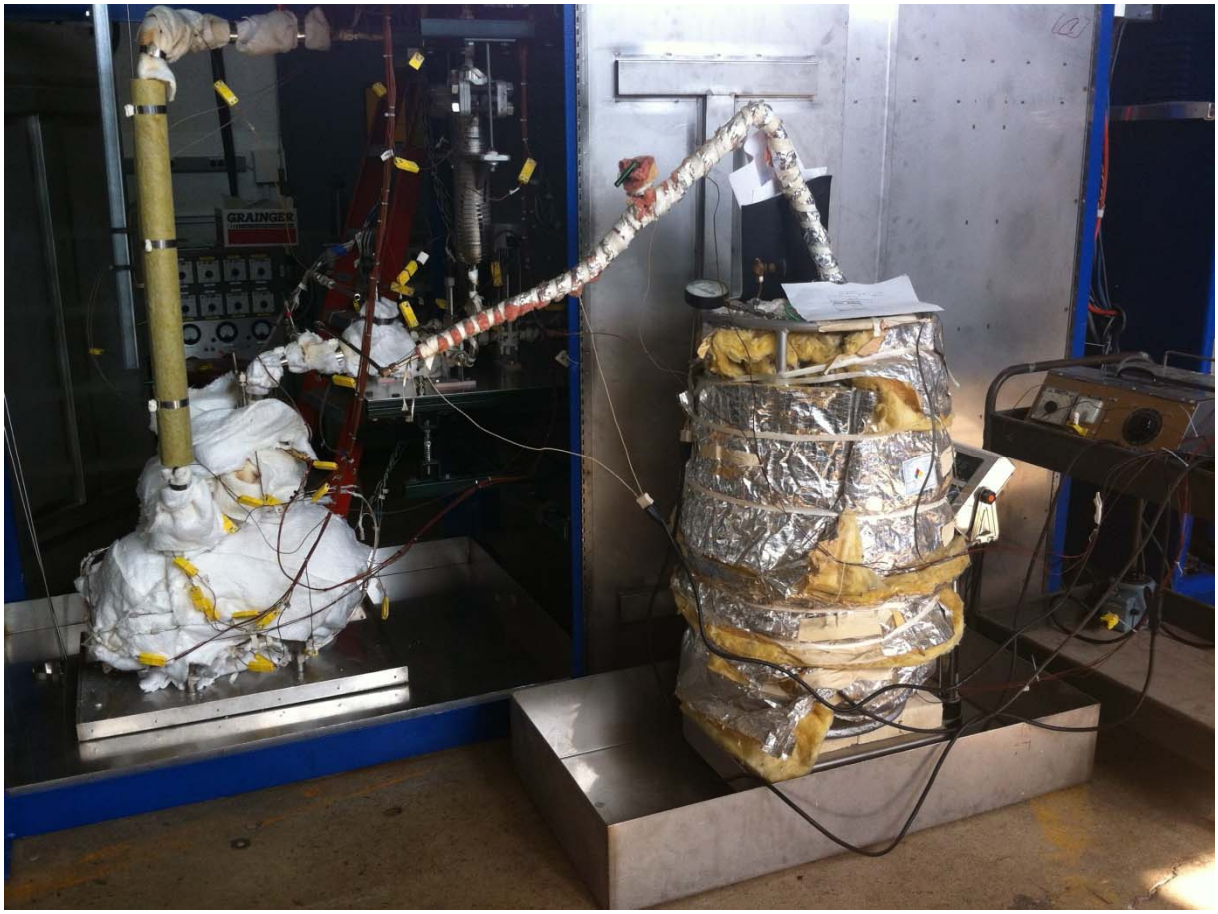

Figure 10: Photograph of sodium storage drum (right) hooked up to SNAKE sodium dump tank (left) in order to transfer sodium. The drum insulation has been in place for several decades, and a positive Argon pressure has been maintained above the solid sodium in the drum in order to limit oxidation.

Prior to the transfer of sodium, several precautions were taken in order to reduce and mitigate sodium fires. First, the sodium scrubber system was fully prepared for service. This involved some maintenance which included cleaning of the venturi nozzles, flushing of the magnehilic differential pressure gauges, and checkout of the whole system. A drum of dry silica sand and a MET-L-X fire extinguisher were placed near the SNAKE facility for emergency fire suppression preparedness. During the transfer, the operators donned flame retardant clothing (long-sleeved shirt & pants, fire-suit), safety shoes, chemical goggles, leather spats, gauntlet-style chrome leather welding gloves, and hard hats with face shields. The Argonne Fire Department was alerted of the procedure.

Once these preparations were made, a rough vacuum of under 0.75 mbar (75 Pa; 0.6 mm Hg) was drawn on the sodium dump tank, pulled through a sodium separator packed with stainless steel wool to prevent sodium vapor from entering the vacuum or clogging the line. A vacuum was used to “pull” the sodium into the dump tank because it avoids having an open vent which would expose the sodium to oxygen. A slight overpressure (3 psi) of dried Ultra High Purity (UHP) argon (<2ppm water, <2ppm oxygen) was maintained on the sodium

storage drum in order to avoid contamination. The sodium drum was placed on a digital scale in order to monitor the drum weight change and estimate the mass of sodium transferred. Three conductivity probes were inserted from the top of the dump tank at several heights (1", 4" & 5.8" from tank bottom) to monitor the sodium level. The dump tank was isolated from the vacuum to reduce the opportunity for sodium vapor leakage and then all valves between the sodium transfer drum and dump tank were opened. The weight scale and conductivity level probes were used to monitor the transfer, and the valves between the two tanks were closed once the target level was reached. All systems were allowed to completely cool to room temperature. The dump tank was then back-filled with UHP argon to ~10 psi. The transfer tubing was carefully removed and all open tubes were capped. The capped transfer tubing and sodium storage drum were then placed in a sodium storage room.

Safety Case Made

Significant resources were devoted toward making the safety case for the SNAKE facility by both the SNAKE experiment staff and the ANL Nuclear Engineering Experiment Safety Review Committee (ESRC). The initial safety writeup document was prepared during January 2012, and formally submitted to the review committee on February 9, 2012. After a lengthy review process requiring a number of revisions to the document and procedures, the full experiment safety program for SNAKE was approved on June 25, 2012. This process included formal safety reviews by two pressure safety Subject Matter Experts (SME) and one Asphyxiant Gas/Toxic Gas SME. Several of the new safety analyses and procedures are included in Section 4 of this report. Standard Operating Procedures (SOPs) were developed as part of this process. These include pre-experiment sodium-transfer and vessel heat up, experiment, normal shutdown, emergency shutdown, and pressure testing procedures.

Miscellaneous activities

Additional activities carried out in FY 2012 that were not listed above but are worthy of mention are outlined below. This list provides a nearly complete picture of the facility construction status as of the writing of this report.

- Connection of the experiment enclosure to the Building 206 Alkali Metal Passivation Booth (Scrubber) was completed. This work consisted of installing a booster fan on the outside of the enclosure and a duct system extending from the enclosure, through a wall, to the scrubber. This work was done under the supervision of Argonne Health Physics since the scrubber and associated pipes are radioactively contaminated. This activity included removal and replacement of contaminated duct work near the scrubber.
- All vessels and components were installed in the enclosure.

- The mass spectrometer was calibrated in-house using calibration gases of specific mixtures of argon and carbon dioxide. The mass spectrometer was mounted on the outside of the SNAKE facility (see Figure 11).

Figure 11: Mass spectrometer mounted on outside of SNAKE facility. The duct that runs to the scrubber is pictured at the top, while two wire terminal boxes that contain the heater controller wires are located above the mass spectrometer.

- The building power (120V) was upgraded around the experiment facility. This included additional circuits and outlets along the high-bay walls, and on both the exterior and interior of the SNAKE enclosure. Permanent lighting was also included inside the enclosure.

- Power wiring to the sodium-component heaters (heater cables and heater tape) was installed, as well as heater control wiring and thermocouples to the temperature controllers. Low temperature (~200 ˚C) testing of all components was completed. See Figure 12 for a photograph of the heater tape wrapped around the tubing and valves that run between the test section and dump tank.

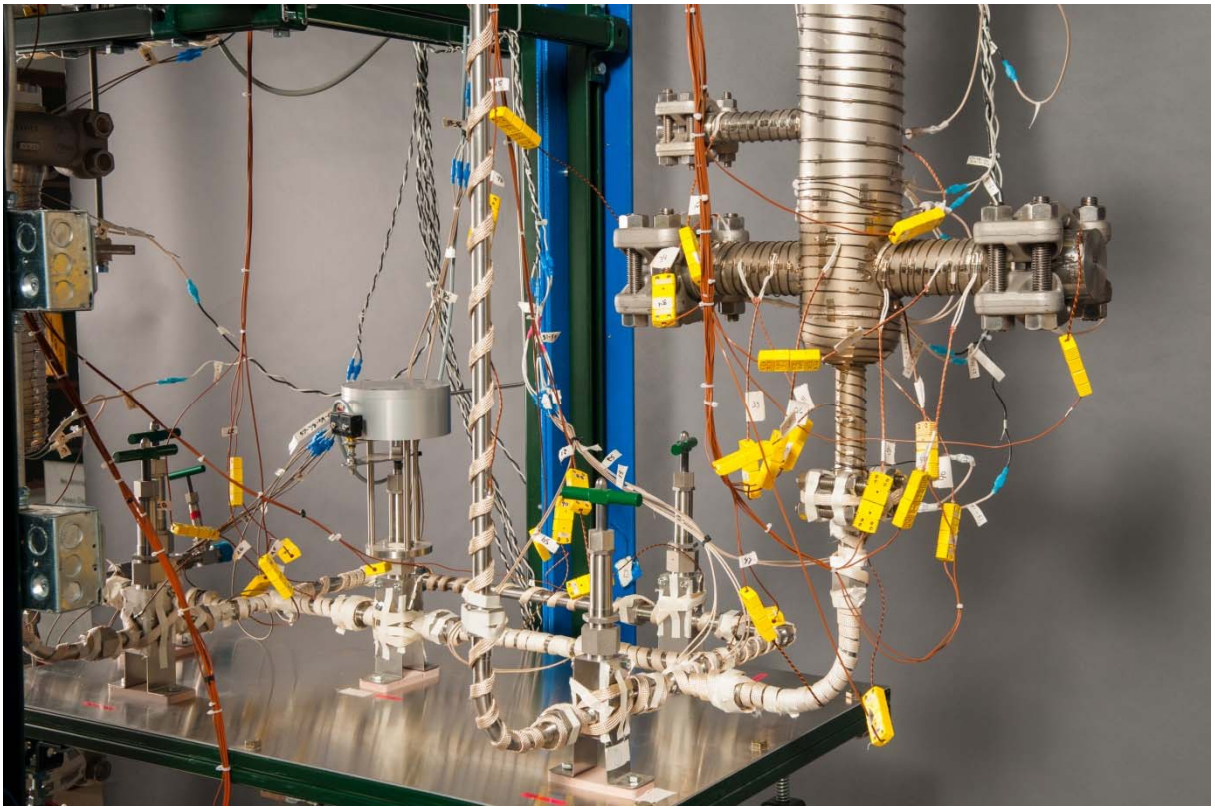

Figure 12: Heater tape wrapped around the tubing and valves that run between the test section (top right) and dump tank (not pictured – bottom left). The emergency dump valve is located in the center of the photograph.

- Installation of the Grayloc® flanges to the large-diameter fittings was completed, which included torqueing to the manufacturer suggested values.
- The cover gas control system was assembled and connected to the sodium system.
- Building air was connected to the sodium pneumatic valves (emergency and drain) through a solenoid control system.
- Installation of the cold trap and separator were completed. This involved the addition of single-strand stainless steel wool to both.
- The exhaust line of the facility was run outside of the high bay in order to ensure asphyxiant and toxic gases generated by the experiment.
- A custom instrument power supply and control panel rack mount was installed and has been tested (see Figure 13 for photograph).

- Design and wiring of the automatic safety system has begun. It is anticipated that completion of this system will occur between September-October 2012.
- A rack-mount control panel for the pneumatic valves has been assembled (see Figure 13 for photograph) and tested. This system allows for manual or automatic (Labview) valve control.

Figure 13: Control rack with National Instruments chassis on top, valve control panel in the middle, and instrument power near the bottom.

- All pressure relief devices have been installed. Several of these devices are adjustable relief valves that were calibrated in-house.

The assembled state of the facility as of the writing of this report is shown in Figure 14.

Figure 14: Assembled state of the SNAKE facility as of July 2012 (4 front doors are removed to view interior).

4 Safety & Miscellaneous Analyses

This section documents some of the new hazard analysis and calculations that have been carried out in support of the safety case for the experiment.

The potential hazards associated with this facility include sodium, high-temperature, toxic gas, electrical, and pressure. These hazards are addressed in detail below. Routine use of hand tool, ladder, electrical equipment, and crane work will also be employed. All personnel are required to wear safety shoes and safety glasses while working in the lab.

Sodium

The facility was fabricated using best practices for sodium systems that include use of pedigree flanges where connections are made (i.e. VCR and Grayloc® types), full penetration welds, and conformance to ASME certifications for the piping (Section B31.3 of the ASME Piping Code) and pressure vessels (Section VIII Division 1 of the ASME Boiler and Pressure Vessel Code). These steps will minimize the risk of leakage during operations; however, leakage cannot be ruled out. A number of engineered and administrative controls are put in place to minimize the potential impact of a sodium leak and possible fire which are detailed below.

Additional training is provided for personnel performing hands-on-work. This includes the following required actions that are consistent with the requirements for alkali metal passivation operations in the Bldg. 308 scrubber:

1. NE Chemical Hygiene Plan (CHP) training
2. The NE divisional course on alkali-metal safety
3. Review Chapter 4-7 “Alkali Metal Safety” of the ANL-E ESH Manual

Class D (MET-L-X) fire extinguishers will be maintained around the facility as well as a drum of dry silica sand for covering minor sodium leaks. At no time are personnel obligated to fight a fire. Small fires can usually be extinguished by covering with the MET-L-X. Fires should never be fought alone. If a small fire will be fought, personnel must don a faceshield positioned next to the extinguishers prior to opening the SNAKE enclosure. Spills, accidents, explosions, fires, and similar incidents that have or may result in injury or significant property damage shall be reported immediately using Argonne’s 911 system. An eyewash station is located next to the Sodium Scrubber which is directly behind the wall from SNAKE separating the high-bay and annex. A eyewash station and safety shower are also located in the hallway near D-117. Showers are also located in the building bathrooms. However, personnel are advised to remove clothing and wipe off sodium residue if at all possible before resorting to washing with water which will readily react with sodium.

An enclosure system has been constructed around all sodium-carrying components to contain dripping sodium and smoke resulting from an accidental sodium leak. Two stainless steel catch trays line the entire floor of the enclosure. These trays have 4 inch high walls and welded seams, which can each hold the entire volume of sodium in the system, but are primarily expected to contain any small leak that could develop. Ducting (15 cm/6” diameter)

and a duct fan (650 cfm) are attached to the upper north wall of the enclosure to direct smoke from any accidental sodium spill to the Building 206 Scrubber unit. The Scrubber (or the Alkali Metal Passivation Booth) is specifically designed and IL EPA permitted for safe alkali metal (sodium) waste treatment and to collect and dispose of smoke from experiments that have an accidental fire or release of aerosols. The duct booster fan is 25.4 cm (10 inch) in diameter with an 18,000 slpm (650 cfm) flow rating and is attached to the scrubber duct on the outside of the enclosure. The enclosure is stainless-steel-paneled and supported by steel angle iron (see Figure 15 for assembled enclosure photograph).

Figure 15: Photograph of SNAKE experiment with all stainless steel enclosure doors in place.

A smoke alarm inside the confinement will automatically activate the Scrubber should smoke be detected. The system can also be manually activated (by a switch located on the high bay wall just to the north of the apparatus) should the smoke alarm fail or if it is desired to have the booster fan and Scrubber operating for other reasons (e.g. system testing or during operations that have higher potential for sodium leakage such as sodium loading). The automatic start of the scrubber upon actuation of the smoke detector will be verified prior to sodium loading.

Verification that the Scrubber successfully starts manually will be tested once a month while the SNAKE experiment program is active. Should smoke be released from the enclosure and reach the high bay ceiling, the main highbay building fire alarms will automatically alert the ANL fire department. The fire department will be notified prior to

operations involving molten sodium so that they will have adequate knowledge to safely respond if a fire were to occur. Signs will be posted at all entrances stating that the high-bay contains more than 1 pound of alkali metal.

Signs will be posted over the scrubber fan and pump breakers, the appropriate pump valve, and the burn booth door. Each sign will clearly state that the breaker, valve, or door should not be touched without first contacting the lead SNAKE experimenter since they serve an emergency function. As long as these systems are left in their proper state, the scrubber will turn on via the manual "emergency button" or via the SNAKE smoke alarm system.

During loading operations the 206 highbay will be closed to personnel not involved in the procedure. The following PPE will be employed during loading: gloves (chrome leather welding gloves are the only acceptable material), safety glasses, and a long-sleeved flame retardant shirt or lab coat. Additional PPE are only required when disconnecting the Na transfer tube at the end of the sodium loading procedure, (safety shoes, chemical goggles, fire-resistant long-sleeve shirt and pants, leather spats, gauntlet-style chrome leather welding gloves, and hard hats with face shields). A sodium fire extinguisher (MET-L-X) and a drum of silica sand will be available nearby. During sodium loading and/or when part of the system needs to be opened, a glove bag with an argon purge or other means of total enclosure will be used to prevent sodium from direct contact with air. Personnel will be shown the nearest eyewash and safety shower locations prior to loading operations.

High temperature

The experiment is heated with electrical heater cable (nickel-chrome-iron wire packed in MgO insulation in an Inconel 600 sheath), heavy-duty fiberglass insulated heater tape suitable for direct contact with conductive surfaces, and a CO_2 inline pre-heater. The maximum operating temperature of all components in the loop will be 510 ˚C. During operation, some surfaces of the experiment will be hot enough to cause burn injuries if they are touched. A sign will be posted around the outside of the enclosure says "Danger. Hot." Only authorized personnel will be allowed to open the enclosure doors while the experiment is heated. A sign will be posted around the outside of the enclosure that says "Authorized personnel only."

The sodium-component heating system is broken down into a number of zones in order to allow for controlling the temperature of specific components separately. Each zone has its own temperature controller and its own fuse (up to 15 A). These temperature controllers are integrated into three separate rack systems which each have an electromechanical contactor that opens the heating circuit to turn off all heaters. These contactors can be activated manually, or via the DAS computer which is fed a number of redundant thermocouples for each zone and will act as the over-temperature protection system.

The CO_2 pre-heater has its own separate temperature controller with integrated over-temperature protection. The over-protection system has its own independent thermocouple to signal heater shutdown should the CO_2 temperature exceed a preset limit.

Additionally, the ambient temperature in the enclosure is expected to become quite hot. Thermocouples will be placed at the top and bottom of the enclosure to monitor this and alert personnel of the temperature prior to entry. Should these readings get higher than desirable, additional insulation can be placed around components to reduce heat loss/enclosure heating.

If heaters are exposed for repair by removing insulation, rope off area with warning tape to preclude inadvertent entry.

Pressure

The sodium components of the experiment will be maintained at approximately one atmosphere at all times except during the process of moving sodium from different portions of the experiment and during loading and unloading. These processes will require pressures under 1 bar gauge and could involve evacuating portions of the system.

The gas system will deliver pressurized gases (argon or CO_2) to the experiment. The argon lines will only need to be pressurized to several bar to provide inert gas cover, move sodium among components, and maintain inert gas bubbling through the nozzle prior to experiment initiation. The CO_2 line will pressurized up to 20 MPa (2900 psig) during an experiment run. While this nozzle will release high pressure gas into the sodium system, no significant pressurization of the sodium will occur due to the small volume of gas being emitted and the fact that the exhaust system will remain open during the experiment.

A stored energy calculation was completed which examines the stored energy in the high pressure CO_2 line and the pressurization of the entire sodium system up to the burst pressure of the sodium rupture disks (1.68 MPa, 243 psi). The total stored energy of the system was calculated to be above 75,000 ft-lbf in certain cases, which puts this system into the high-hazard category.

A pressure gauge is permanently installed on a top penetration of the test vessel to monitor and record the vessel pressure and alert the operator of an off-normal pressurization event.

To meet the requirements for the pressure system safety, the following approach has been taken:

- All experiment components including fittings, valves, and welds meet or exceed the specifications of the ASME code for process piping Section B31.3, the ASME Boiler and Pressure Vessel Code Section VIII Division 1 or the equivalent. The pressure and temperature ratings for the loop components are listed in Appendix I. Also listed are the burst pressures and maximum regulator delivery pressures for each subsystem of the experiment.
- Weld inspections and hydrostatic testing of components manufactured in the ANL Central shops have been documented.
- All regulators are new CGA-rated devices supplied by Airgas that have built in safety relief valves.

- A file of drawings, certifications, and inspections is maintained. The file includes specifications of commercial items used in the loop.

Several safety relief devices are installed on the experiment. Specifically, safety relief burst disks are placed after the separator in the sodium system, just before the nozzle in the CO_2 line, just after the reservoir in the CO_2 line, and in the air booster line. These relief devices are the rupture disk-type (non-reclosing) type. The rupture values for each rupture disk are listed in Table 3. All pressure relief devices have sufficient capacity. Stock items are ASME stamped. Custom items are not stamped due to the excessive price and lead-time required for this process. However, for each rupture disk design the manufacturer will carry out and document destructive lab tests on 2 duplicate rupture disks at room temperature and 2 duplicate rupture disks at the maximum operating temperature. The results of all 4 tests must be within the design tolerances at the specified temperature to be acceptable. Certification of conformance and material certification will be provided for all parts including burst test results. The rupture disk supplier must be evaluated by the Laboratory Quality Assurance group.

Table 3: Rupture disk parameters

Location	Burst Pressure @ 22 ˚C, MPa (psi)	High temperature limit (˚C)	Burst Pressure at high temperature limit, MPa (psi)	Line size, mm (in)
After the separator (sodium system)	--	538	1.7 (243)	(12.7) ½
After the reservoir (CO_2 line)	22.7 (3300)	538	--	(12.7) ½
After the CO_2 pre-heater (CO_2/argon line)	--	538	22.7 (3300)	(12.7) ½
Air line	0.9 (130)	n/a	n/a	(12.7) ½

All of the gas manifolds and single gas bottles have two-stage stainless steel regulators controlling their delivery pressures. These are CGA certified and provided by Airgas. All cylinders are DOT-stamped and provided by Airgas with built in safety relief devices. All pressure regulators should be checked and tested every 5 years. The maximum pressures delivered by these regulators are listed in Table 4.

Table 4: Regulator delivery pressures

Line	Maximum delivery pressure, MPa (psi)	Max regulator pressure rating, MPa (psi)
CO_2 supply	3.44 (500)	24.5 (3500)
Argon cover gas	1.72 (250)	24.5 (3500)
Argon nozzle supply	1.72 (250)	24.5 (3500)
Air booster supply (bottle)	1.72 (250)	24.5 (3500)
Air booster supply filter/regulator (at booster)	1.72 (250)	1.72 (250)
Pneumatic valves air supply (building air)	0.62 (90)	n/a

The safety relief device on the sodium system is intentionally not placed immediately near the test section or dump tank to prevent air ingress into the system. Because air-ingress to the sodium vessels must be absolutely avoided, a non-closing rupture disk cannot be used. Reclosing safety valves rely on elastic seals that cannot withstand the temperature or sodium service, so cannot be used. The installed non-closing rupture disk was not placed directly on the test section because its efficacy cannot be confirmed upon being subject to sodium vapor, thus it is placed after the separator where the gases should be cleaned. The primary pressure source will be the high-pressure CO_2 line after the booster which has two rupture-disk type pressure relief valves installed. Additionally, should higher than designed flow rates of CO_2 flow through the Coriolis flowmeter the CO_2/argon safety valve will automatically close, or should that fail – the safety orifice device should limit CO_2 flow into the test section until the operator can manually discontinue CO_2 injection. Several calculations in Appendix III show that as long as the initial sodium height is below 0.8m, the orifice will satisfactorily prevent sodium from swelling to the level of the 1" exhaust line[1]. The exhaust line is intended to remain open during an experiment which should further reduce the potential for over-pressurization. Several adjustable relief valves have been placed on the system. They are listed along with their set relief pressures in Table 5.

A detailed pressure test procedure has been developed and shall be completed and documented prior to experiment operation. The maximum temperature and pressure rating of the experiment components are listed in Table 6.

[1] Sodium could potentially fill and freeze in the 1" line which would then seal the test vessel and allow the pressure source to pressurize the vessel beyond the design rating. Thus, it is important to maintain the initial sodium inventory below the point at which the excess gas due to a nozzle failure could push the sodium pool into the 1" line.

Table 5: Adjustable relief valve pressures

Location	Burst Pressure @ 22 ˚C, kPa (psi)	Line size, mm (in)
Argon cover gas line near bottle	238 (30)	(6.4) ¼
Argon nozzle supply line near bottle	1720 (250)	(6.4) ¼
CO_2 gas line near bottle	3400 (500)	(6.4) ¼
Air line for booster pump near bottle	698 (100)	(6.4) ¼
Building air line	698 (100)	(6.4) ¼
Dump tank relief after mini-separator	303 (43)	(6.4) ¼

Table 6: Component pressure and temperature ratings

SNAKE PRESSURE AND TEMPERATURE RATINGS						
					07/26/12	
Part #	Component	Manufacturer	Notes	Maximum Service Temperature (C)	Maximum service pressure at Max Temp (MPa)	Maximum service pressure at Max Temp (psia)
	Gas system (general)			**538**	**20.0**	**20**
	1/4" tubing, 0.049" wall	Swagelok	Stainless 316	538	39.3	5699
	1/4" Swagelok tube fittings	Swagelok	Comparable to 1/4" tubing, 0.049" wall	538	39.3	5699
	Argon & CO2 Manifolds	Airgas		-	24.1	3500
	CO2 line pre-booster		**Minimum rated component in this subsystem**	**93**	**3.4**	**500**
B-23	Pressure relief (adjustable)	Swagelok	**Relief pressure of relief device for this system**		**3.4**	**500**
C-7	Low temperature, high pressure manual plug valves, 1/4"	Swagelok	SS-4P4T	93	20.6	3000
C-9	CO2/Argon Gas Filter 1/4 line 1/2 micron	Swagelok	SS-4TF-05	482	22.5	3280
C-6	Low temperature, low pressure pneumatic valves, 1/4	Swagelok	SS-4BK-10	93	3.4	500
C-4	Gas Booster Pump	Maximator	DLE 30	100	60.0	8700
	CO2 line post-booster, pre-heater		**Minimum rated component in this subsystem**	**37.0**	**24.1**	**3500**
B-17	Pressure relief	Fike	**Burst pressure of relief device for this system**	**538.0**	**22.8**	**3300**
C-4	Gas Booster Pump	Maximator	DLE 30	100	60.0	8700
C-10	Reservoir	Swagelok		93	27.3	3960
C-5	Pressure transmitter	Rosemount		80	69.0	10000
C-8	Low temperature, high pressure manual metering valves, 1/4"	Swagelok	SS-31RS4	93	29.6	4295
C-16	Low temperature, high pressure pneumatic valves, 1/4"	Swagelok	SS-HBS4-C	37	24.1	3500
C-1	Coriolis Flowmeter	Brooks	QMBM 3	65	31.0	4500
C-20	High temperature check valve	Swagelok	SS-53S4	398	24.3	3520
C-11	Safety orifice	O'Keefe	BLP-4-SS	37	27.6	4000
	CO2 line post-heater		**Minimum rated component in this subsystem**	**538**	**27.6**	**4000**
B-17	Pressure relief	Fike	**Burst pressure of relief device for this system**	**538**	**22.8**	**3300**
C-21	Gas pre-heater	Cast Aluminum	Cast-X	538	27.6	4000
	TC fitting	Swagelok	Tube fitting comparable to 1/4" tube	538	39.3	5699
	Argon nozzle supply gas system		**Minimum rated component in this subsystem**	**37.0**	**6.9**	**1000**
B-23	Pressure relief (adjustable)	Swagelok	**Relief pressure of relief device for this system**		**1.2**	**170**
C-7	Low temperature, high pressure manual plug valves, 1/4"	Swagelok	SS-4P4T	93	20.6	3000
C-3	Gas mass flow meter, 0-10 slpm Argon	Teledyne	HFM-D-300	50	6.9	1000
C-8	Low temperature, high pressure manual metering valves, 1/4"	Swagelok	SS-31RS4	93	29.6	4295
C-16	Low temperature, high pressure pneumatic valves, 1/4"	Swagelok	SS-HBS4-C	37	24.1	3500
C-20	High temperature check valve	Swagelok	SS-53S4	398	24.3	3520
	Argon cover gas system		**Minimum rated component in this subsystem**	**50.0**	**3.4**	**500**
B-23	Pressure relief (adjustable)	Swagelok	**Relief pressure of relief device for this system**		**0.6**	**85**
C-7	Low temperature, high pressure manual plug valves, 1/4"	Swagelok	SS-4P4T	93	20.6	3000
C-6	Low temperature, low pressure pneumatic valves, 1/4 (NO)	Swagelok	SS-4BK-10	93	3.4	500
C-8	Low temperature, high pressure manual metering valves, 1/4"	Swagelok	SS-31RS4	93	29.6	4295
C-2	Gas mass flow controller, 0-25 slpm Argon	Teledyne	HFC-D-302	50	6.9	1000
	Sodium system (high temperature sections)		**Minimum rated component in this subsystem**	**510.0**	**3.1**	**450**
B-14	Pressure relief	Fike	**Burst pressure of relief device for this system**	**538.0**	**1.7**	**243**
	1/2" tubing, 0.049" wall	Swagelok	Stainless 316	538	19.4	2813
	3/4" tubing, 0.049" wall	Swagelok	Stainless 316	538	12.5	1813
	1" pipe, SCH 40		Stainless 316	538	21.2	3074
	3/4" VCR Fittings	Swagelok	Stainless 316	538	14.6	2117
	1/2" VCR Fittings	Swagelok	Stainless 316	538	18.4	2668
B-1	Grayloc 1" fittings	Grayloc	Stainless hubs & Clamps	538	23.2	3359
B-2	Grayloc 2" fittings	Grayloc	Stainless hubs & Clamps	538	24.6	3571
B-3	Grayloc 3" fittings	Grayloc	Stainless hubs & Clamps	538	18.5	2683
B-4	Grayloc 4" fittings	Grayloc	Stainless hubs & Clamps	538	13.1	1900
B-1	Grayloc 1" ASTM 638-GR660 seal rings	Grayloc	660 seal rings	538	-	-
B-2	Grayloc 2" ASTM 638-GR660 seal rings	Grayloc	660 seal rings	538	-	-
B-4	Grayloc 4" ASTM 638-GR660 seal rings	Grayloc	660 seal rings	538	-	-
B-5	Dump tank	Ability		510	3.1	450
B-6	Test Vessel	Ability		510	3.1	450
B-7	Separator/vapor trap	Ability		510	3.1	450
B-12	Filter vessel	Central Shops		538	3.4	500
B-13	Cold trap vessel	Central Shops		538	3.4	500
B-18	Sapphire view port	MPF Products, Inc.		450 (maintained at lower temperature)	3.1	450
C-5	Pressure transmitter	Rosemount		80 (long standoff to cool gas)	69.0	10000
B-10	Manual valve (1/2" line)	Swagelok		538	3.3	480
B-8	Pneumatic valve (1/2" line)	Swagelok		538	3.3	480
B-9	Manual valves (3/4" line)	Swagelok		538	3.3	480
B-11	Pneumatic valve (3/4" line)	Swagelok		538	3.3	480
	Sodium system (low temperature sections)		**Minimum rated component in this subsystem**	**400.0**	**3.1**	**450**
B-14	Pressure relief	Fike	**Burst pressure of relief device for this system**	**538.0**	**1.7**	**243**
B-1	Grayloc 1" AISI 630 seal rings	Grayloc	630 seal rings	400 (used in low temperature locations)	-	-
B-2	Grayloc 2" AISI 630 seal rings	Grayloc	630 seal rings	400 (used in low temperature locations)	-	-
B-3	Grayloc 3" AISI 630 seal rings	Grayloc	630 seal rings	400 (used in low temperature locations)	-	-
B-4	Grayloc 4" AISI 630 seal rings	Grayloc	630 seal rings	400 (used in low temperature locations)	-	-
	Exhaust system		**Minimum rated component in this subsystem**	**40.0**	**20.6**	**3000**
B-14	Pressure relief	Fike	**Burst pressure of relief device for this system**	**538.0**	**1.7**	**243**
C-8	Low temperature, high pressure manual metering valves, 1/4"	Swagelok	SS-31RS4	93	29.6	4295
C-17	Low temperature, high pressure manual plug valve, 1/2"	Swagelok	SS-8P6T	93	20.6	3000
D-1	Mass spectrometer	SRS	UGA100	40	-	-
B-15	Swagelok filter	Swagelok	SS-4FW-VCR-2	482	22.5	3280
C-12	Exhaust Thermocouple	Omega	KMQSS-125G-6	1250	-	-

Electrical

The experiment is heated with electrical heater cable (nickel-chrome-iron wire packed in MgO insulation in an Inconel 600 sheath), heavy-duty fiberglass insulated heater tape suitable for direct contact with conductive surfaces, and a CO_2 inline pre-heater. All of these are powered by 120 VAC modulated by temperature controllers. The racks that supply the 120 VAC to the heaters are supplied by 480 VAC which are stepped down by transformers. Solenoid valves that operate the gas and sodium pneumatic valves are powered by 120 VAC circuits. The data acquisition system, computer, monitors, temperature controllers, duct booster fan, mass spectrometer, smoke detector, and AC/DC converters are fed by 120 VAC using standard three-pronged grounded cables. Several instruments (including flow meters, level meter, and pressure transmitter) are fed by DC power up to 24 V.

The data acquisition system and AC/DC converters are completely contained within the DAS rack. Those systems, the computer, monitors, solenoid valves, temperature controllers, duct booster fan, mass spectrometer, smoke detector, etc. are either UL listed devices or have been inspected and certified by NE qualified electrical inspectors.

The trace heating hookup and checkout was installed by NE personnel who were skilled, trained, authorized, and significantly experienced in this type of work. After installation was completed, NE electrical inspectors (Designated Electrical Equipment Inspectors, DEEI) have examined the installation to ensure that it is safe to use.

Only electrical work on unenergized equipment will be allowed. The standard lock-out/tag-out procedure will be implemented. All racks and equipment are connected to their main source of power via plugs which can be unplugged to verify their lack of circuit voltage.

Toxic gas

The chemical reaction that occurs during an experiment between sodium and CO_2 could result in the production of carbon monoxide. Bounding calculations show that the maximum production of CO that could occur would be approximately 5 slpm. During normal operations, this gas will travel through the sodium pool to the top of the test vessel and then flow with the argon cover gas out through the separator and exhaust system. This exhaust system is sampled by a mass spectrometer and then flows up through a copper pipe out a high-bay window to vent to the environment. The outlet of this exhaust points down and is covered by a mesh to prevent insect ingress. During normal operations there should be no personnel exposure to toxic gases since the experiment and exhaust system is completely sealed.

It is possible, but unlikely, that a seal or pipe failure could occur during an experiment that would release gases including carbon monoxide. If this occurs, the carbon monoxide emitted will be detected by two dedicated carbon monoxide alarms (one inside enclosure, one outside near PC workstation) that will signal an alarm if high levels of CO are detected. There will be no automatic response.

Calibration of the mass spectrometer will be completed using carbon monoxide from a lecture bottle sized gas cylinder. This involves hooking the lecture bottle (the CO is in an argon matrix) up to a line that passes by the mass spectrometer port. This line then will continue on to the exhaust system where it will pass through copper tubing and exit the high bay to the outside. This is via the normal exhaust system of the experiment. Since no carbon monoxide will be released inside during normal operations and a small bottle size of carbon monoxide will be used, no additional precautions need to be taken.

Estimate time to drain test vessel

The time it takes to drain sodium from the test vessel is important to understanding how the system will behave should an emergency situation arise. Drainage of the majority of the sodium into the dump tank is key since sodium can safely freeze there, while freezing in smaller diameter lines could cause structural problems.

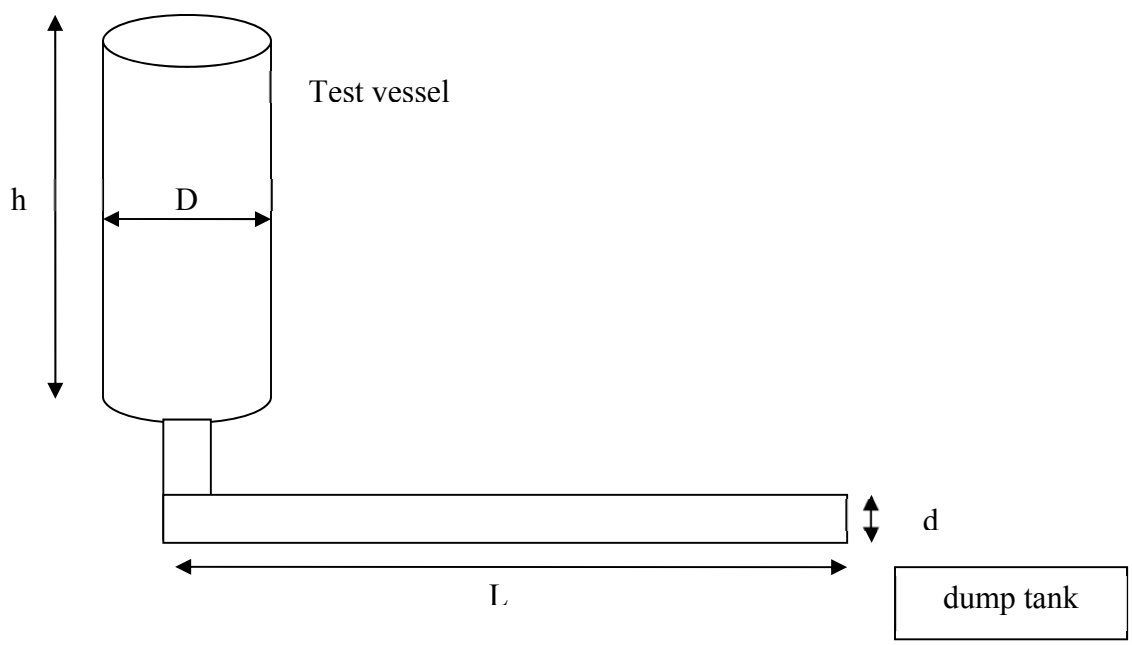

Figure 16: Sketch of test vessel draining problem

The 4" test vessel is assumed to be filled with sodium (H=1.2 m) and then drains through approximately L=7 feet of ¾" piping. Several minor losses such as tee's, entrance, exits, and a valve are also taken into consideration, although their impact is negligible.

The problem can be simply solved using the Bernoulli equation including the additional head losses mentioned above.

$$\left(p_{vessel} - p_{dump}\right) + \rho g h + \frac{\dot{m}}{2\rho}\left(\frac{1}{A_v^2} - \frac{1}{A_t^2}\right) + \Delta p_{loss} = 0$$

where the vessel pressure, p_{vessel} and p_{dump} are nominal both equal to atmospheric pressure. A_v and A_t are the cross-sectional area of the vessel and ¾" piping, respectively. The head loss from the various minor losses is given by:

$$\Delta p_{loss} = \Delta p_{form,i} + \Delta p_{form,e} + \Delta p_{fric} + \Delta p_{tee} + \Delta p_{valve}$$

All of the minor form losses are of the form:

$$\Delta p_{loss} = \mathrm{K}\frac{\rho \mathrm{v}_2^2}{2}$$

Where form loss coefficients are given in Table 7.

Table 7: Form loss coefficients

Form loss coefficient	Value
Inlet form loss, $K_{form,i}$	0.2
Exit form loss, $K_{form,e}$	1
Tee form loss, K_{tee}	0.5*2
Valve form loss, K_{valve}	8.5

And the friction loss in the 7' of ¾" piping is given as:

$$\Delta p_{fric} = f\frac{L}{d}\frac{\rho v_2^2}{2}$$

Where the Darcy friction factor, f is given for turbulent flow (which this flow is):

$$f = 0.184Re^{-0.2}$$

It is then possible to solve for the drain time in an iterative process by first solving for the mass flow rate:

$$\dot{m} = \frac{\sqrt{\rho g h - \Delta p_{loss}}}{\sqrt{\frac{1}{2\rho}\left(\frac{1}{A_t^2} - \frac{1}{A_p^2}\right)}}$$

Since the average mass flow rate can be determined as:

$$\dot{m} = A_t h \rho / t$$

The drain time is then simply

$$t = A_t h \rho / \dot{m}$$

An initial guess for the drain time is made, and then the above calculation is completed iteratively until the drain time converges.

Sodium property routines are used based on the Fink & Leibowitz report (1995). For example, at 150 ˚C, ρ=914 kg/m^3 and μ=0.54 cP.

The estimated drain times for several sodium temperature values are given in Table 8. All drain times are estimated to be below 10 seconds.

Table 8: Drain time estimates

Sodium temperature (˚C)	Drain time (s)
150	9.97
300	9.96
500	9.95

5 Summary

One appealing feature of the supercritical carbon dioxide Brayton cycle energy conversion system is the small footprint that the hardware requires, which is in part due to the use of Printed Circuit Heat Exchangers (PCHEs) as the heat source heat exchanger (Na-to-CO_2) as well as the recuperator and cooler modules. Although PCHEs have a high degree of structural integrity, the potential for leak(s) to develop between the sodium and CO_2 coolant channels in the secondary heat exchanger cannot be ruled out, and this would lead to discharge of high pressure CO_2 into the secondary coolant circuit. Due to the robustness of the PCHE design, catastrophic failure leading to gas jet blowdown into the secondary sodium loop is not deemed likely. Rather, small crack(s) (or micro-leaks) may develop in which CO_2 will bleed into the secondary system at a relatively low rate and chemically react with the sodium.

Therefore, an experiment program at Argonne was initiated in FY 2010 to investigate the reaction characteristics between sodium and CO_2 under micro-leak conditions. This report described the facility scaling rationale and design. Assembly of the SNAKE (S-CO_2, Na Kinetics Experiment) began in FY 2011 and was completed in July 2012. Approximately 44 lbs (20 kg; ~21 L/5.5 gal) of sodium has been transferred into the SNAKE dump tank from a drum of clean sodium. Work still continues on preparing the rest of the system for sodium readiness.

The facility itself has been designed to be flexible to accommodate other types of testing in the future. Many of the facility components are modular and include a number of extra fittings for diversity. Additional potential testing missions could include geometry specific testing of the sodium-CO_2 reaction, sodium-water reaction testing, fission product scrubbing tests, and high flowrate (jetting) CO_2 blowdown tests into sodium.

The goal of the sodium-CO_2 interaction tests is a fundamental understanding of sodium-CO_2 interactions under prototypical conditions of compact diffusion-bonded heat exchanger failure, a fundamental understanding of self-plugging if it occurs, and the development of one-dimensional phenomenological models for the interactions between high-pressure CO_2 issuing into liquid sodium from a micro leak across a stainless steel pressure boundary. These models will be validated using the experiment data obtained.

Initial facility shakedown and the first experiment are anticipated to take place in the September 2012 timeframe, along with a summary report. Fiscal Year 2013 will consist of

obtaining the complete experiment data matrix and making additional hardware improvements to improve data quality, with a detailed report delivered in September 2013. Model development and validation will take place the following Fiscal Year, with a detailed model report anticipated to be delivered in September 2014.

References

1. Advanced Reactor Concepts (ARC) Fact Sheet, U.S. Department of Energy's Office of Nuclear Energy, http://www.nuclear.energy.gov/pdfFiles/factSheets/2012_AdvReactor_Factsheet_Final.pdf, Accessed September, (2011).
2. ASHRAE: Systems Handbook, (1980).
3. J.E. Brockman, F.E. Arellano, and D.A. Lucero, "Validation of Models of Gas holdup in the CORCON Code," NUREG/CR-5433, SAND89-1951, Sandia National Laboratories, December, (1989).
4. Y. Chang, P. Finck, C. Grandy, Argonne National Laboratory, unpublished information, (2006).
5. M. Denman, J. LaChance, T. Sofu, G. Flanagan, R. Wigeland, and R. Bari, Sandia National Laboratories, unpublished information (2012).
6. J.H. Eoh, H.C. No, Y.H. Yoo, J.Y. Jeong, J.M Kim, S.O. Kim, "Wastage and Self-Plugging by a Potential CO_2 Ingress in a Supercritical CO_2 Power Conversion System of an SFR," J. Nuclear Science and Technology, Vol. 47(11), pp. 1023-1036, (2010).
7. M.T. Farmer, D.J. Kilsdonk, J.J. Sienicki, and C. Grandy, "Design of a Test Facility to Investigate Fundamental Na-CO_2 Interactions in Compact Heat Exchangers," ANL-GENIV-164 (2010).
8. J. Fink, L. Leibowitz, "Thermodynamic and Transport Properties of Sodium Liquid and Vapor," Argonne National Laboratory, ANL/RE-95/2 (1995).
9. C. Gerardi, C. Grandy, and C. Youngdahl, Argonne National Laboratory, unpublished information, (2010).
10. C. Gerardi, M.T. Farmer, D.J. Kilsdonk, J.J. Sienicki, and C. Grandy, "Fundamental Na-CO_2 Interactions in Compact Heat Exchangers Experiment (SNAKE): FY 2011 Status Update," ANL-ARC-199, (2011).
11. L. Gicquel, C. Latgé, and N. Simon, "Supercritical CO_2 Brayton Cycle Coupled with a Sodium Fast Reactor: Na/CO_2 Interaction Experiments and Modeling," Paper 10215, 2010 International Congress on Advances in Nuclear Power Plants (ICAPP '10), San Diego, CA, USA, June 13-17, (2010).
12. L. Gicquel, C. Latgé, and N. Simon, Ph. Hobbes, A. Soboni, J.C. Buvat, J.L. Gustin, "Brayton Cycle with S-CO_2: Investigations of Sodium-Carbon Dioxide Interactions," Slides from Meeting with A. Moisseytsev (ANL), April 27-29, (2011).
13. I. Kataoka and M. Ishii, "Mechanistic Modeling and Correlations for Pool Entrainment Phenomenon," Int. J. Heat Mass Transfer, Vol. 27, pp. 199-2014, (1984).
14. X. Li, R. Le Pierres, and S. J. Dewson, "Heat Exchangers for the Next Generation of Nuclear Reactors," Paper 6105, 2006 International Congress on Advances in Nuclear Power Plants (ICAPP '06), Reno, NV, USA, June 4-8, (2006).

15. M. Lindeburg, *Mechanical Engineering Reference Manual,* 11th Ed. Professional Publications, Inc., Belmont, California, (2001).

16. F.J. Moody, Introduction to Unsteady Thermofluid Mechanics, J. Wiley & Sons, New York, NY, (1990).

17. B. Munson, D. Young and T. Okiishi, *Fundamentals of Fluid Mechanics*, John Wiley & Sons, New York, 3rd Ed, (1998).

18. R. Newman and J. Payne, "The Burning Rates of Sodium Pool Fires," Combustion and Flame, Vol. 33, pp. 291-297, (1978).

19. Z. Renjun, J. Xinzhen, L. Baozhang, Z. Yong, and Z. Laiqi, "Studies on Gas Holdup in a Bubble Column Operated at Elevated Temperatures," Ind. Eng. Chem. Res, Vol. 27, pp. 1910-1916, (1988).

20. R. Span, and W. Wagner, "A New Equation of State for Carbon Dioxide Covering the Fluid Region from the Triple-Point Temperature to 1100K at Pressure up to 800 MPa", J. Phys. Chem Ref. Data, Vol. 25(6), pp. 1509-1596, (1996).

21. N.E. Todreas, and M.S. Kazimi, Nuclear Systems I: Thermal Hydraulic Fundamentals, Taylor & Francis, (1990).

22. G.B. Wallis, One-Dimensional Two-Phase Flow, McGraw-Hill, New York, NY, (1969).

23. N. Zuber and J. A. Findlay, "Average Volumetric Concentration in Two-Phase Flow Systems," J. Heat Transfer, Vol. 87, pp. 453–468, (1965).

Nuclear Engineering Division
Argonne National Laboratory
9700 South Case Avenue
Argonne, IL 60439

www.anl.gov

Argonne National Laboratory is a U.S. Department of Energy
laboratory managed by UChicago Argonne, LLC