CRADA Final Report ANL/NE/C0001301-01

"Metal Interconnect Materials for Solid Oxide Fuel Cells"

This CRADA involved Argonne National Laboratory as the Contractor and overall Project Manager. The CRADA Industrial Participant was Materials and Systems Research, Incorporated, located in Salt Lake City, Utah. The Project Subcontractor who did the majority of the work is listed below:

The Russian Federal Nuclear Center All-Russia Research Institute of Experimental Physics (RFNC) VNIIEF.

To improve logistics in contracting in the Russian Federation, an international not-for-profit organization, the International Science and Technology Center (ISTC) put in place the subcontract. The project number was 2281p; Argonne National Laboratory served as the technical manager of this contract under the NIS-IPP program.

The attached ISTC 2281p report serves as the CRADA Final Report.

Technical Report

(June 01, 2003 – August 31, 2003)

ISTC Project #2281p

Development of New Materials for Fuel Cells

Agreement between International Science and Technology Center (ISTC)
and
Russian Federal Nuclear Center –
All-Russia Research Institute of Experimental Physics
(RFNC-VNIIEF)

Project Manager: Alexander Mikhailovich Gorelov,
Representative of the Leading Institution RFNC-VNIIEF,
37 Mira Avenue, Sarov, Nizhny Novgorod Region, Russia
Telephone: 7+83130+ 42724
Fax: 7+83130+ 45798
E-mail: gorelov@astra.vniief.ru

Sarov
2003

1. Brief Description of the Works Performed.

1.1.Description of the works on **Tasks 1.4., 1.5.**

Task 1.4. *Mounting and launching into operation of a galvanic line (4 baths) to provide coating of plates 0.4 x 712 x 1296 mm in size. Improvement of the welding technology for the plates 712 x 1296 mm in size using tapes 0.4 m wide of the samples of 20X23H18 stainless steel.*

Task 1.5. *Adjustment of a galvanic method and of a method of explosion cladding when nickel coating is applied onto stainless steel plates 0.4 x 712 x 1296 mm in size. The plates are nickel coated on one side. Possible implementation of barrier layers of different metals on 20X23H18 steel to prevent the diffusion of the steel components into the nickel coating are studied. The quality of the obtained coatings is checked by different means of optical and electronic microscopy, and also by means of spectral radiography.*

Deliverables: a certificate of receipt in exploitation of a line from 4 plating baths - 6 quarter. Coated samples - 6 quarter.

The works at a site of galvanic nickel plating are being completed. The line of plating baths was prepared for tentative coating to get assertion of acceptance commission. During opening-up, the equipment was subjected to padding tests.

Goals of the tests:

1. Before filling the baths with an electrolyte it is necessary to be sure in reliable protection of an electrolyte from a contact with the bodies of sinks made of ferrous metal. If a leakage appears in protective jackets during the operation, that will result into damage of a large volume of the electrolyte. The large costs of decontamination of the spoilt electrolyte and cooking of a new electrolyte are obvious.
2. Check of reliability of hermetic sealing of an internal surface of the sheet coated on one side.
3. Functional check and control of the reliability of current leads intended to work with a current up to 500A.

Unfortunately it was not possible to eliminate leakage in the simplified designs of isolating jackets (in the form of polyethylene bags). It was decided to implement the solution on replacement of polyethylene jackets with welded jackets of plasticate 4 mm thick. The conducted tests established absolute reliability of plasticate jackets.

During the tests there was revealed the necessity of elongation of the isolating rubber jacket at a cathode unit.

Tests of current leads were conducted using a bath of cathode etching at current load of 500A. The results of tests are positive.

So, a line of baths is prepared to start tentative coatings. There were purchased all chemical reactants, acids, and special capacitance (of about 1000 liters) for distilled water.

The improvement of a **technology to weld the plates from tapes 400mm in width** is being completed. The improvement of the technology of engine driven argon-arc welding (AAW) of tapes of 20X23H18 steel (0,4*50*1000 mm) was done using an appliance on a steel cooling foot block with a reshaping groove. Experimentally it was found out that a steel cooling foot block opposite to the copper one makes it possible to produce welds of a better quality with minimum buckling of tapes (due to the decrease of per unit length energy of welding, i.e. decrease of heat input in the welded joint). The tapes

were assembled in pairs and fixed to the foot blocks by engine driven AAW (tack welding) at high speeds of welding (about 10 mm /s) by segments of 10-15 mm with a step of tacking of 50-60 mm. Tacking was done from the middle to the edges along all the length of the joint of tapes 1000 mm long (to reduce deformation of tapes). The high speed of welding has allowed us to receive surface joining with a shallow depth of foundering and to snap welded edges from displacement and pressing against each other. Welding of joints of the tapes to reduce stresses and deformations were done with implementation of such techniques as: “ back - stepwise ” method and a technique “from the middle to the edges”.

As a result of the conducted research it is found out that minimum deformations of the samples are provided tack welding of separate segments of the joint 1000 mm long using the technique “from middle to edges”. Deformation of the samples is “soft” and up to 5mm; it is easily eliminated by gentle pressing that provides flatness of the samples according to the design documentation. Stable formation of weld joints with foundering through all the thickness (0,4 mm) of the metal is observed in the samples with the width of a juncture of 1.2 – 1.9 mm. A height of reinforcement of the weld in separate places is up to 0.1 mm. Small rise can be removed by mechanical dressing flush with base metal.
To weld full-size plates meant to make A0711 – P871.01.050 bipolar plates there was worked out A0712/3 – P313design documentation, and assembling and welding accessories were made with a steel cooling foot block and steel clamp bars for the length of the joint of 1600mm. A0712/3 – P307 attachment was worked out and made to perform leakage test of the weld of full-size sheets.

During improvement of **nickel coating technology** on sheets of stainless steel 0,4 x 712x 1296 mm in size using **a galvanic method** the following research was conducted on the site of galvanic nickel plating:

1. Improvement of the process of reactivation of the anode-etching electrolyte.
2. Improvement of operation of slime removal from the steel surface.

At long exploitation of the anode-etching electrolyte (20 % of sulfuric acid) it gets contaminated with sulfates of iron and chromium, which are accumulated in the solution and change elemental composition of the electrolyte. Solution of a sulfuric acid turns yellow and requires periodic clearing. When a large amount of sulphates salts are present in the solution, they cake at the bottom of baths. They drain clean solution, and the sink is cleaned from the deposit. However, this method is inconvenient when we work with baths of large volumes. There was done some research on electrolytic removal of metallic impurities. It was found out that the periodic work through of the electrolyte at a current density of 0.1-0.5 A/dm^2 provides clearing of solution from ions of iron and chromium.

After the anode etching the steel surface keeps some traces of slime, which consists of iron oxides Fe_3O_4 and iron carbides Fe_3C indissoluble in a sulfuric acid and poorly removed during washdown in water. The slime traditionally is removed by mechanical wiping with a cotton pad; then the surface is pickled at the cathode in 20% solution of sulfuric acid within 1 minute. The research on electrolytic deleting of slime at the cathode in 20 % solution of a sulfuric acid was conducted. The outcomes of experiments are shown in Table 1.1.

Table 1.1

Mode of Slime Removal

Cathode density of current, A/dm^2	**Time, min**	**Condition of the Surface**
3	1	Presence of slime
	10	Presence of slime
	15	Presence of slime
6	1	Presence of slime
	3	Presence of slime

	5	No slime
10	0,5	Presence of slime
	1	No slime

As an outcome of the research the modes of slum removal using an electrolytic method were identified:

- Current density is 6 A/dm^2, time of etching is 5 min,

or

- Current density is 10 A/dm^2 , time of etching is 1 min.

The solutions for chemical desmutting are tested. The characteristics of solutions, the structure and treatment schedules are shown in Table 1.2.

Table 1.2

Characteristic of dips

№	Structure of solutions	Concentration, g/l	Mode of treatment	
			Temperature,^{o}C	Time, min
1	Sulfuric acid Chromium anhydride Sodium salt	25 100 4	Room	5
2	**Caustic soda**	80	70	3
3	Nitrogen acid Sulfuric acid	80 100	Room	5 sec.

Implementation of **barrier-free layers** on 20X23H18 steel to prevent diffusion of elements of steel into the nickel coating was studied in experiments with two types of coating – a TiN protective coating and a copper galvanic one.

Implementation of a TiN protective coating is well known. Tests under MCFC operation conditions during 1000 hours also gave a good result.

Titanium nitride was sprayed on using a vacuum method – a method of **condensation with ionic bombardment** (CIB). Metallurgical analyses have shown that microstructure of TiN-coated steel is practically identical after corrosion tests during 250, 500, 750 and 1000 hours. Thickness of the coating on samples was from 6 up to 8 microns. Not coated areas, separations, cracks and other defects of the coatings were not revealed. There was observed minor closed porosity characteristic for such kind of coatings.

Fig.1.1 shows microscopical maps of structures of the titanium nitride coatings on steel samples after corrosion test during 250 and 1000 hours, respectively.

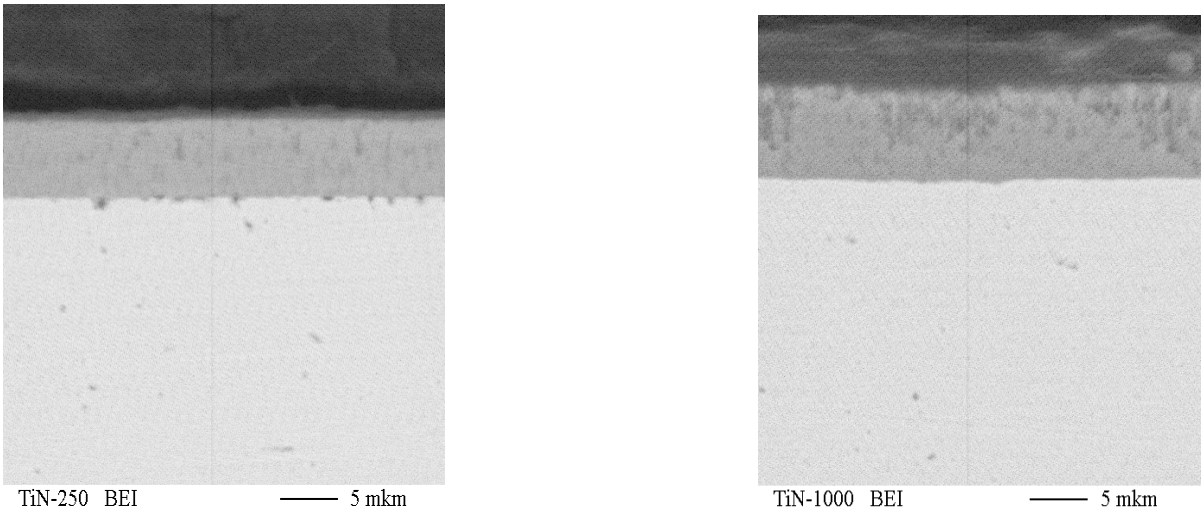

Fig.1.1. Electron microscopical maps of structures of the titanium nitride coatings on steel samples after corrosion test during 250 and 1000 hours.

Titanium nitride coatings protect well under operation conditions of an MCFC.

The attempts to coat titanium nitride with galvanic nickel, as it is required by the task of the Project, failed. However, a protective coating of titanium nitride has the right to exist by itself. Earlier in Russia there were known only facilities of “Bulat” type to coat not large areas, but now industrial facilities make it possible to coat large surfaces keeping a low cost of the coating.

Special interest was drawn to the results of the tests of nickel coating with the copper sub-layer on 20X23H18 steel. Results of metallographic analyses of these samples are given below. Samples of 20X23H18 steel coated on two sides (the coating consisted of several layers – a thin layer of galvanic nickel applied immediately onto the steel, followed by a layer of copper and the main layer of galvanic nickel) were studied before and after corrosion tests in the melt of carbonates at 650^0 C during 1500 hours. Microstructure of the coated steel was studied in cross sections of the samples on microslices made by a generally accepted technique using "NEOPHOT - 32" light microscope.

Microstructure of the sample before corrosion tests is shown in Fig.1.2.

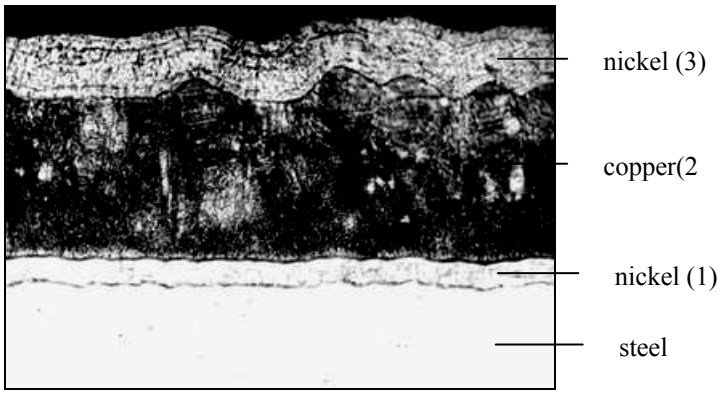

Fig. 1.2. Microstructure of the coating on the steel before corrosion tests, x320

According to Fig.1.2, the coating consists of several layers: a layer of nickel (1) ~ 9 – 13 microns thick, which is applied immediately onto the steel; there is a layer of copper above it (2) ~ 70 – 80 microns thick and a layer of nickel (3) ~ from 40 up to 60 microns thick. All the layers in this coating have a column structure characteristic for galvanic coatings. Layer of nickel (3) reveals some stripes besides the column structure.

Microstructure of the sample after corrosion tests is shown in Fig. 1.3.

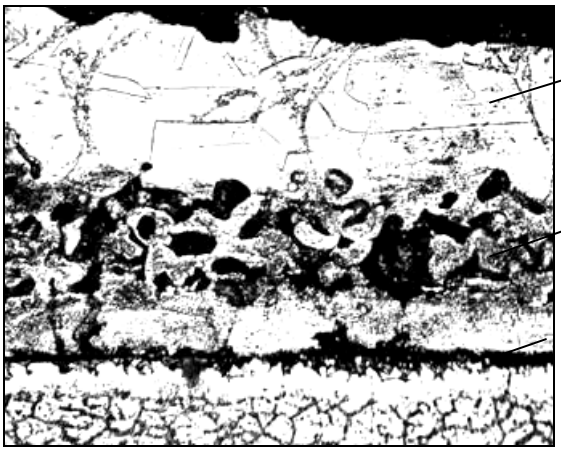

Fig. 1.3. Microstructure of the coating after corrosion tests, x320

Microstructure of the coating after corrosion tests underwent considerable changes. Grain structure is observed in the nickel layer, the same as in the layer of copper. There are friable areas in the layer of copper. Two diffusion zones are observed between a layer of copper and a layer of steel. The diffusion zone of light color adjacent to the steel has thickness of ~ 10 microns, and above it there is a zone of dark color ~ 8 microns thick. The light and dark diffusion zones were apparently formed as a result of interdiffusion of members of steel, of the nickel layer (1) and copper layer (2), and as a result of infiltration of a carbonate electrolyte from an opened circumferential shear deep into of the sample. Results of chemical analysis testify to this, too. Traces of K and O are detected in the diffusion zones. Opened circumferential shear of the sample is the only path of infiltration of the electrolyte, as the basic coating is pore-free and represents a Ni-Cu solution.

Traces of corrosion after corrosion tests during 1500 hours were not revealed in the outside nickel layer and in the steel under the coating.

So, Ni-Cu coating can be found a promising one, as operations of nickel plating and copperplating can be easily parts of a unified manufacturing process.

The experiments to improve the **technology of explosion cladding (EC)** of plates with the area of cladding of ~ 400cm^2 were going on. The plates with such area of cladding (~ 400cm^2) were obtained earlier, but the nickel coating of those plates had significant amount of defects. When matching the outcomes of experiments on EC of plates with different areas it was found out that the plates with a smaller area have defects of smaller sizes in comparison with the plates of greater area. This happens despite the fact that the experiments are conducted following the same schemes and keeping the same parameters of the process of explosion cladding. So, we may expect that when the area of cladding (and the area of plates) is further increased, the sizes of the defects in the coatings and their quantity will

grow. Defects in the form of a through destruction of the coating are not acceptable for bipolar plates. That is why proceeding with the works on increase of the area of cladding seems illogical until elimination of the reasons of defect formation.

It was supposed to eliminate defects of the coatings by a more thorough assembling of the unit and a more successful selection of the material for the "soft" plate. This supposition was made on the basis of the following possible reasons of damage of the cladding layer:

- Presence of the air between the "soft" plate and the foil,
- Non-uniformity of rubber – the material used for "soft" plate (porosity, density etc.).

In order to eliminate the mentioned reasons special attention in experiments on explosion cladding (plates with the area of cladding $S_{cl} \approx 400cm^2$) was paid to the quality of gluing of the "soft" plate and the foil to prevent presence of the air between them. Besides, there were made experiments with implementation of the "soft" plate made of different materials, for example, several layers of cardboard pasted together. However, when following **the flat scheme of cladding** with the foil 100 microns thick we did not manage to remove the defects completely on the plates of $400cm^2$. But the quality of adhesion between the cladding layer and the substrate in the sections without the defects was satisfactory (see Fig.1.4). Fewer defects are produced when following the **cylindrical scheme of cladding.** Defects are local and they are at the place of the joint of the nickel shell.

The complexity of the task lies in the fact that the real reasons to cause defects in the coatings have not been stated in a unique way. A more deep analysis of the explosion cladding process is required as the known solutions have not allowed to achieve the necessary outcome.

At present we are preparing for the experiments with the 100-micron foil implementing some solutions to produce coatings without the defects in the form of through destruction of the coating.

After explosion cladding with a cladding layer of a nickel foil 0.3-mm thick much less amount of defects are produced. So, additional experiments with 0.3-mm nickel foil are planned when the area of cladding will be 400 – 900 cm^2; both flat and cylindrical schemes will be used.

Difficulties in production of defect-free coatings come from not high level of scrutiny of the processes of cladding when thickness of the cladding layer is small, and that was already mentioned at a formulation of the tasks. Rather complex engineering tasks are solved successfully in the Institute with implementation of the EC technique when thicknesses of the cladding layer are large. There were produced cylindrical parts, plates and tables with different combinations of metals: aluminum - copper, steel - titanium, brass - titanium etc., and the area of cladding was up to $5m^2$ at thickness of a cladding layer from 2 up to 50mm.

Fig 1.4

1.2. Description of the works of Quarter 5 on **Tasks 2.3, 2.4, 2.5, 2.6**.

Task 2.3. *Study of the conduction, phase composition and surface structure of the oxide films*
Duration – 12 months.
Deliverables: Records of research on oxide films.

Studies of conduction of the contacts fabricated from metal materials with porous electrodes under FC conditions have been completed. The test results are being analyzed. The industrially fabricated thin sheet specimens of the group of alloys (see Table 1.3) have been examined.

Table 1.3

Laboratory melts composition (mass, %)

Composition	Carbon	Silicon	Manganese	Chromium	Nickel	Titanium	Aluminum	Other elements
30Cr-45Ni-1Al –(Ti, Y)	0,033	0,5	0,5	28,8	46,0	0,01	0,8	Ce-0,028 La-0,011
30Cr-45Ni-1Al	0,034	0,65	0,4	29,7	45,2	0,29	0,72	Ce-0,018 La-0,005
30Cr-45Ni-1Al –(Ti)	0,04	0,48	0,38	30,2	46,1	0,01	0,92	Y-0,025
30Cr-45Ni-1Al –(Ti, Y)	0,039	0,48	0,37	30,0	45,8	0,35	0,78	Y-0,027

Task 2.4. *Test smelting in industrial furnaces. Fabrication of forgings for rolled products*

Duration – 9 months.
Deliverables: Pilot batch of sheets.

After smelting in Public Corporation «Metallurgical Works «Elektrostal»» and forging into sheet-bars, the properties of the industrially smelted alloy Х30Н45ІОТ (composition: C-0,014; Si-0,74; Mn-0,59; S - 0,007; P-0,013; Cr-29,5; Ni-44,5; Al-0,68; Ti-0,25; Y -0,035; Fe- the rest) were examined to determine the technological modes for the industrial production of experimental batch of sheet metal in Public Corporation "Ashinsky Metallurgical Works".

The results of studying the sheet-bars from the alloy Х30Н45ІОТ are represented in Tables 1.4 – 1.8.

Table 1.4

Contamination of the alloy by metal-free impurities (all-Russian State Standard 1778-ІІІ4)

№№ of the sheet-bar	SO	PO	BS	PS	NDS	S	SN	PN
1	0,5	0,5	0,5	0,5	0,5	0,5	3	3
2	0,5	0,5	0,5	0,5	0,5	0,5	1	2,5
3	0,5	0,5	0,5	0,5	0,5	0,5	2	3
4	0,5	0,5	0,5	0,5	0,5	0,5	2	2,5
5	0,5	0,5	0,5	0,5	0,5	0,5	3	2
6	0,5	0,5	0,5	0,5	0,5	0,5	2	2,5

SO – stitch oxides;
PO – point oxides;
BS – brittle silicates;
PS – plastic silicates;
NDS – non-deformable silicates;
S - sulphides;
SN – stitch nitrides;
PN – point nitrides.

Table 1.5

Contamination of the alloy by metal-free impurities (ASTM B45 method A)

№№ of the sheet-bar	**A**		**B**		**C**		**D**	
1	M	Б	M	Б	M	Б	M	Б
2	0	0	0	0	0	0	0	0
3	0	0	0	0	0	0	0	0
4	0	0	0	0	0	0	0	0
5	0	0	0	0	0	0	0	0
6	0	0	0	0	0	0	0	0

Table 1.6

Mechanical characteristics of the alloy (state of delivery)

Test temperature, ^{0}C	**$\sigma_{вн}$ N/mm^2**	**$\sigma_{0,2}$, N/mm^2**	**δ, %**	**ψ, %**
20	720	450	36,0	74,9
600	460	290	20,0	26,6
700	340	270	24,8	31,1
800	245	210	40,0	32,4
900	145	135	52,8	75,0

Table 1.7

Mechanical characteristics of the alloy after thermal treatment under conditions: 1050 ^{0}C, cooling in the air medium

Test temperature, ^{0}C	**$\sigma_{вн}$ N/mm^2**	**$\sigma_{0,2}$, N/mm^2**	**δ, %**	**ψ, %**
20	685	330	43,2	78,8
600	475	165	40,0	50,7
700	360	160	28,0	45,3
800	285	180	43,2	51,0

Table 1.8

Impact elasticity of the alloy

Thermal treatment conditions	Test temperature., ^{0}C	KCU, J/cm^2
State of delivery (without thermal treatment)	20	185,0
	600	140,0
	700	166,3
	800	168,8
Thermal treatment under conditions: 1050 ^{0}C, cooling in the air medium	20	275,0
	600	217,5
	700	193,8
	800	225,0

Task 2.5. *Delivery to the Partner of 10 sheets of the best alloy with the size of 0,8 x 712 x 1296 mm.*

Deliverables: shipment (export) of 10 sheets of the best alloy to ANL.

Based on the research results, in Public Corporation "Ashinsky Metallurgical Works" a technology was elaborated and the conditions were determined (number of recastings, including thermal treatment). A pilot batch consisting of several sheets with the size of 0,8x820x1420 mm from the alloy X30H45IOT was fabricated (composition: C-0,014; Si-0,74; Mn-0,59; S - 0,007; P-0,013; Cr-29,5; Ni-44,5; Al-0,68; Ti-0,25; Y -0,035; Fe – the rest).

The required standard-technical documentation was worked out. Preproduction is being effected for the fabrication of a pilot batch, a part of which (10 pcs.) will be delivered to the USA (FCE).

The package of documents is being prepared for the delivery of the plates to FCE (according to the Tasks 1,2).

Task 2.6. *Carrying out technical-economical analysis to evaluate the cost of a bipolar plate with the size of 712 x 1296 mm and thickness of 0,55 mm fabricated from the new alloy by a coil rolling method with the annual size of an order in the amount of 400000 plates.*

Deliverables: Report

Data analysis of the production technology of an industrial pilot batch of sheets was carried out with an eye to develop the cost estimation technique for the fabrication of a bipolar plate with the size of 712 x 1296 mm and thickness of 0,55 mm with the annual size of an order in the amount of 400000 plates from the alloy X30H45IOT in Russia in a process of:

- fabrication of the forged sheet rods in Public Corporation «Metallurgical Works «Elektrostal»».
- fabrication of the batch of sheet rolled metal with the size of 0,8 x 712 x 1296 mm in Public Corporation «Ashinsky Metallurgical Works».

Public Corporation «Metallurgical Works «Elektrostal»» and Public Corporation «Ashinsky Metallurgical Works» are one of the largest producers of corrosion-resistant steels and alloys produced in the form of thin sheet rolled metal, including the steel of the 310S type.

1.3. Description of the works in the 5th quarter **Tasks 3.7, 3.8**

Task 3.7. *Test of the best material in an MCFC assembly.*

Deliverables: results of testing of the best material in an MCFC assembly

Task 3.8. *Manufacturing of the pilot batch of samples (2-3 samples 10 x 10 cm). Sending them to ANL.*

Deliverables: pilot batch of samples – 6th quarter; sending (export) of cermet samples to ANL

During the first year of the Project research on Task 3 was practically completed. The best compositions were identified. They are the following compositions: 60% $LiAlO_2$ + 40% Ni and 40% TiN + 60% Ni, reinforced with 045H nickel mesh. Ring parts were made of the specified compositions (see Fig.3.1) to imitate circumferential part, and disks were made (see Fig.3.2) to imitate the central part of a bipolar plate within a fuel cell. Thickness of the ring and of the disks was 2 mm.

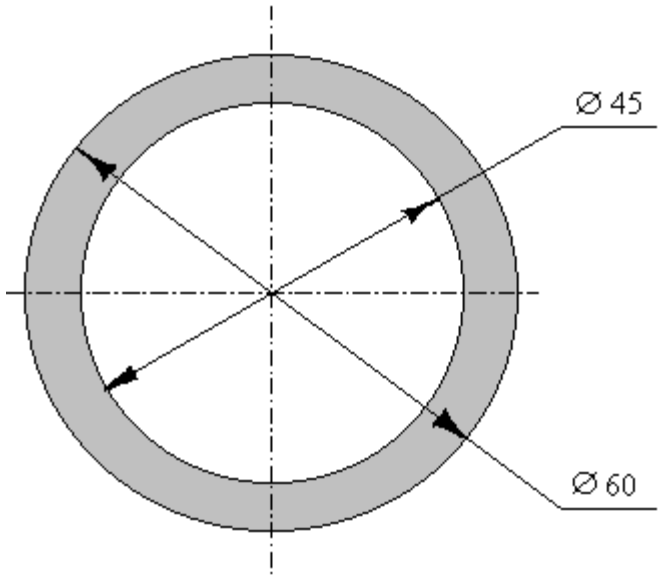

Fig. 3.1

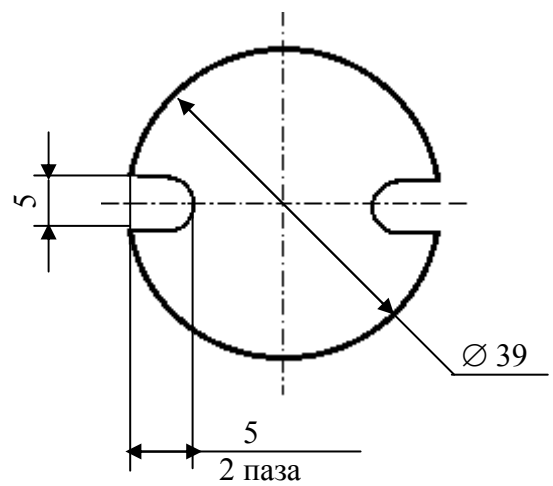

Fig. 3.2

Three plates of each of the materials 60% $LiAlO_2$ + 40% Ni and 40% TiN + 60% Ni reinforced with 045H nickel mesh 100x100 mm were made to be sent to the Customer. Maximum thickness of the plates was 2 mm. After the modes of treatment are adjusted using the defective samples it is planned to finish nominal plates up to the minimum possible thickness. A package of documents is being prepared to send the samples to ANL.

Within Task 3 a wide class of metal ceramic materials was studied. However, **intermetallide compounds** can be of particular interest as MCFC materials**.** Intermetallides have high electrical conductivity (in fact they are metals, see Table 3.1), besides many of them have a high mechanical strength, and they are refractory and temperature-resistant.

Table 3.1

№	Material	Sizesof the sample, mm	Specific resistance, Ohm mm^2/мм	Specific electric conductivity, Mmho/m
1	ПВ-Н70Ю30 (NiAl)	18,3 x 9 x 1,5	0,202	4,95
2	ПВ-Н70Ю30 (NiAl)	29 x 9 x 1,5	0,204	4,90
3	ПВ-Н85Ю15 (Ni_3Al)	45 x 9 x 1,5	0,55	1,81
4	ПВ-Н85Ю15 (Ni_3Al)	15,7 x 9 x 1,5	0,54	1,85

Such compounds are available in Ni – Al system, for example (NiAl and Ni_3Al). These compounds in powders are industrially produced in Russia. Preliminary tests under operating conditions of an MCFC anode have shown that NiAl-based material has resistance comparable with corrosion resistant steel (see Table 3.2).

Table 3.2

Gravimetric method. Temperature is 650°C, melt of Li_2/K_2CO_3 eutectics, $H_2+CO_2+H_2O$ environment, after 100 hours.

Material	Corrosion losses after 100 hour tests, Δm/S, g/cm^2
ПВ-Н70Ю30 (NiAl)	-0,0002
ПВ-Н85Ю15 (Ni_3Al)	Destruction in 25 hours
Steel 20Х23Н18Т*	0,0014

*Values are given for comparison

Results of intermetallide tests (NiAl and Ni_3Al) have shown that they are very different despite similarity of physical-mechanical properties. If a ПВ-Н70Ю30-based material (NiAl) has shown excellent stability, ПВ-Н85Ю15 (Ni_3Al) in 25 hours of tests dissolved so that it was not possible to section it for weighing.

Tests have proved that implementation of the material on the basis of NiAl intermetallide within an MCFC can be promising. NiAl powder (ПВ-Н70Ю30) has been produced by the Russian industry for a long time, and that could also be counted in favor of further research on implementation of these materials in MCFC.

1.4. Description of the works of Quarter 5 on **Tasks 4.1, 4.2, 4.3.**

Task 4.1. *Development of Ti-V and Ti-Nb alloys.*

Deliverables: Protocol of research into corrosion resistance of the alloys – Quarter 5: fabrication and delivery of the pilot samples to ANL –

The preliminary theoretical analysis was carried out, based on the assumption that the needed properties are achieved through the creation of certain phase composition and adjustable combination of submicroregions with definite atomic-crystal, electron and magnet configurations. As a result, the promising alloy compositions were determined to obtain the required linear expansion temperature coefficient (LETC).

These are the Ti-(30-50 mass.%) Nb and Ti-(15-30 mass.%)V alloys.

A technology was elaborated and the Ti- and Nb-based ingots were smelted with the following compositions (% mass): Ti-V (22, 25, 28, 32%V); Ti-Nb (36,38, 40,44 %Nb) by means of 4 - fold remelting with the intermediate processing of the ingot into scobs.

Smelting into 100 -500 g ingots was effected in an electrovacuum furnace. The components of the alloys were dried in a furnace in air atmosphere at 200 ^{o}C during 1 hour to remove adsorption moisture. Then they were pressed into ∅50-mm briquets on a 50-ton press. The obtained briquets were placed on a copper water-cooled pan, following which the melting chamber of the furnace was vacuumed up to the residual pressure of 5×10^{-3} millimeters of mercury. Then argon was feeded into the furnace up to the pressure of 0,5 - 0,6 atm.

Smelting was effected applying electric arc on a tungsten electrode.

After the arc ignition they first smelted a so called “heter” (a piece of titanium cellular, or sponge) in order to remove oxygen from the furnace that may get into the furnace together with argon. “Heter” was held in molten condition during 20-30 s, and then started the ingot smelting.

After complete smelting the melting process was interrupted, the ingot was placed upside-down and smelted once again. To obtain a homogeneous composition, this procedure was consistently executed 3-5 times.

The alloys’ characteristics were studied in both hardened and deformed (by rolling) states using the X-ray and electron microscopy, dilatometry. The temperature interval of studies was between
-196 and 800 ^{o}C.

The phase analysis, texture and the phase lattice parameters at various temperatures were determined applying an X-ray diffractometer with the radiation monochromatized by Cu K_α and Cr K_α. The error in measuring the lattice parameter amounted to 0.0004 nm. It was fixed that at Nb content less than 34% the alloys have the orthorhombic martensite (α''-phase) structure. If the Nb concentration exceeded 38%, the alloys’ structure represented the body-centered cubic β-phase. Detection of abnormal temperature dependence of the α''-phase appeared a fundamental result. The abnormal change of the parameter of the α''-martensite lattice results in the abnormal thermal expansion of the Ti-Nb alloys. Besides the abnormal behavior of the parameter of the lattice of the α''-phase, the reversible change of the phase composition ($\alpha''\Leftrightarrow\beta$) was detected at thermocycling, which in its features is similar to thermoelastic martensite transformation.
Quantitative analysis of depositions into thermal expansion of the reversible change of the orthorhombic martensite ($\alpha''\Leftrightarrow\beta$) quantity and of the abnormal temperature behavior of the α''-phase parameter was made. It was shown that the abnormal behavior of the *b* parameter is a determining factor in the decreased or even negative LETC values. In this connection, combining the α''- and β-phases content, one may realize the values of thermal expansion in the interval
$(-10 \div +10)\times10^{-6}$ K^{-1} in the alloys titan–niobium and titan-vanadium. LETC-temperature dependencies of the Ti-V and Ti-Nb systems are represented in Tables 4.1 and 4.2.

Table 4.1

LETC-temperature dependence of the Ti-V alloy system

T, ^{0}C	LETC, 10^{-6}, K^{-1}			
	Ti-22%V	Ti-25%V	Ti-28%V	Ti-32%V
100	7,4	6,8	7,1	7,3
200	8,2	7,8	7,9	8,1
300	7,8	7,8	8,1	8,6
400	7,7	8,0	8,6	8,9
500	9,7	8,9	9,1	9,1
600	9,8	8,7	9,2	9,3
700	10	8,4	9,1	9,6
800	10,2	8,7	9,4	10,2

Table 4.2

LETC-temperature dependence of the Ti-Nb alloy system

T, ^{0}C	LETC, 10^{-6}, K^{-1}				
	Ti-36%Nb	Ti-38%Nb	Ti-40%Nb	Ti-44%Nb(5кр.)	Ti-44%Nb(8кр.)
100	7,5	7,0	7,7	7,4	7,2
200	8,1	8,1	8,4	8,0	7,8
300	8,2	8,5	8,5	8,0	8,2
400	8,2	8,1	8,4	8,1	8,5
500	10,3	9,2	9,0	8,8	8,7
600	11,0	9,2	9,1	9,0	8,8
700	10,8	9,1	9,2	9,2	8,9
800	10,8	9,3	9,3	9,4	9,0

Task 4.2. *Development of the alloys with low Cr content*

Deliverables: Records of research into the alloys diffusion parameters – Quarter 5;
Shipment (export) of the samples of alloys to ANL – Quarter 7.

Based on the results of thermodynamic analysis and determined regularities between nano-atomic-crystal and magnet structure and phase transformations, the promising range of dopants' concentrations of the alloys of Fe-Ni—Co-Cr system was determined, for which the requirements may be realized (with respect to invar properties and heat resistance), made for metal materials for coupling of high-temperature fuel cells with zirconium ceramics.

These are (mass.%): Fe - base,
Ni - 30 – 45%,
Co - 20 – 40%,
Cr - 6 –20%.

Dilatometric analysis of the alloys was made and the optimal proportions of Ni (30-38%) and Co (20-30%) content were determined, at which the minimal Δ LETC values for the alloys Fe-Ni-Co- (6 – 14% Cr) at the temperatures below 500^{0}C are realized.

Investigations into corrosion resistance of the specimens of alloys are being carried our in the temperature range of (800÷900)^{o}C in the air and gas mixture (H_2+20%CO_2+H_2O) during 1000 hours.

Investigations into Cr diffusion rate from the Cr-containing specimens into cathode materials ($La0,6Sr0,4MnO_3$) in contact planar assemblies with the area 1 square inch at the temperature of $(800\div900)^oC$ during 1000 hours are being carried out.

Task 4.3. Development of ferrite stainless steel (brand 400) with the oxide coating.
Deliverables: coated samples –

Plasma coatings from strontium lanthanum manganate and lithiated nickel oxide were applied onto flat samples of 15X25T and 15X28 steel 28,6mm (~1 dm) in diameter to research on protective coatings within SOFC assemblies. Thickness of the samples was 0,85mm, thickness of the sprayed-on coating was ~ 0,05mm.

To increase the density and the strength of adhesion between $La_{0.6}MnSr_{0.4}O_3$ coating and the substrate its longer thermal treatment was tried out (7 hours instead of 40 minutes in previous experiments) in vacuum at 900^0C. However, under these conditions there was no reduction of porosity and increase of the coating adhesion detected.

Preliminary works are being done to make the samples with the area of $100cm^2$ to be sent to the Customer.

II. Completed Stages.
Woks on Tasks 1.4 and 2.4 are finished.
Works on Tasks 1.5, 2.3, 3.7, 3.8, 4.1, 4.2 and 4.3 will be continued in the following quarters in accordance with the Work Plan of the Project.

III. Summary of Personal Commitments.

In the works implementation there participated totally 213 specialists – Project participants, including the personnel from RFNC-VNIIEF -188, the personnel of IHTE - 8, the personnel of RFNC-VNIITF 17. Labor input breakdown on different categories and participating institutions is presented in Table 3.

IV. Major Equipment Acquired.

№ ii	Position	№ of request	Serial number	Inventory Number	Price, $
1	Computer NCTC GA C1100	041718 от 10.09.2003	2003AN0053	2281p/0705/2003/033	417
2	Copying machine Canon FC-228	041718 от 10.09.2003	7239A021	2281p/0705/2003/034	300
3	Monitor SAMTRON 17 inch 76E	041718 от 10.09.2003	AN17HSBW 635956X	2281p/0705/2003/035	153
4	Printer CANON LBP–810	041718 от 10.09.2003	KMXC076772	2281p/0705/2003/036	197

5	NCTC SL-AMD VX1700	18.07.2003	2003AG0067	2281p/32/03/2002/019	1158
6	Monitor NEC 19 inch FE991SB	18.07.2003	3200105YB	2281p/32/03/2002/020	412

ISTC did not acquire equipment for IHTE and RFNC-VNIITF in the fifth quarter.

V. Most Important Business Trips

Participation in the 2nd All-Russia Workshop: Fuel Cells and Power Plants on their Basis («ТЭЭУ-2003») (Novosibirsk, June 29 – July 2, 2003)

- an oral presentation «Influence of Electrolyte Impurities on Operation of MCFC». Authors: A.M. Gorelov[1], S.I. Malevanny[1], V.I. Malinov[1], G.G. Savkin[1], L.N. Smetanin[1], T.Kaun[2]. [1]RFNC-VNIIEF(Russia), [2]Argonne National Laboratory (USA).
- a poster «Development of a Method to Measure Resistance of the Contact of the Separator and Electrodes of a Molten Carbonate Fuel Cell». Authors: S.V. Mishanin[1], N.G. Kozhukhar[1], I.G. Shein[1], K.A. Aleksandrov[2], N.N. Batalov[2], V.Y. Kudiakov[2], S.M. Perin[2]. [1]RFNC-VNIIEF, [2]IHTE , Ural Department of the RAS.

Manager of Project #2281p ***A. M. Gorelov***