PRELIMINARY ENGINEERING DESIGN OF A 57.5 MHz CW RFQ FOR THE RIA DRIVER LINAC[1]

J.W. Rathke, T.J. Schultheiss,
Advanced Energy Systems, Inc. 27E Industrial Blvd., Medford, NY 11763
P.N. Ostroumov, A.A. Kolomiets[2]
Physics Division Argonne National Laboratory, Argonne, Ill. 60439
D.L. Schrage
Los Alamos National Laboratory, M/S H817, Los Alamos, NM 87545

Abstract

A Continuous Wave (CW) Radio Frequency Quadrupole (RFQ) accelerator is being designed for the Rare Isotope Accelerator (RIA) Driver Linac. This device is required to accelerate a wide variety of species as well as perform simultaneous acceleration of multiple charge states. As such, the structure must operate over a wide range of RF power dissipation from ~0.65 kW to 48 kW. The physics design of this pseudo split-coaxial RF structure has been established by ANL in collaboration with ITEP (Moscow) and the preliminary engineering design is under way at AES. The design addresses the requirements for efficient cooling throughout the structure, precise alignment, reliable RF contacts, and fine tuning capability. The favored approach employs furnace brazing for fabrication of details and complete RFQ segments. Six longitudinal segments are mechanically assembled to form the complete 4-meter RFQ structure. Other methods of fabrication and/or assembly such as electroforming remain under consideration. This paper will discuss the engineering design and the trade studies performed to arrive at the primary configuration.

1 REQUIREMENTS

The basic requirements of the 57.5 MHz RFQ are given in Table 1. The design requirements are driven by the need for operation over a range of cavity power of 0.65kW to 48kW to allow acceleration of masses from protons up to uranium. It is desirable to operate without the use of mechanical tuners. Therefore, the goal of the design was to arrive at a configuration that, via manipulation of cooling water temperature, can maintain a single operating frequency over this wide range of power levels. The RF design of the RFQ[1] is a pseudo split coaxial structure as shown in Fig. 1. This device has very good power efficiency and very stable fields. The mechanical design shown in Fig. 2 depicts the segmented approach to fabrication and shows the locations for 22 fixed frequency tuners and two drive loops.

Table 1: RIA RFQ Design Requirements

PARAMETER	VALUE
Duty Cycle	100% (CW)
Operating Frequency	57.5 MHz
Operating Temperature	~Room Temp
Cavity Type	Pseudo split-coaxial
Input β	0.00507
Charge to Mass Ratio	≥ 28.5/238
Vane Length	392 cm
Peak Surface Field	<1.25 Kilpatrick
Total RF Power (Cavity)	48 kW Max.
Peak Power Density	8.28 W/cm2

REQUIREMENT	VALUE
Vane Deflection	+/-100 µm (0.004")
Power Dynamic Range	70:1
Allowable Δf (Tuning Range)	+/-4 kHz

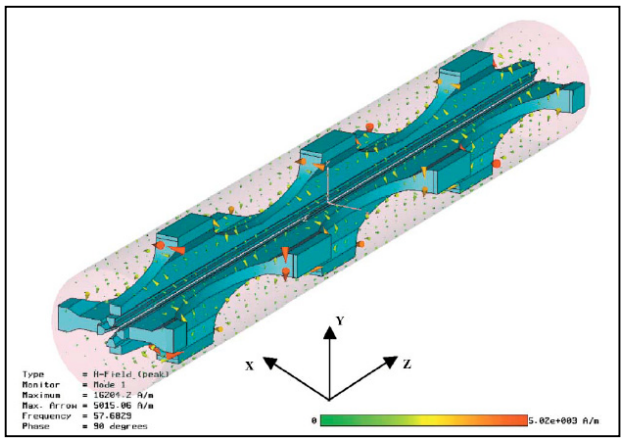

Figure 1: Microwave Studio Plot of Magnetic Fields in Pseudo Split Coaxial RFQ Structure [1]

2 DETAILED DESIGN

The cavity preliminary design consists of six nearly identical longitudinal segments. A typical segment with cutaway sections to show the cooling passages is shown in Fig. 3. The channels in the vanes are tailored to match the power dissipation pattern in the structure which peaks

[1] Work supported by Argonne National Laboratory under Contracts 2F-00301 and 2F-02041. ANL is supported by the U.S. Department of Energy, Nuclear Physics Division, under Contract W-31-100-ENG-38.
[2] On leave from the Institute of Theoretical and Experimental Physics, Moscow.

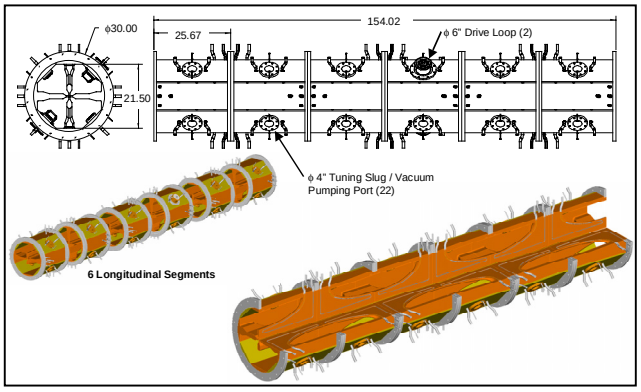

Figure 2: RIA RFQ Cavity Assembly

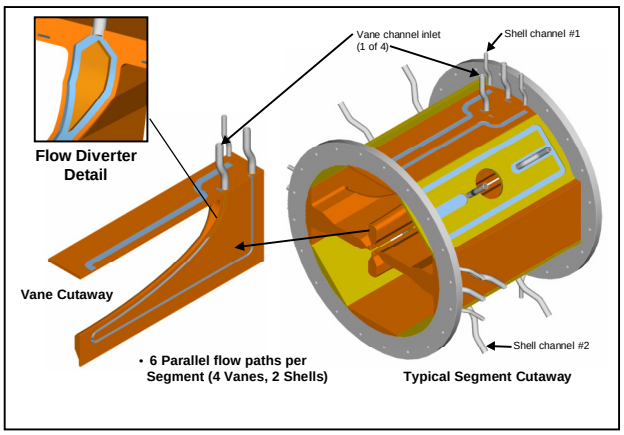

Figure 3: Segment Detail with Cooling Channels

near the cavity walls in the elliptical openings in the vanes. The inlet flow of the coldest coolant (20º C for the analysis) is directed into the vanes where a flow diverter directs the flow out to the edges with the highest dissipation (see Fig. 5 and ref. 2). From here the flow reconverges and flows around the ellipse, along the vane tip, and back out near the segment end flange. The four vanes are cooled in parallel to minimize vane deflections and frequency shifts. The cavity walls are cooled in two separate loops with coolant inlet temperatures modulated to keep the RFQ resonant frequency at the target value. One loop cools the cavity walls on the outside of four the elliptical vane cut-outs, while the other loop cools the four cavity walls where the tuners and drive loops are located. These series flow loops are connected in a counter-flow scheme to keep average temperatures uniform around the structure. By varying the inlet temperature of the wall channels between 20º C and 31.2º C, the steady state frequency shift can be maintained at zero over the full range of cavity power settings from 0.65 kW to 48 kW respectively [2].

3 FABRICATION APPROACH

Several different approaches to fabrication of the RIA RFQ were discussed during the conceptual design phase. The approaches could be broken down into three primary schemes. In the first scheme, machined and brazed vane details would be mechanically joined to a cavity cylinder with a welded and/or electroformed RF joint. The second scheme would employ electroformed assembly of machined and brazed vanes into a cavity cylinder or possibly a fully electroformed cavity cylinder. The third scheme that was ultimately chosen for the preliminary design effort is to have a fully brazed assembly using step brazing to fabricate the vanes and quadrant details and finally a complete segment with end flanges. This approach borrows heavily from the techniques used successfully on the LEDA RFQ at Los Alamos [3].

The RFQ is designed as a 100% OFE copper structure with either Glidcop or 304 SST end flanges. The fabrication process begins with machining of the cooling channels into oversized OFE copper blanks and performing a high temperature braze for assembly. Fig. 4 and 5 illustrate the process for the vane blanks and for the quadrant blanks. We plan to use 35-65 Au-Cu alloy at 1880º F for this braze step.

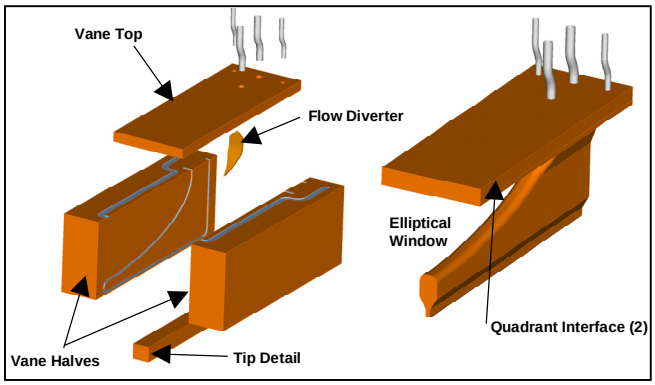

Figure 4: Vane Subassembly Scheme

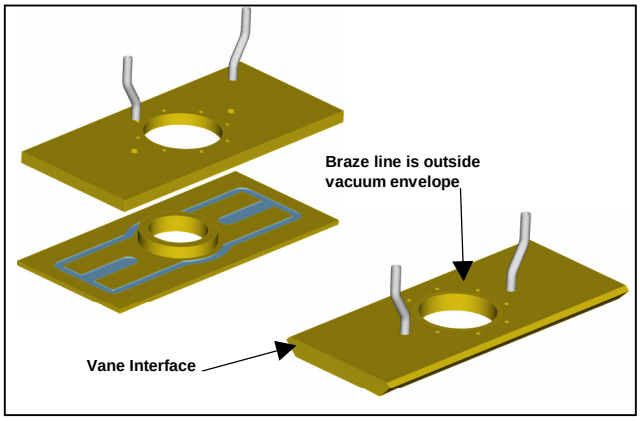

Figure 5: Quadrant (Shell) Subassembly Scheme

With the cooling channel braze step complete, the detailed parts are machined in preparation for the next assembly step. In each segment there are two “major” vanes and two “minor” vanes. At this point in the process the minor vanes are machined to their finished condition and are ready for segment assembly and tuning. This includes the finishing of all surfaces including the modulated vane tip. The only surfaces left oversized are the braze surfaces for connection to the cavity walls. These surfaces are machined during the tuning step.

Completion of the major vane assemblies requires partial machining of the vane detail and two quadrant details followed by an assembly braze step and by final machining. This sequence is illustrated in Fig. 6. Prior to

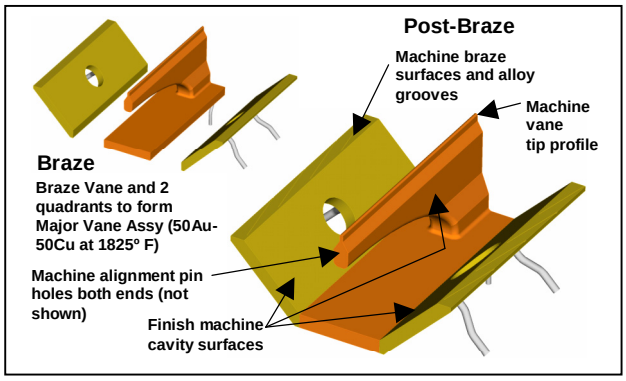

Figure 6: Major Vane Subassembly Scheme

the braze step the elliptical cut-out in the vane is finished along with the braze contact surfaces on both the vane detail and the quadrant details. After brazing with 50-50 Au-Cu at 1825º F the remaining surfaces are finish machined including the modulated vane tip. Finishing of the braze surfaces for the segment assembly braze also includes angled grooves for the braze alloy.

At this point the two major vane assemblies and two minor vane assemblies are brought together for tuning and final assembly as shown in Fig. 7. With the four vane assemblies mounted in a tuning fixture (not shown) the

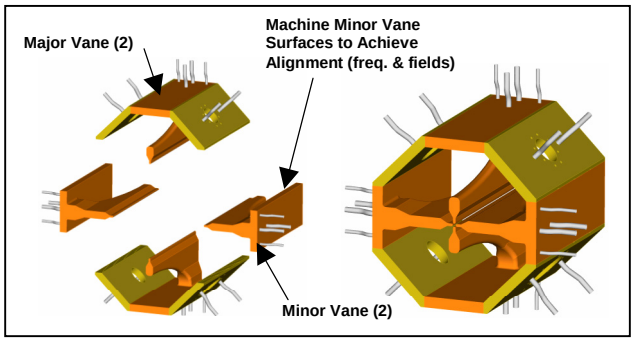

Figure 7: Pre-Braze Tuning

required machining of the braze surfaces on the minor vanes is determined by performing field and frequency measurements. Once the proper RF performance is achieved the vane assemblies are pinned together and braze tooling is installed to fixture the segment for the final assembly braze. The interface on the ends to the flanges is also machined at this time. Fig. 8 illustrates the sequence of steps leading up to the final segment assembly braze using 72-28 Cu-Ag at 1455º F. This alloy has the desirable property of thoroughly wetting a zero clearance joint. As such the cavity assembly has no braze foils in the joints that can cause movement during the braze cycle. The alloy resides solely in the discrete machined slots in the braze surfaces and fully wets the joint by capillary action.

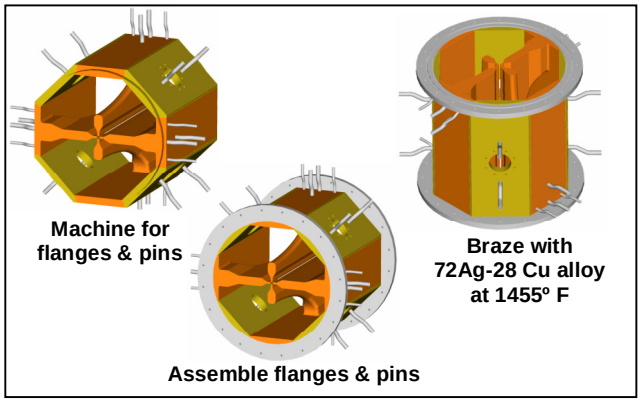

Figure 8: Segment Final Braze Assembly

4 SUMMARY

Fig. 9 illustrates the conceptual final assembly of the RIA RFQ. The cavity assembly has good stiffness and is

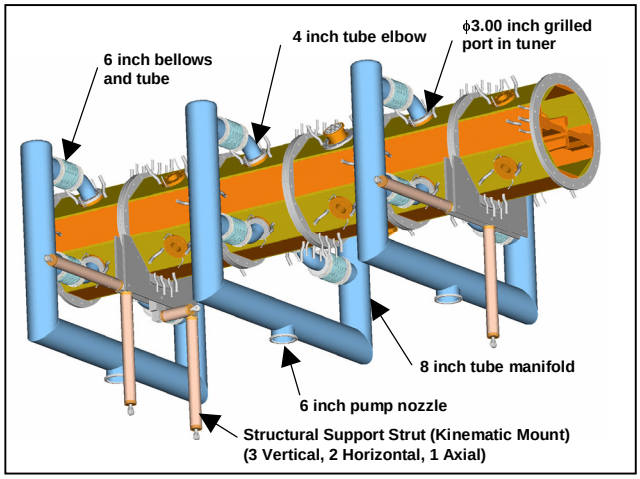

Figure 9: Final Assembly with Vacuum and Supports

well suited to a kinematic mounting scheme as illustrated. A distributed vacuum system consisting of three manifolds pumping through grilled tuner ports appears suitable for this application. The RFQ design presented here appears robust and highly flexible for this demanding application. The RIA team is currently in the process of designing and fabricating a cold model and a full-power engineering prototype of a single segment.

5 REFERENCES

[1] P. Ostroumov, et al, "Design Of 57.5 MHz CW RFQ for Medium Energy Heavy Ion Superconducting Linac"; Physical Review Special Topics Accelerator and Beams 5, 060101 (2002); http://prst-ab.aps.org/abstract/PRSTAB/v5/i6/e060101

[2] T. Schultheiss, et al, "RF, Thermal, and Structural Analysis of the 57.5 MHz CW RFQ for the RIA Driver Linac"; Paper ID TU467, These Proceedings.

[3] D. Schrage, et al., "CW RFQ Fabrication and Engineering," Proceedings of LINAC98, Chicago, IL, Aug. 1998.