ANL-00/22

ARGONNE NATIONAL LABORATORY
9700 South Cass Avenue
Argonne, Illinois 60439

Preliminary Assessment of the BREST Reactor Design and Fuel Cycle Concept

by

H. Khalil, M.J. Lineberry, J.E. Cahalan,
J.L. Willit, B.W. Spencer, S.L. Hayes,
D.C. Crawford, D.C. Wade, and D.J. Hill

May 2000

TABLE OF CONTENTS

Page

EXECUTIVE SUMMARY 1
1.0 INTRODUCTION AND SCOPE OF THE ASSESSMENT 5
2.0 OVERVIEW OF BREST AND ITS DEVELOPMENT RATIONALE 6
2.1 Development Rationale 6
2.2 Development Goals and Approach 6
2.3 Overview of Development Status 9
3.0 ASSESSMENT OF THE BREST NPP 10
3.1 Lead Coolant 10
3.2 Nitride Fuel 13
3.3 Lattice and Core Design 15
3.4 Heat Transport System 18
3.5 Reactor Structure and Refueling 20
3.6 Containment and Decay Heat Removal 26
3.7 Inspectability/Repairability 27
3.8 Safety Performance 27
3.9 Cost-Reduction Strategy/Rationale 29
4.0 ASSESSMENT OF THE BREST FUEL CYCLE 30
4.1 BREST Fuel Cycle Features 30
4.2 Proliferation-Resistance Features of the BREST Fuel Cycle 31
4.2.1 Intrinsic Proliferation Resistance 32
4.2.2 Safeguards Considerations with BREST Systems 35
4.3 Radiation-Equivalent Waste Disposal 37
Bibliography 39

LIST OF FIGURES

Page

3.3.1 Cross-Section of the BREST-300 Core 16

3.4.1 Elevation View of BREST-300 19

3.5.1 Plan View of the BREST-300 Reactor 21

3.5.2 Pool-Type Variant of the BREST-300 Reactor Configuration 23

3.5.3 Concrete Cooling System in the BREST-1200 Reactor 24

3.5.4 Multiple-Silo Variant of BREST-300 25

LIST OF TABLES

Page

3.3.1 BREST-300 Fuel Assembly and Core Design Parameters 17

PRELIMINARY ASSESSMENT OF THE BREST REACTOR DESIGN AND FUEL CYCLE CONCEPT

EXECUTIVE SUMMARY

A preliminary assessment has been performed of the BREST reactor design and fuel cycle concept being developed by Russian Federation nuclear-power design organizations and research institutes. BREST is an advanced nuclear power concept employing a fast-spectrum reactor, liquid lead coolant, uranium-plutonium nitride fuel, and a pool type plant configuration featuring design simplification and passive "deterministic" safety as targeted means of achieving cost reduction. A closed fuel cycle that avoids separation of fissile materials, retains a fraction of the fission products in recycled fuel, and minimizes discharge of long-lived radio-toxic nuclides is proposed for eventual large-scale deployment.

While the main goal of the assessment documented here was to evaluate the proliferation resistance of BREST, the scope of the assessment was broader, encompassing technical feasibility, potential for economic competitiveness, and acceptability of environmental and proliferation impacts. This broader assessment recognizes that overall system viability is essential to its deployment prospects and potential for impacting proliferation resistance of nuclear power in the future.

BREST is envisioned by its developers as a large-scale energy supply option for the future. A fundamental goal underlying its development is thus to make efficient use of uranium resources. The fuel cycle favored by its developers is a *slightly* breeding uranium-plutonium fuel cycle, and this dictates the use of a fast spectrum reactor. The choice of a U-Pu cycle is motivated in part by the incentive to make use of the large amount of Pu in spent fuel from light water reactors and the weapons-derived Pu rendered surplus as a result of disarmament. Additional key development goals are to achieve competitive economics, preclude severe accidents, minimize the environmental impacts of waste, and attain a high degree of proliferation resistance.

The status of BREST as an integrated nuclear power system design is rather non-uniform, with the *reactor plant* component of the overall concept having reached a considerably more advanced state of development than the *fuel cycle* component. Since the proliferation risks are dominated by the fuel cycle design, the proliferation resistance assessment in this paper is quite preliminary and is based in part on experience with the similar fuel cycle approach previously developed in the U.S. Integral Fast Reactor and EBR-II Spent Fuel Treatment programs.

Even though the goals for the BREST fuel cycle have been enumerated in considerable detail, explicit features of this fuel cycle are largely unspecified at the present time. Several candidate technologies are undergoing screening evaluations aimed at identifying the most promising options for spent fuel processing, nitride fuel re-fabrication, waste stream treatment, and waste form production. Significant effort will be required to identify, develop and demonstrate these processes, as well as to design equipment and facilities to support their implementation. Judging from past experience in the U.S. and Russia with development of "dry" recycle technologies, several key fuel cycle goals appear to be achievable (e.g., avoiding separation of Pu and arranging for its "self-protection" by a radiation barrier at all fuel cycle stages). On the other hand, achieving the targeted actinide recovery factors and waste stream purity levels will be a significant challenge.

The BREST reactor plant is currently in the conceptual design stage. While incorporating a number of design innovations that hold promise for meeting the performance goals previously enumerated, several key

technologies employed in the design are at an early stage of development and validation. Significant uncertainties related to plant design and performance include the irradiation performance and transient behavior of U-Pu nitride fuel, the effectiveness of coolant chemistry control techniques in limiting corrosion of structural materials, the reliability of systems designed to maintain the Pb coolant above its melting point, the feasibility of operating and controlling a reactor with an exceedingly small margin of control (particularly with recycled fuel of uncertain composition), and the feasibility of achieving "deterministic safety" and competitive economics.

Based on the limited available information about the BREST fuel cycle, the following observations are made regarding the proliferation resistance features targeted for BREST:

Reactor Characteristics and Operation

The small reactivity margin in BREST, enabled by the slightly breeding core, is argued to eliminate the possibility of loading low-reactivity natural or depleted uranium target materials (which are not subject to material accounting) in order to produce high-grade Pu. This approach should enhance proliferation resistance, but its benefit is probably overstated because the ability to produce excess Pu, while reduced, is not entirely eliminated. To begin with, the targeted near-zero reactivity margin may not be achievable in practice because of such factors as fuel composition variability, fuel manufacturing tolerances and reactivity modeling uncertainties. Moreover, high-grade-Pu could probably still be produced by loading low-enriched uranium assemblies in core locations or by irradiating natural or depleted uranium in control assembly locations or in ex-core positions. It should be noted, however, that such actions are generally thought to be detectable within the safeguards regime and generally long times are needed to generate useful quantities of weapons grade materials.

One refueling option under consideration (for BREST-1200) is on-load refueling at reduced power. This is argued to substantially reduce fuel assembly storage requirements and to reduce the risk of material theft or diversion, which is presumably greater while assemblies are in storage than when they are being irradiated or processed. The overall proliferation-resistance benefit of this approach is questioned because on-load refueling provides nearly continuous access to the fuel assemblies in the core. Moreover, the advantage of fewer assemblies in storage locations is limited because fresh and spent fuel both are subject to straightforward item accountability in the safeguard regime.

Fuel Cycle Facilities

Co-location of fissile-self-sufficient BREST reactor plants and their individual fuel cycle facilities would substantially eliminate the need to transport nuclear materials. This should reduce the threat of material theft, but the larger number of fuel cycle facilities required, in comparison to the approach of using large centralized fuel cycle facilities, may increase or complicate safeguarding requirements overall.

Spent Fuel Processing Options

Several options are considered for processing of irradiated BREST fuel for recycle. One of the options is *aqueous extraction*, a modification of the PUREX process aimed at making the separation of high purity Pu impossible. The chemistry of such a process, if successfully developed, is unlikely to be inherently proliferation resistant because of the apparent feasibility of perturbing the process and equipment back

toward PUREX. At minimum, the use of a modified PUREX separation process for BREST would continue to place a heavy burden on the safeguards regime.

The *fluoride volatility* option under consideration similarly does not appear to be intrinsically proliferation resistant because of its potential for effecting actinide separations at a comparatively high rate. Moreover, the U.S. experience with this process revealed significant materials problems (corrosion of process equipment) that must be overcome for the process to be viable.

The *molten-salt electrorefining* option is judged, based on U.S. experience, to have the greatest degree of intrinsic proliferation resistance because it accommodates short-cooled, highly radioactive fuel and does not produce a high purity Pu product. Many aspects of a similar process have been demonstrated by ANL on a pilot scale with spent EBR-II metallic fuel. Its application to nitride fuel is enabled by that fuel's significant electrical conductivity. An alternative process described in Russian papers is a *molten-salt extraction* process employing similar redox chemistry as electrorefining and therefore exhibiting similar intrinsic proliferation resistance.

Two additional processes (*metallurgical refining* and *annealing*) are insufficiently developed to judge their viability or proliferation resistance potential.

Although not specifically related to conditions or operations of any particular process, a goal characterized as "desirable" in the BREST fuel cycle strategy is the separate extraction of neptunium and curium from irradiated fuel -- apparently to facilitate fuel re-fabrication. This objective appears to be directly at odds with the proliferation resistance objective of process-inherent co-extraction of Pu with uranium and minor actinides.

Fuel Fabrication

Remote fabrication of fuel from highly radioactive feedstock provides an intrinsic barrier to material diversion or theft. The ceramic fuel fabrication processes required to fabricate pellet nitride fuels, the fuel form employed in the BREST-300 design, are established and have been widely used, but they have never been implemented in a totally remote, hot cell environment as would be required for the BREST fuel feed material that retains significant levels of radioactivity after reprocessing. Use of vibro-compacted nitride fuel in BREST is apparently under consideration as an alternative to the pellet form. This vibro-compaction fabrication option may be easier to implement in a remote environment; experience with its use is at present limited mainly to fabrication of uranium-oxide fuel for the BOR-60 experimental fast reactor.

Waste Streams

U.S. experience with treatment of spent EBR-II fuel using an electrometallurgical process indicates that recovery and recycle of 99.9% or more of the actinides is a very difficult goal to achieve with dry recycle technologies, unless secondary treatment processes are employed. If a significant fraction of the process throughput must be sent to a secondary treatment to effect the targeted recovery, then these secondary streams and processing steps will have a strong effect on the overall system's inherent proliferation resistance and associated safeguards requirements.

Safeguards Considerations

Successful implementation of BREST fuel cycle goals aimed at enhancing inherent proliferation resistance can potentially reduce institutional and active safeguards requirements and their costs. Even so, considerable reliance will still need to be placed on the traditional safeguards norms of containment-and-surveillance and materials-control-and-accountability. Of concern will be the ability of the IAEA both to monitor materials and to verify that the fuel cycle facilities are being used only for authorized activities. A BREST system would represent a new situation for the IAEA in terms of both verification and detection. Whichever fuel cycle concept is chosen, the BREST concept involves actinide and fission product carryover into recycled fuel. This will cause unique challenges in material and process monitoring due to the resulting remote nature of the process. Specific challenges include verification of material in-flows to the fuel cycle facility and of material holdup in process equipment. Remote monitoring of process signals and capabilities to automate the verification of these signals will need to be developed.

In summary, BREST is an advanced nuclear power concept that seeks to address fundamental challenges to widespread use of nuclear power, including competitive economics, safety, benign environmental impacts and acceptable proliferation risks. Its goals are therefore similar to those of "Generation-IV" nuclear power technology. While the BREST design incorporates a number of features aimed at meeting these goals, it is insufficiently developed to judge its overall viability; its fuel cycle design, in particular, requires further development. Continued assessment of the concept, as it is further developed in Russia, is required to reach more definitive conclusions about its viability and potential for attaining a high degree of proliferation resistance.

1.0 INTRODUCTION AND SCOPE OF THE ASSESSMENT

A preliminary evaluation has been performed of the BREST reactor plant design and fuel cycle concept, which are being developed by Russian Federation (RF) nuclear energy research institutes and design organizations. This preliminary evaluation was conducted as a starting point for the in-depth assessment proposed by the RF Ministry of Atomic Energy (MINATOM) as one element of a bilateral program with the US Department of Energy (DOE) aimed at enhancing the proliferation resistance of civilian nuclear power fuel cycles. BREST is an advanced nuclear power concept employing a fast spectrum reactor, liquid lead coolant, uranium-plutonium nitride fuel, and a pool type plant configuration featuring design simplification and passive "deterministic" safety as principal means of cost reduction. A closed fuel cycle that avoids separation of fissile materials, retains a fraction of the fission products in recycled fuel, and minimizes discharge of long-lived radio-toxic nuclides is proposed for eventual large scale deployment. The assessment documented here is based primarily on a review of published Russian reports and on limited prior interactions with Russian scientists and engineers.

The scope of this preliminary assessment includes a review of the rationale and goals for the system (reactor plant and fuel cycle) and an assessment of system design features and their potential to meet system performance goals, including the goal of enhanced proliferation resistance. Although the proposed bilateral program is sharply focused on enhancing proliferation resistance of current and future fuel cycles, the broader assessment documented here recognizes that overall system viability (i.e., economics, safety, benign environmental impacts, etc.) is imperative to its deployment and potential for impacting proliferation resistance of nuclear power in the future. Accordingly, this assessment considers technical feasibility, potential for economic competitiveness, and acceptability of environmental and proliferation impacts.

This paper concentrates primarily on the reactor plant design and fuel cycle for the BREST-300 (300 MWe) system, which has been developed to the conceptual design level. BREST-300 is a prototype for larger systems, particularly BREST-1200 (1200 MWe system). The BREST development philosophy favors the larger unit as the form of eventual widespread deployment because it is believed to hold greater promise for economic competitiveness.

The outline of this paper is as follows: Section II provides an overview of the BREST development goals and design rationale. Section III addresses the BREST *reactor plant design*; it describes (a) the main elements and features of the plant design, (b) the current status of knowledge of the technologies employed in the design, (c) the development and testing efforts needed to demonstrate system design features, and (d) the effectiveness of the design in meeting system goals. Section IV focuses on the BREST *fuel cycle*; it describes the main features of the fuel cycle (fuel form, fuel fabrication technology, recycle strategy and technical options, and waste management technologies). Section IV also outlines requirements for demonstrating these fuel cycle technologies and assesses the proposed fuel cycle approach against the system objectives, particularly those related to proliferation resistance.

2.0 OVERVIEW OF BREST AND ITS DEVELOPMENT RATIONALE

This section describes the rationale underlying the development of BREST, outlines system design goals for the fuel cycle and the reactor plant, and summarizes the current development status.

2.1 Development Rationale

BREST is an advanced nuclear power concept directed toward meeting the future energy needs of the world's growing population and expanding economies. Exclusive reliance on alternative energy supply options is argued by proponents of BREST to be neither economically viable nor environmentally acceptable. Russian papers identify the following issues related to energy supply alternatives:

- Inexpensive sources of hydro-carbon fuels (oil and natural gas) will be gradually depleted and their prices will rise; policies that supplier nations adopt to manage their shrinking resources create the potential for international conflicts.

- Increased reliance on coal would reverse the historic trend toward cleaner fuels with lower carbon-to-hydrogen ratio and is unacceptable because of increased combustion emissions and concerns about the role of these emissions in global climate change.

- Alternative, renewable energy forms will not provide a viable, large scale and economical energy option during this century; the same applies to fusion power.

- Conventional nuclear power (e.g., light water reactors operating on a once-through cycle) is incapable of meeting future energy needs due to its inefficient use of limited resources of inexpensive uranium. If their current share of electricity production is maintained, these reactors are projected to exhaust U resources in about forty years. Recycle of the plutonium in discharged fuel would reduce the U depletion rate incrementally, but this option is not economically attractive, and the technology for recovering Pu for recycle (PUREX reprocessing) is directly applicable to production of weapons.

These arguments motivate development of a new nuclear fuel cycle that makes use of uranium fuel resources more efficiently. The fuel cycle favored by proponents of BREST is a slightly breeding uranium-plutonium fuel cycle. The targeted breeding ratio (ratio of fissile Pu production to fissile destruction) is about 1.05. This ratio is tailored to the anticipated need for growth of electricity generation capacity and is modest in comparison to breeding "requirements" of past projections. The choice of a U-Pu cycle is motivated in part by the incentive to make use of the large amount of Pu in spent fuel from light water reactors and the weapons-derived Pu rendered surplus as a result of disarmament.

2.2 Development Goals and Approach

The BREST development approach is strongly driven by the choice of a *slightly* breeding fuel cycle, and by the need for *any* new nuclear energy system to address significant obstacles to its acceptance and widespread use. The development goals and resulting approach are briefly reviewed below.

Efficient Use of Uranium

Projections cited in Russian papers indicate that a nuclear generating capacity of 8000 GWe is achievable early in the 22nd century via the use of a slightly breeding fuel cycle. The Pu, and possibly the U-235, in spent fuel would be employed in the initial stages of this growth scenario. The requirement for a breeding U-Pu cycle dictates the use of a fast spectrum reactor. However, the comparatively modest breeding requirement motivates re-examination of the design approaches and constraints adopted in the past for developing fast reactors, which emphasized a high breeding ratio and a short time for doubling the Pu inventory. The relaxation of the breeding requirement is viewed as an opportunity to redesign fast spectrum reactors with greater emphasis on satisfying economic, safety, environmental, and non-proliferation criteria.

Minimizing Environmental Impacts of Waste

The uncertainties inherent in confining nuclear waste and precluding adverse ecological impacts of its slowly decaying radio-toxicity for million-year time scales motivate the approach adopted by BREST developers for dealing with spent fuel and nuclear waste. This approach is referred to as "radiation-equivalent waste disposal" and is advocated as a *requirement* for future nuclear power systems. The basic elements of this approach are: (a) co-extraction of the long-lived products of U decay (primarily Th and Ra) with U from uranium ore, for management along with other actinides in the fuel cycle; (b) return to the reactor of the actinides in the spent fuel via recycle technologies affording high recovery factors for the key actinides (U, Pu, Am); (c) reducing the fraction of actinides in the recycle waste streams to 0.1% or less by suitable treatment; (d) recovery of 90% or more of the Cs and Sr fission products from the spent fuel for use as radiation or heat sources; (e) recovery of 90% or more of the long lived I and Tc fission products for transmutation in the reactor; (f) incorporation of the treated waste into mineral like materials which are not prone to dissolution or migration in the soil; and (g) disposal of the immobilized waste in depleted uranium mines or other geologic formations. Russian evaluations indicate that the radiation hazard of this waste is equivalent to that of the uranium ore originally removed from the earth.

Proliferation Resistance

The BREST approach to mitigating proliferation risks has the following main elements:

a. Fissile materials are consigned to the reactor plant and associated fuel cycle facilities, wherein their safeguarding can be accomplished cost-effectively, in part because of the self-protection afforded by their intense radioactivity at all stages of the closed cycle.

b. Recycle of fuel discharged from the BREST reactor is accomplished without separating Pu from the radioactive mix of U, Pu and other actinides. This is enabled by designing the reactor *core* for a breeding ratio (CBR) slightly greater than one and thereby *avoiding the use of blanket assemblies*. As a result, the fissile content of the spent fuel is sufficient for re-use in the reactor without reliance on plutonium bred in blanket assemblies to compensate for fissile depletion in the core. The main requirement placed on the recycle technology is thus to replace a sufficient proportion of the fission products with makeup uranium feedstock.

c. A fraction of the fission products (between 1 and 10%) is retained with the recycled fuel material at all stages of recycle and fuel fabrication to further reduce the attractiveness of the actinide fuel mixture for weapons applications.

Initial PUREX processing of LWR spent fuel would be needed to derive the startup Pu inventory in an aggressive (rapid) deployment scenario. The BREST fuel cycle developers envision that the required separations can be performed in nuclear weapons states or at specially safeguarded international centers. Recovery of Pu from spent fuel in this manner, for use in the BREST fuel cycle, is argued to diminish the proliferation risks inherent in the steady accumulation of LWR-origin Pu in spent fuel storage pools or other spent fuel disposal sites. Finally, the ability to employ weapons-origin Pu in the BREST fuel cycle is argued to facilitate the safeguarding of this Pu in comparison to alternative disposition options.

Deterministic Safety

The safety approach adopted in BREST aims to preclude severe accidents that may result in fuel failure and release of radioactivity by exploiting natural phenomena and *intrinsic* characteristics of a properly designed liquid metal cooled, fast-spectrum reactor plant. These characteristics include low system pressure, large heat capacity, natural circulation flows, negative temperature coefficient of reactivity, chemically inert materials, and low excess reactivity. The goal of this "natural safety approach" is to make the reactor plant essentially immune to human errors or to failure of equipment or engineered safety systems. All potential accidents, aside from massive external forces (e.g., impact of an asteroid or nuclear attack), are thus considered within the design basis. This approach avoids reliance on probabilistic arguments and analyses for substantiating reactor safety and is therefore labeled "deterministic safety".

The BREST deterministic safety goal is synergistic with the fuel cycle approach employing a core breeding ratio slightly greater than unity (CBR = 1.05). With CBR slightly exceeding one, the fissile mass increases slightly over an operating cycle and compensates for the reactivity loss associated with buildup of fission products and change in fuel isotopic composition. As a result, the reactivity change over an operating cycle due to fuel depletion (burnup reactivity swing) is essentially zero. This greatly reduces the excess reactivity requirement and the potential for reactivity insertion accidents.

Relaxation of the short doubling time requirement generally adopted in the early days of fast reactor development permits adoption of lower power density (higher fissile inventory) designs employing liquid heavy metal coolant. Minimization of doubling time had in the past dictated the use of "tight lattice" cores (small fuel pin pitch to diameter ratio and corresponding low coolant volume fraction) and strongly motivated use of sodium as coolant. Sodium has excellent heat transfer properties, but its potential to react energetically with air or water creates safety challenges and complicates reactor design. The coolant used in BREST is liquid lead, which unlike sodium, does not react energetically with air or water. Although pumping power requirements with lead are excessive in tight lattice cores designed for a short doubling time, the increased coolant fraction and reduced power density of the BREST design substantially mitigate this disadvantage. The main drawbacks of liquid lead as a coolant derive from its heavy weight, high melting temperature and tendency to corrode structural steels.

The fuel used in the BREST design is uranium-plutonium nitride, which has high thermal conductivity and low stored energy and therefore small reactivity effects associated with fuel temperature change. These characteristics make it possible to minimize excess reactivity and facilitate passive accommodation of loss of flow sequences.

Economics

Achievement of competitive economics is an essential requirement on future nuclear power systems. The designers of BREST argue that this requirement cannot be met through incremental or evolutionary modifications of existing LWR's, because this approach can reduce costs by only a few percent, whereas reductions approaching a factor of two are sought. The BREST approach to cost reduction exploits the system's targeted level of "deterministic safety" to simplify the plant design substantially in comparison to conventional fast or thermal reactor plants. The level of safety targeted in the BREST design significantly reduces requirements on basic and auxiliary systems, plant structures, and personnel, and eliminates the need for a variety of safety systems.

One readily apparent simplification of the BREST design is the elimination of the entire intermediate heat transport circuit and its associated systems. In BREST, the steam generator is placed directly in the liquid metal pool along with the entire primary coolant system. This simplification is enabled by the use of lead as the primary coolant, which eliminates the possibility of energetic reactions with the water/steam secondary coolant in the steam generator.

2.3 Overview of Development Status

The status of BREST as an integrated nuclear power system design is rather non-uniform, with the reactor plant component of the overall concept having reached a more advanced state of development than the fuel cycle component.

The BREST reactor plant is currently in the conceptual design stage. While incorporating a number of design innovations that hold promise for meeting the performance goals previously enumerated, several key technologies employed in the design are at an early stage of development and validation. Significant uncertainties related to plant design and performance include the irradiation performance and transient behavior of U-Pu nitride fuel, the effectiveness of coolant chemistry control techniques in limiting corrosion of structural materials, the reliability of systems designed to maintain the Pb coolant above its melting point, the feasibility of operating and controlling a reactor with an exceedingly small margin of control (particularly with recycled fuel of uncertain composition), and the feasibility of achieving "deterministic safety" and competitive economics.

Specific features of the BREST fuel cycle are largely unspecified at the present time. Several candidate technologies are undergoing screening evaluations aimed at identifying the most promising options for spent fuel processing, nitride fuel re-fabrication, waste stream treatment, and waste form production. Significant effort will be required to identify, develop and demonstrate these processes, as well as to design equipment and facilities to support their implementation. Judging from past experience in the U.S. and Russia with development of "dry" recycle technologies, several key fuel cycle goals appear to be achievable (e.g., avoiding Pu separation and arranging for self-protection of fissile materials). On the other hand, achieving the targeted actinide recovery factors and waste stream purity levels will be a significant challenge. Another challenge will be to design the recycle processes and equipment such that the potential is minimized for their modification and misuse for the purpose of producing weapons materials.

3.0 ASSESSMENT OF THE BREST NPP

3.1 Lead Coolant

The designers of the BREST-300 reactor concept cite deterministic safety and improved economics as top level requirements, and the choice of molten lead as reactor coolant rather than the traditional sodium is based on those requirements. Previously, sodium was universally adopted as the coolant for the fast reactor breeder mission owing to its superior heat transport properties and low pumping requirements in the tight lattice, high pressure-drop breeder reactor core designs. For a submarine propulsion mission, Russian designers adopted lead-bismuth eutectic coolant to achieve compact, high performance design. This coolant selection was motivated mainly by Pb/Bi's inertness with air and the steam/water working fluid; it resulted in major simplification of the system by elimination of the intermediate heat transport loop (as adopted in BREST), and it simplified core reloading, repair, and maintenance by enabling open head operations. (The latter was discontinued owing to air ingress and resulting PbO slag formation as well as release of radiotoxic Po to the compartments.) An early core melt accident in the prototype Alpha submarine led to intense studies at IPPE to improve the technology, and it was followed by successful deployment of seven high-performance submarines which are said to have been free from reactor-related problems. Lead coolant technology is an extension and extrapolation of the Pb/Bi technology developed at IPPE. The main challenge is to accommodate the high melting temperature of lead (327°C) compared to Pb/Bi (123°C) and sodium (98°C).

As a fast reactor coolant, lead offers important attributes: it is neutronically superior to other liquid metal coolants, it is inert, and it has very high boiling temperature and low vapor pressure. These attributes offer the prospects to design a simple, low cost reactor system with enhanced safety features. The normal boiling point of lead is about 1740°C, compared to about 880°C for sodium. The BREST designers cite the larger margin to coolant boiling and voiding as a deterministic safety advantage. Use of Pb coolant permits the elimination of the intermediate liquid metal heat transfer loop and simplification of steam generator design requirements (e.g., no need for fast-acting leak detection systems and isolation valves). Other measures intended to accommodate the chemical activity of sodium are absent, such as the spent fuel washing and special fire protection requirements.

The disadvantages of lead coolant include its very high density, high melting temperature, toxicity, requirement for corrosion protection additive, high pumping power requirement, lack of practical experience, lack of relevant database, and its activation-related contribution to the (mixed) waste burden.

One of the main problems with lead or lead alloy coolants is compatibility with cladding and structural materials. Sodium, in contrast, is inherently compatible with austenitic stainless steels, requiring no special corrosion protection measures except to keep the impurity level low. For BREST, its Russian designers are adopting the oxide layer corrosion protection approach developed by IPPE for their Pb/Bi-cooled submarine reactor. In this approach, oxygen additive is maintained at certain concentration in the coolant. The steel is a 12 Cr-Si ferritic-martensitic material specially developed for this application. (It is similar in composition to HT9 which is a superior performing steel under irradiation conditions with an extensive US database from EBR-II and FFTF.) The oxygen dissolved in the coolant reacts with the steel forming a Fe, Cr, Si oxide layer which protects the base material from dissolving into the coolant. Importantly, the oxide layer is self-healing when it spalls off the metal surface which is not the case for applied protective coatings. IPPE has developed the technologies to monitor oxygen concentration in the coolant and to increase or decrease it as needed. The concentration must be high enough to quickly reform the oxide layer where it spalls, but not so high as to result in precipitation of slag (PbO) at the minimum temperature of the heat transport circuit. *The status and availability of the material compatibility database (corrosion, liquid metal embrittlement, etc.) is an uncertainty for BREST.*

The approach for the BREST reactor coolant purification system is not addressed in the Russian literature. Sodium systems utilize cold traps for on-line purity control. The approach for the Pb/Bi-cooled submarine reactor appears to have been to allow impurities to precipitate out at the circuit minimum temperature, keep the precipitates in suspension by prescribing coolant flowrate (1-3 m/s), and collecting precipitate/particulate in a filter. However, this is not a satisfactory approach for a commercial NPP where precipitation in the heat transport circuit is to be avoided. For lead and lead alloy coolants, purification is complicated by the need to maintain an oxygen additive concentration. Coolant purification is an uncertainty for BREST.

A key advantage of lead coolant is its inertness with the water/steam working fluid. A steam generator leak or tube rupture can be accommodated in this system without chemical reaction, whereas with sodium coolant there is a violent exothermal reaction with an adiabatic reaction temperature of 1400°C. Hence, the sodium system separates the steam generator from the reactor system by use of an intermediate heat transport system (IHTS). The developers of BREST have taken advantage of the inertness property of lead to eliminate the IHTS and to place the eight helical-coil steam generators (SGs) directly into the primary pool. In doing so, they have addressed the consequences of steam generator tube rupture in the primary system. The main issues are the effects of shock pressure, hydrostatic pressure buildup, behavior of steam bubbles, and dynamic forces of the coolant itself. These issues are exacerbated in BREST by: 1) use of SGs with very high pressure supercritical conditions (~25 MPa), 2) pumped flow which may transport steam bubbles through the core, and 3) (apparently) a positive coolant void coefficient in at least part of the core. The BREST designers limit the reactor vessel pressure buildup by addition of an over-pressure relief system. This system seems extremely generously sized (probably attributable to Chernobyl experience with multiple channel tube failures in the sealed reactor space). Most blowdown steam separates into the cover gas region. The system to prevent over-pressurization consists of four rupture diaphragms leading to four 1200 mm dia vent pipes which exhaust the steam to a huge pressure suppression pool with a 1000m^3 air volume. The design basis appears to be the simultaneous failure of 160 of the 5312 tubes in the eight SGs. *The analysis approach used to dismiss the reactivity consequences of void (bubbles) transported through the core appears implausible and requires attention.*

The heavy density of lead requires significant strengthening of the reactor vessel and coolant containment structures, as well as support members and structures. The heavy primary system weight presents severe seismic design challenges, and has prompted BREST designers to consider abandoning the traditional reactor vessel approach. The high density of lead also presents significantly increased pumping requirements, and necessitates design measures to reduce pumping costs. One example of such a measure is the high coolant volume fraction of the reactor core, which is chosen to increase the coolant flow hydraulic diameter and reduce the coolant flow friction pressure drop through the reactor. The impact of this design choice is to reduce the core power density (degraded nuclear performance) and to increase the core size (increased materials inventory).

The high melting point of the lead coolant (327°C, compared to 97°C for sodium) requires specific design measures to ensure that the minimum coolant working temperature be maintained to avoid freezing and flow reductions or stoppages in normal operation and in anticipated transients. The high melting point also narrows the available working temperature difference across the reactor, which is limited on the high end by structural steel strength characteristics. The reason that BREST utilizes supercritical steam conditions (~25 MPa pressure) is directly related to the high melting temperature of the lead coolant. In contrast, the IPPE SVBR-75 reactor concept, based on their submarine reactor, originally utilized a simplified steam generator with only 4.6 MPa steam pressure, enabled by the low melting point of the lead-bismuth eutectic coolant (123°C). *BREST designers assert that the selection of supercritical steam generator conditions for BREST is based on a desire*

for high plant efficiency (which is true) and on their superior steam generator technology (which is questionable). A likely additional reason is that with the SGs placed directly in the reactor pool, the feedwater temperature must appreciably exceed the reactor coolant freezing temperature to prevent the possibility that a transient reduction in steam circuit temperature (by feedwater heater anomaly, steam line break, etc.) could result in coolant freezing. Such coolant freeze-up could imperil the heat transport circuit. In SVBR-75, this is avoided by the very large margin between the feedwater temperature and coolant freezing temperature (226 - 123 = 103°C); for BREST this margin is only 340 - 327 = 13°C.

It is clear from the literature that the BREST designers are very concerned about coolant freeze-up attributable to numerous potential causes. They have performed analyses of the consequences of such freeze-up which are said to show that cladding, steam generator tubes, and other structures can tolerate such a freeze-up and return to service. (Of course, this assumes that core materials do not melt owing to the blockage of the heat transport path impeding decay heat removal.) However, it is doubtful that there are many countries where the regulator would permit startup after such a freeze-up event without thorough inspection. Moreover, the melting point of lead requires a "cold" shutdown temperature of ~400C; in-service inspection (ISI) may not be possible at such a high temperature.

The high boiling point of lead does contribute additional margin to coolant voiding due to boiling in accident situations. However, creep of steel structural materials becomes significant for coolant temperatures above 1000°C, and core disruption due to creep rupture of support structures could occur if temperatures were allowed to remain high. (Stainless steel melts at 1427°C). This failure mechanism, which becomes significant when temperatures climb only marginally above the sodium boiling point, limits the safety advantage of the high lead boiling temperature.

Like most heavy liquid metals, lead is chemically toxic to humans and requires special handling and utilization procedures. During reactor operation, neutron irradiation of lead produces long-lived activation products, and corrosion products carried with the coolant also become radioactive. These characteristics present requirements for coolant containment during operation to protect plant workers and the public, and for coolant cleaning during decommissioning and prior to disposal to protect the environment. (Sodium coolant also has neutron activation products, but they are not long-lived products requiring long-term "exemption", i.e., withholding of the material from commercial re-use.) The activation of the ^{204}Pb isotope (~1.5% abundant) produces a daughter with a half life of 1.5×10^7 years, and so natural lead requires exemption "practically for good". The activation of ^{208}Pb (~52% abundant) starts a chain that produces the ^{210}Po radiotoxic α-emitter, albeit in far less concentration than in Pb/Bi. Both these hazards may be mitigated by isotopic enrichment to the ^{206}Pb isotope.

3.2 Nitride Fuel

The BREST design makes use of mixed mononitride (U,Pu)N fuel pellets encapsulated in ferritic-martensitic stainless steel cladding and possibly incorporating a liquid lead thermal bond between the fuel and cladding. Russian studies have shown the mixed nitride fuel to be compatible with both the stainless steel cladding and liquid lead (under conditions of tightly controlled, low oxygen concentrations) up to 750°C.

Properties

Uranium and mixed nitrides are generally regarded as attractive fuels for use in fast reactor systems, due both to their inherent thermo-physical properties and their irradiation behavior. First, nitrides are very dense fuels, with the mixed nitride being almost 40% denser than the mixed oxide and about 5% denser than the mixed carbide. The high heavy-atom density makes them attractive for use in compact fast reactors, such as space power systems (the U.S. designed SP-100 space nuclear reactor concept made use of UN fuel) or reactors with high targeted conversion ratios. Second, unlike oxide fuels nitrides are completely compatible with liquid metal fast reactor coolants such as sodium, lithium, or lead as in the case of the BREST concept. Third, nitrides have high thermal conductivity, essentially the same as the U-Pu-Zr metallic alloy fuel used in the Integral Fast Reactor concept, which is almost an order of magnitude greater than the conductivity of oxide fuels. As a result, nitride fuels can operate with very small thermal gradients and low temperatures inside the fuel pellet. Thus, the core stored energy that must be dissipated during accident scenarios is much less than for an oxide fuel core. Furthermore, the compatibility of nitride fuel with liquid metals such as lead allow them to make use of a liquid metal thermal bond between the fuel and cladding, further reducing the fuel operating temperature compared to an oxide fuel that must employ a gas bond; the temperature rise of several hundred degrees between the cladding inner surface and the fuel pellet outer surface typical in gas-bonded fuels is essentially eliminated with the liquid metal bond. And finally, the high melting temperature of over 2800 K for PuN and over 3100K for UN is essentially the same as for oxide fuels and higher than carbide fuels, providing a large thermal margin. The high melting temperature of nitride fuels, combined with their high thermal conductivity and with the use of a liquid metal bond, gives them superior power-to-melt performance characteristics compared to oxide, carbide or metallic fuels.

Fabrication

Fabrication of mixed nitride fuel has been accomplished in several of the various national fast reactor development programs. Initial fabrication (prior to recycle) of this fuel from either oxide or metallic forms of uranium and plutonium is straightforward. Plutonium *oxide* is converted to PuN using a carbo-thermic reduction/nitriding process to convert the oxide to carbide; the carbide is then exposed to a mixture of nitrogen and hydrogen gas which converts the carbide to plutonium mononitride; the process for producing UN is similar. Plutonium or uranium *metal* is converted to the nitride by first hydride-dehydriding the metal to produce a fine metallic powder followed by reacting the metallic powder with nitrogen gas. Once the UN and PuN powders are formed, they are generally mixed, cold-pressed and sintered to form (U,Pu)N pellets. UN and PuN exhibit complete solid solubility.

While the ceramic fuel fabrication processes that must be used to fabricate pellet nitride fuels are established and have been widely used, such a pellet fabrication process has never been implemented in a totally remote, hot cell environment as would be required for the conceptual BREST fuel feed material that retains significant levels of radioactive fission products following reprocessing. Nitride fuel pellets, like most other ceramic fuels, must be sintered at relatively high temperature (>1500 °C) to yield dense pellets. This may prove problematic in retaining volatile actinides in the fuel during fabrication.

Another issue regarding nitride fuel fabrication relates to the neutronic behavior of nitrogen. Naturally occurring nitrogen is 99.6% N-14 and 0.4% N-15. During irradiation N-14 undergoes the an (n,p) reaction to produce gaseous hydrogen and C-14. The production of copious quantities of the biologically hazardous C-14 in the fuel during irradiation leads to safety concerns downstream in the fuel cycle, while the production of hydrogen inside the fuel rod leads to concerns that the cladding may become embrittled and fail catastrophically. Both these concerns are eliminated if the nitride fuel is fabricated using N-15 only; therefore it is desirable to employ nitrogen that is fully enriched to N-15 in the fabrication of nitride fuels. However, if the nitride is to be recycled into the reactor, then the high cost of N-15 would likely warrant the recollection of N-15 from the dissociation of the nitride during recycle. Extraction of N-15 from fission gases, which would be simultaneously released from the fuel adds complexity to the remote recycle scheme.

There is indication that Russian technologists are considering the use of the "vi-pac" fuel form for the BREST concept. Vi-pac fuel is a form that results from an innovative means of fabricating ceramic fuel from powders. Conceptually, fuel powders are collected from powder preparation processes, including in-cell processes for recycled fuel, and poured in to open-ended cladding jackets. The powders are consolidated into the cladding jackets by vibrating the jackets. The vibro-compaction can consolidate fuel powders to around 80% theoretical density, although densities near 95% have been obtained with specially formulated powder mixtures. This fabrication technology has been used for considerable amounts of UO_2 fuel at the BOR-60 reactor in Russia. The advantage of this scheme is that the rigors of pellet fabrication are avoided, which is particularly attractive for remote fuel processing. A concern with such fuel is that particle fragments, under some conditions, can contact the interior walls of the cladding with sufficient force that the axial growth of the packed-powder can stress the cladding in the axial direction.

Irradiation Performance

The irradiation performance database for nitride fuels is significantly more limited than that for oxide, metallic, or even carbide fuels. The most recent fuel performance data produced in the U.S. was that generated by the SP-100 space nuclear power system during the late 1980's and early 1990's. He-bonded UN fuel performed sufficiently well at high temperature (cladding temperatures up to 1500K much higher than would exist in the BREST reactor system) for burnup values up to 6 atom %. The limited data available suggest that UN fuels behave very well under irradiation. Pellet-type nitride fuels combine low swelling behavior (similar to oxides and much less than carbides) with low fission gas release. Data show that fission gas release in dense nitride fuels (~95% of theoretical density) can be kept below 10% even at temperatures much higher than expected in the conceptual BREST reactor. These characteristics serve to minimize cladding stresses caused by fuel-clad mechanical interaction or gas pressure, potentially leading to a long-life fuel element.

However, only a small amount of irradiation performance information is available to indicate how well (U,Pu)N fuel would perform at BREST operating conditions. Nitride performance at the targeted burnup levels (peak burnup > 10%) has not been demonstrated – particularly for (U,Pu)N. Anecdotal information suggests that the (U,Pu)N fuels cracked and fragmented during simple startup and shutdown transients. In fact, the cracking phenomenon was considered the reason for the early fuel failures seen in the U.S. irradiation tests.

The transient performance of nitride fuels, especially at higher burnup levels is largely unknown. One significant concern is the high nitrogen gas pressure that would result from thermal dissociation of (U,Pu)N fuels at elevated temperatures that might be encountered under accident conditions. Moreover, with the large quantity of fission gases retained within nitride pellets during steady-state operation, one will want to demonstrate that it does not release in a sudden and potentially energetic way during off-normal events.

So, until further literature review and investigation can be completed, it is best to consider nitride fuels to have unknown potential.

3.3 Lattice and Core Design

The BREST-300 core is designed to produce 700 MW(thermal) of fission power. It consists of 185 U-Pu nitride fuel assemblies cooled by liquid lead and surrounded by blocks of lead for neutron reflection. Figure 3.3.1 illustrates the planar layout of the core. The core size is approximately the minimum that enables the attainment of a breeding ratio (CBR) slightly exceeding unity while satisfying thermal-hydraulic design constraints and avoiding the use of internal or external blankets. The comparatively high heavy-atom density of the nitride fuel is key to achieving the CBR target and the near-zero burnup reactivity loss, and its high thermal conductivity serves to reduce stored energy and the reactivity effect of power variations. The coolant inlet temperature is 700K, 100K above the melting temperature of lead, and its temperature rise through the core is 120K. The core structural material is 12%-chromium ferritic/martensitic steel.

Fuel assemblies consist of an open (ductless) 11x11 square array of pins. Of the 121 pins in each assembly, 114 are fuel pins and 7 are structural support rods. Three types of fuel assemblies differing in fuel pin diameter are employed in three concentric zones of the core (see Fig. 3.3.1) to flatten the core power and power-to-flow ratio distributions; the outermost zone contains the largest diameter pins and therefore has the highest fuel volume fraction. The total in-core residence time of the fuel assemblies is five or six years, yielding average discharge burnup levels of about 9%, 7%, and 5% of the heavy atoms for fuel assemblies in the inner, middle, and outer core zones, respectively. Refueling is performed on an annual basis with the most highly depleted one-fifth of the fuel assemblies in each zone replaced each year. Key fuel assembly and core design parameters are provided in Table 3.3.1.

Because of the small magnitudes of the burnup reactivity loss and the power coefficient of reactivity, the excess reactivity requirements are *nominally* very small. Reactivity control and shutdown are performed using control assemblies located in a single row of assembly positions outside the core (between the core assemblies and the reflector blocks). Control is accomplished by use of gas pressure to adjust the height of lead columns and to insert neutron-absorbing material (tungsten diboride). A subset of the control rods comprise a "passive/active protection system" that provides for insertion of absorber material either passively when flow is reduced or actively through closure of a valve.

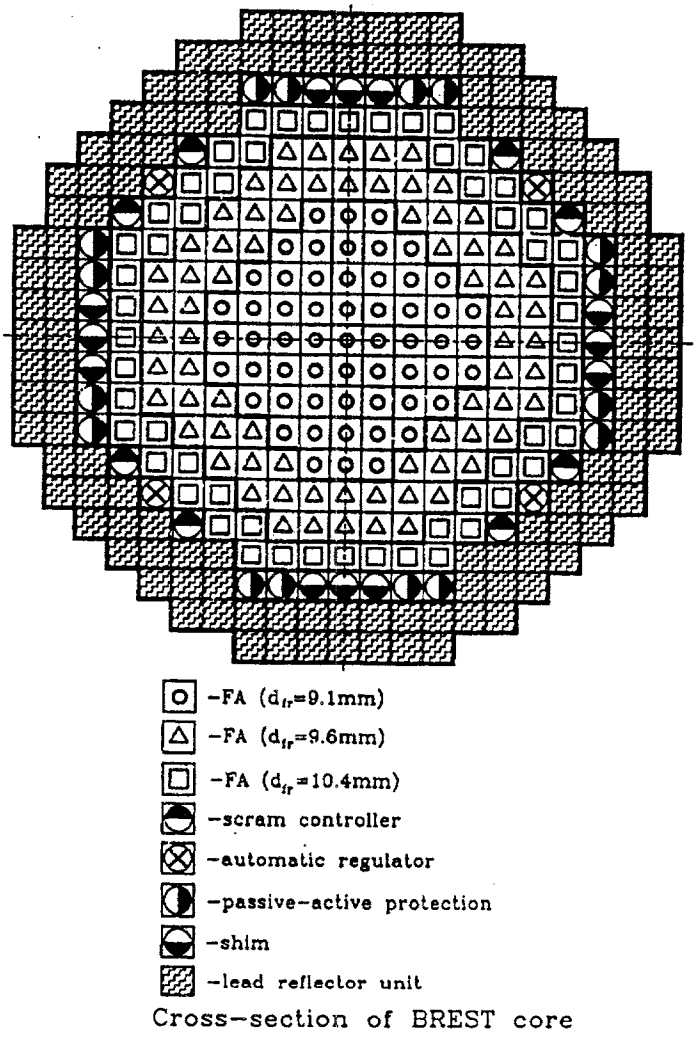

Figure 3.3.1 Cross-Section of the BREST-300 Core

Table 3.3.1
BREST-300 Fuel Assembly and Core Design Parameters

Parameter	Parameter Value		
	Inner Core Zone	Middle Core Zone	Outer Core Zone
Number of fuel assemblies	57	72	56
Number of assemblies refueled annually	11-12	14-15	11-12
Fuel Pin diameter, mm	9.1	9.6	10.4
Fuel pin pitch to diameter ratio:	1.495	1.417	1.308
Volume fractions:			
- fuel (smeared)	0.231	0.264	0.322
- structural materials	0.093	0.097	0.111
- coolant	0.676	0.639	0.567
Breeding ratio:			
- start of cycle	1.06	1.07	1.08
- middle of cycle	1.05	1.06	1.07
- end of cycle	1.04	1.05	1.06
Thermal output, MW			
- start of cycle	229.1	265.9	178.9
- middle of cycle	228.8	265.9	178.2
- end of cycle	228.8	265.9	178.2
Radial power peaking factor	1.09	1.16	1.18
Peak linear power rate, kW/m	42.7	41.3	35.3
Peak fuel rod surface temperature, K:			
- nominal	869	879	887
- "hot spot"	902	915	922
Peak fuel temperature, K:			
- nominal	1087	1085	1063
- "hot spot"	1253	1247	1244
Discharge burnup, % HM:			
- average	9.0	6.9	4.8
- peak	11.8	9.8	6.8
Radiation induced damage of fuel cladding, dpa	130	114	86
Plutonium content*of charged assemblies, % HM:			
- plutonium	14.0	14.0	14.0
- $^{239}Pu + ^{241}Pu$	9.7	9.7	9.7

*Mixed U-Pu mononitride fuel is used with the following isotope fractions:
$^{238}Pu/^{239}Pu/^{240}Pu/^{241}Pu/^{242}Pu/^{241}Am/^{242}Am/^{243}Am$= 0.5/64/28/3.1/1.7/2.1/0.1/0.5

The BREST core design employs several innovative features whose feasibility and performance capabilities have only been partially verified by experiments and analyses. Aside from the evident needs (discussed elsewhere) to demonstrate the nitride fuel and lead coolant technologies, principal uncertainties related to core design and performance include:

Feasibility of designing and operating BREST-300 with an exceedingly small reactivity margin: A major source of system variability that must be accommodated in setting excess reactivity is the evolution and variability of the composition of repeatedly recycled fuel containing multiple actinide and fission product constituents. This variability will likely be exacerbated by the difficulty of controlling the concentration of constituents unintentionally carried over during recycle. Additional sources of reactivity margin uncertainty result from uncertainties in the basic nuclear data, and from errors in characterizing and modeling such phenomena as fuel swelling and subtle displacement due to irradiation and thermal effects on core structural materials.

Accurate characterization of hydraulic and thermal performance: Because fuel assemblies are not ducted, the coolant flow through the core will exhibit a significant component lateral to the main (axially forced) flow direction, particularly in low flow conditions. Accurate characterization of the three-dimensional flow field is thus required for reliable prediction of the distributions of core-material temperatures and local margins to limiting thermal conditions. Such accurate predictions exceed the capabilities of current thermal hydraulic models and their supporting experimental databases.

Accurate characterization of reactivity feedbacks key to passive safety: The structural design of the core is unconventional for a liquid metal cooled reactor in its use of thermal stabilizers of the fuel assembly pitch, hydraulic dampers of seismic loads, and thermal expansion boosters to increase the fuel assembly pitch in the core region (to reduce reactivity through increased leakage) when the core temperature increases. The impact of these features on the thermo-structural response of the core and on reactivity feedback (particularly the dominant radial expansion feedback component) during transients and accident conditions requires thorough assessment and validation.

3.4 Heat Transport System

The essential features of the BREST heat transport systems design concept are depicted in Fig. 3.4.1. A single liquid metal coolant circuit delivers heat from the reactor to the steam generators, which produce supercritical steam at 520°C and 24.5 MPa. Reactor coolant at 420°C enters the core and gains 120°C as it travels upward through the fueled region. Leaving the core, the coolant enters the hot plenum, which discharges through nozzles into the eight steam generator cavities. The hot coolant flows downward through the steam generator over coiled tubes, transferring heat to the counterflowing feedwater initially at 340°C -- 13°C above the lead freezing temperature. Within the steam generator the cold liquid metal flows upward through an annular gap, and discharges into the pump suction plenum. Four pumps lift the coolant 2.5 m to the pump discharge plenum, from which the liquid metal flows into the annular vessel downcomer region and returns to the core inlet. Free surfaces in the pump suction and discharge plena are open to the reactor

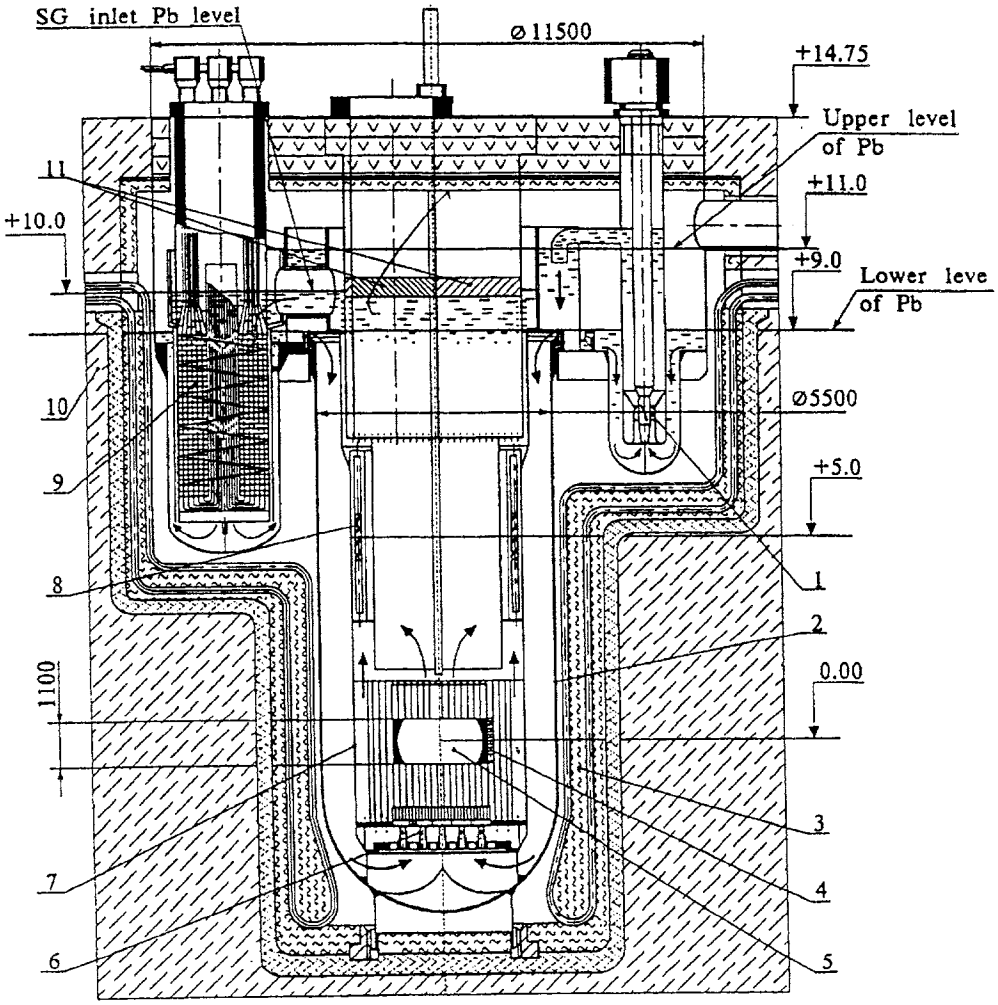

1 — pump
2 — reactor vessel
3 — termal protection
4 — CPS
5 — core
6 — support pillars
7 — dividing barrel with a support grid
8 — in-pile FA storage
9 — steam generator
10 — concrete vault
11 — rotating plugs

Figure 3.4.1 Elevation View of BREST-300

cover gas region, which is connected to a 300 m^3 ex-vessel gas volume. Coolant flow is maintained by the 2.5 m liquid level difference between the pump suction and discharge (~37 psid), with significant natural circulation (15% flow equivalent at normal operating conditions) due to the elevation difference between the thermal centers of the core and the steam generator (~ 6 m). Check valves located between the pump suction and discharge plena provide for a low-power coolant natural circulation path when pumps are not operating. A steam generator bypass carrying ~1.5% of normal flow is provided for shutdown conditions to prevent coolant freezing.

In the BREST-300 conceptual design, reactor coolant flow is approximately 40,000 kg/s. The maximum allowable coolant velocity is 1.8 m/s to assure stability of the protective oxide film on coolant system steel surfaces.

The physical and chemical properties of the heavy liquid metal coolant employed in the BREST concept result in several prominent heat transport system design features. First, the high density increases the pumping power needed to lift the coolant. Second, the maximum coolant velocity of 1.8 m/s is specified to prevent destabilization of the corrosion-inhibiting oxide film maintained on heat transport system steel surfaces. The impact of this specification is to increase hydraulic flow areas, especially in the core, in order to maintain heat transport capability, and to reduce the achievable core power density. Preservation of the oxide surface films requires careful control of oxygen concentration levels in the liquid metal coolant. Understanding of this process and the technology to control it have been developed in Russia, but have not reached the same level of maturity in the USA.

Overall, the BREST heat transport system conceptual design is feasible and would likely function as described, subject to successful implementation of measures to prevent structural steel corrosion by lead. The design features a single liquid metal heat transport circuit, and a system-cost benefit associated with the elimination of the intermediate coolant loop. However, use of the heavy liquid metal also incurs thermal-hydraulics performance compromises (e.g., reduced core power density in comparison to sodium cooled systems) that negatively impact cost but may, at the same time, enhance passive safety performance.

3.5 Reactor Structure and Refueling

Figure 3.4.1 shows an elevation view of the BREST-300 conceptual design, and Fig 3.5.1 shows a plan view. All of the primary coolant is contained in a multi-chambered steel reactor vessel with a diameter of 11.5 m at the top and 5.5 m below the level at which coolant flows to and from the eight steam generator chambers and four pump suction chambers. The upper portion of the reactor vessel is 3 cm thick, and the lower portion is 7 cm thick. The vessel is 19 m tall, weighs 880,000 kg, and holds 600 m^3 of lead (about 6,000,000 kg). The total weight of the reactor and coolant is 8,000,000 kg.

The reactor vessel is located within a cylindrical reinforced concrete vault. The vault is lined with steel, insulated from reactor vessel heat, and cooled by air circulated through tubes on the vault wall. The gap between the vessel and the vault wall is sized to assure sufficient coolant coverage and to maintain flow paths in the event of vessel failure. The vault serves as the backup vessel.

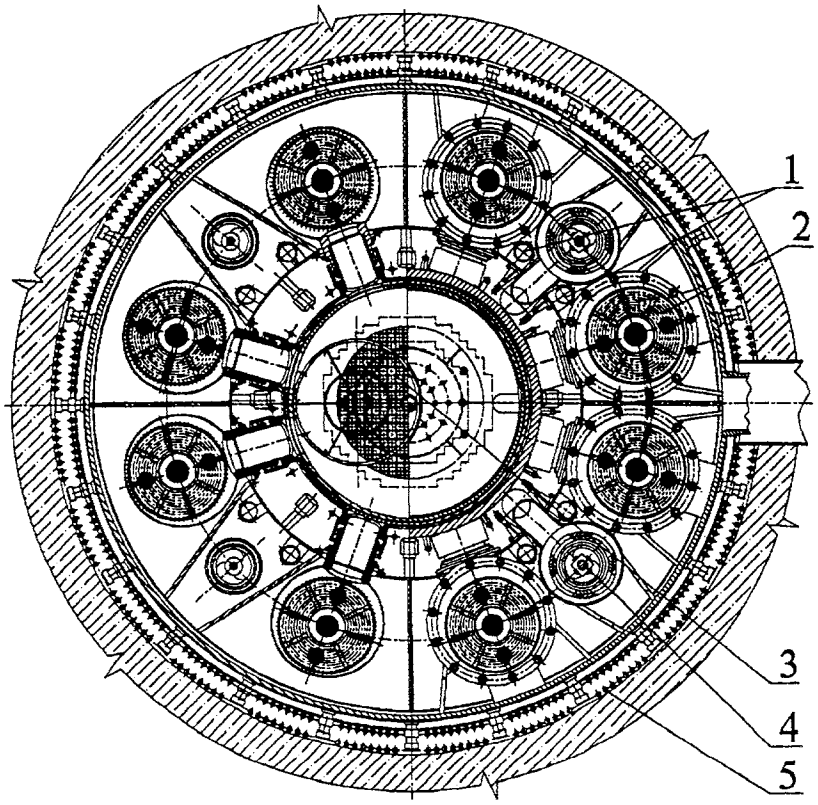

1. charging valve
2. steam generator
3. FA
4. pump
5. pipes of heat removal air system

Figure 3.5.1 Plan View of the BREST-300 Reactor

The vessel is supported by 24 roller bearings located at two diameters encompassing the steam generator chambers. Each bearing is designed to carry 500,000 kg. A stem section at the bottom of the vessel maintains alignment within the vault. Seismic loads are transmitted through the roller bearings and alignment stem.

The reactor core is supported by a grid structure located in the lower part of the core barrel that separates the hot and cold coolant legs. Spent fuel is positioned for cooling on the inside of the core barrel wall above the reactor core.

The forty available spent fuel storage locations also serve as a reloading station for fuel, control, and reflector subassemblies. Refueling is performed annually, and the fuel life is five years. Twin rotating plugs are provided for refueling. In-vessel transfers between the spent fuel/reloading locations and the core are performed with a machine mounted on the inner rotating plug. Transfers of fresh fuel to the reloading station and of spent fuel out of the reactor are performed with a machine mounted on the outer rotating plug. In the BREST-300 concept, the in-vessel fuel handling machine features a guiding tube that attaches to and deflects fuel assemblies adjacent to the assembly to be loaded or unloaded. This guiding tube provides lateral support during assembly insertion and removal (and enables insertion of assemblies in the high-density coolant). In the BREST-1200 concept, the plug-mounted ex-vessel machine is replaced with an A-frame machine that transfers fuel assemblies to the in-vessel refueling station through a port on the side of the reactor structure.

A variant of the BREST-300 design is shown in Fig. 3.5.2. This variation, called the "pool-type" configuration in the literature, features an engineered coolant boundary consisting of a concrete vault clad with insulating plates. Cooling tubes carrying air are embedded in the high-temperature concrete layer next to the liner to maintain concrete temperatures at acceptable levels. One concept for this concrete cooling system is shown in Fig. 3.5.3.

Figure 3.5.4 shows another variant of the BREST-300 primary system layout for the concrete silo concept, in which separate silos are employed for each steam generator and coolant pump. This multiple silo layout has also been employed in the conceptualization of a 1200 MWe design.

The physical and chemical properties of the heavy liquid metal coolant employed in the BREST concept result in several prominent structural design features. First, the high density presents challenges in designing for protection against the effects of seismic events. Support and stabilization of coolant-containing pipes and plena become more challenging and costly as their wall thickness requirements and weight increase. These considerations appear to be the motivating factors behind the proposals for the BREST reactor designs that do not have hanging vessels. It may be likely that the design with a hanging vessel is suitable only for the smaller reactor sizes, and that weight and seismic requirements would prohibit utilization of free hanging vessels of larger size. Second, the high corrosion characteristics of molten lead and the high operating temperature range required to prevent coolant freezing both contribute to the need for high-performance steels in the primary heat transport system. Utilization of such high performance materials generally require more costly fabrication techniques compared to conventional steels, in addition to their higher commodity cost. The reactor vessel operates at a temperature (400C) that is low enough for use of ordinary austenitic steel.

The feasibility of the BREST reactor structure and refueling system conceptual design is thus subject to successful implementation of measures to prevent structural steel corrosion by lead. The primary system concepts presented include both a conventional vessel configuration and a novel lined-concrete vault

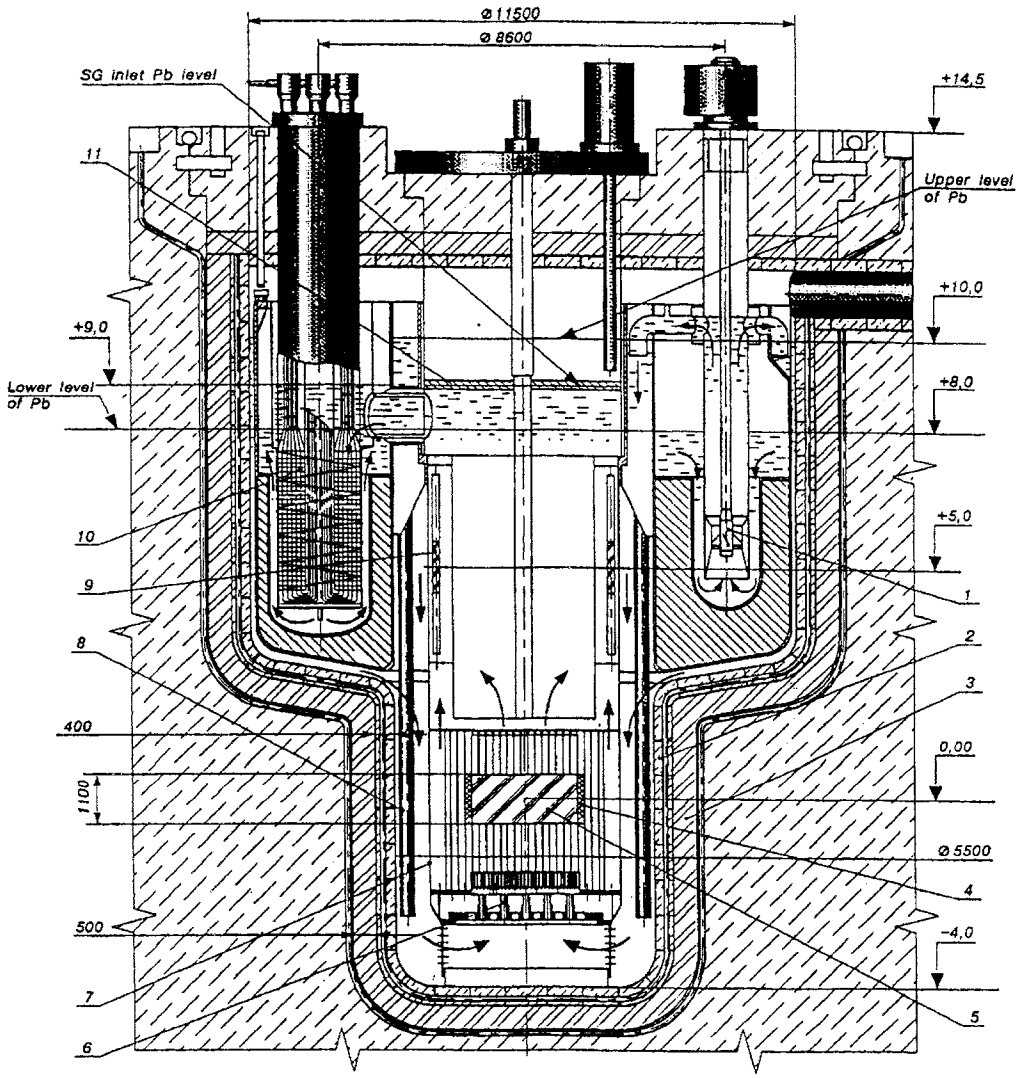

1 — pump
2 — high-temperature concrete
3 — thermal insulation concrete
4 — CPS
5 — core
6 — support pillars
7 — dividing shell
8 — air-cooled channle with fission products
9 — spent FA storage
10 — steam generator
11 — rotating plug

Figure 3.5.2 Pool-Type Variant of the BREST-300 Reactor Configuration

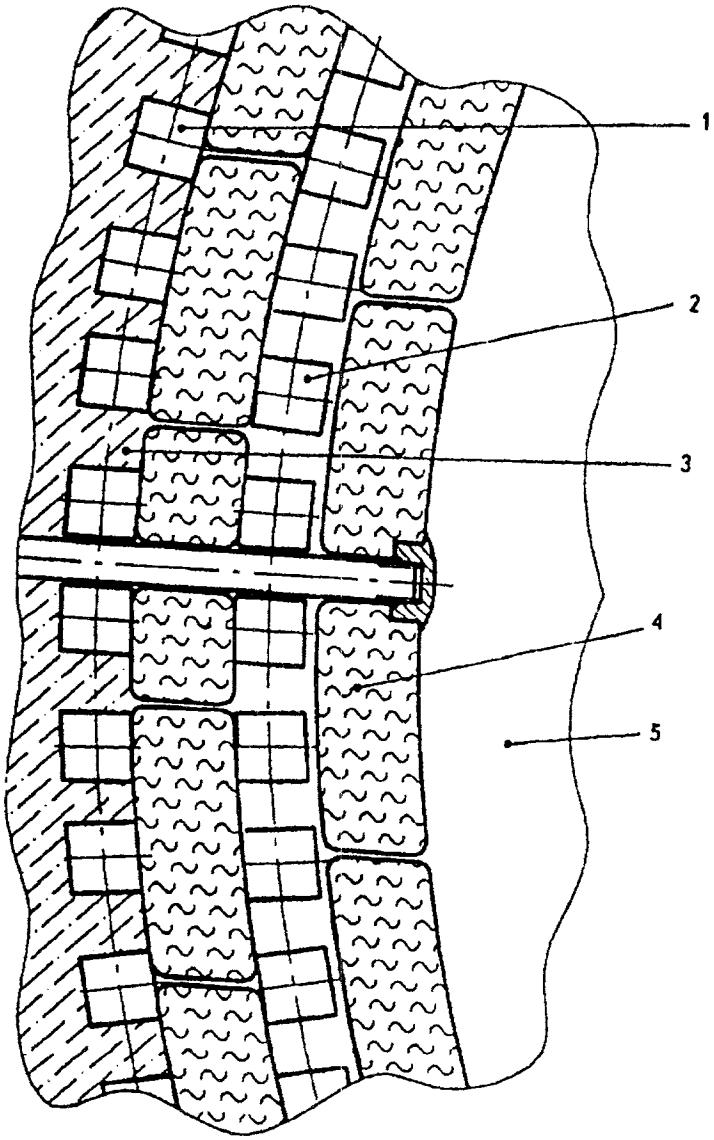

Figure 3.5.3 Concrete Cooling System in the BREST-1200 Reactor: (1) Air Feed Pipe; (2) Air Bleed Pipe; (3) Concrete; (4) thermal Insulation; and (5) lead

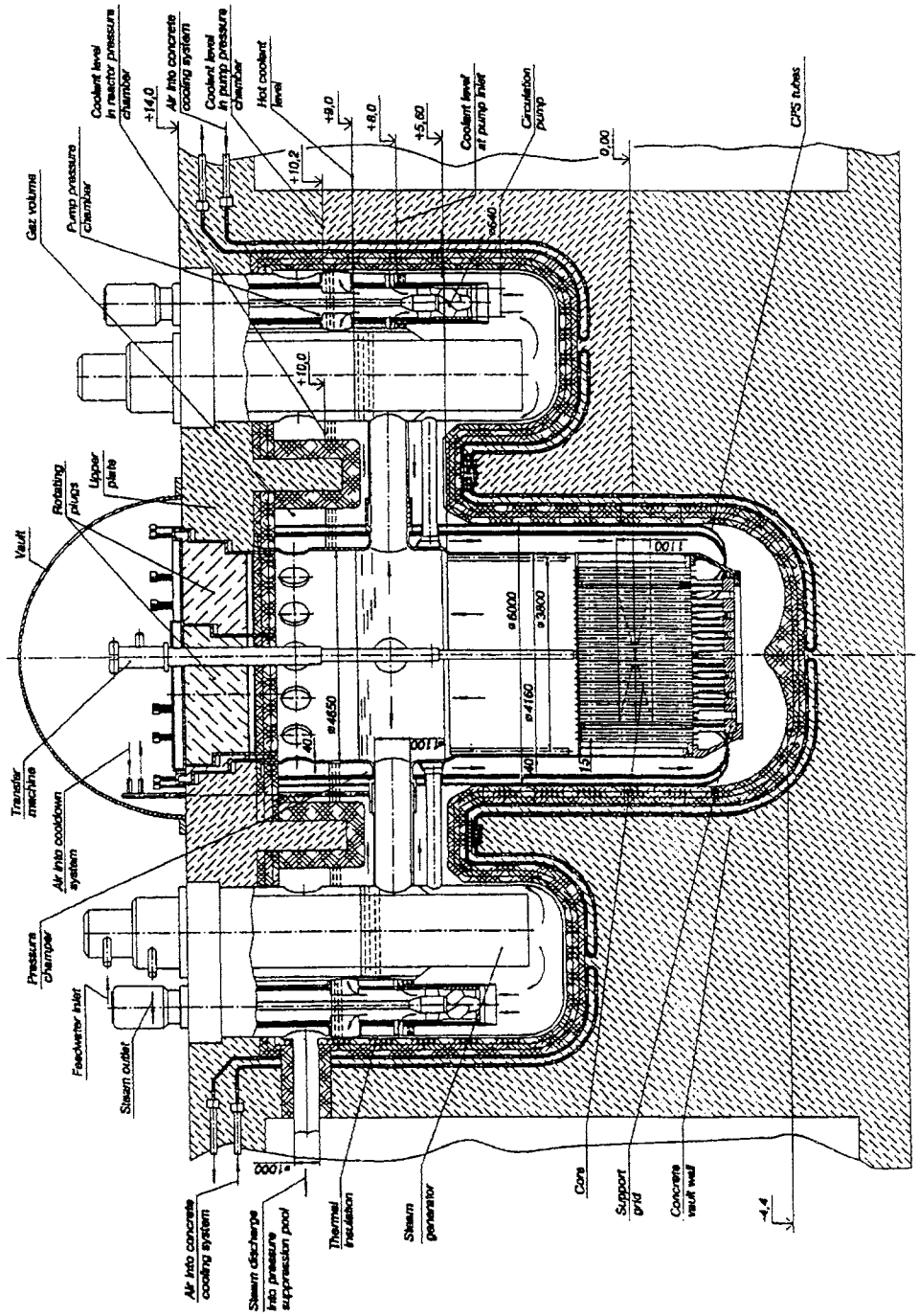

Figure 3.5.4 Multiple-Silo Variant of BREST-300

configuration. The heavy weight of the coolant presents seismic design challenges.

3.6 Containment and Decay Heat Removal

The BREST conceptual design does not provide for a Western-style reactor containment, consistent with prior Russian liquid metal cooled reactor design practice.

In the USA, liquid metal cooled reactors have been licensed and built with containment systems that are functionally in keeping with the design guidelines set forth for light water reactors (LWRs) in 10CFR50, Appendix A. The Experimental Breeder Reactor II (EBR-II) and the Fast Flux Test Facility (FFTF) reactor were built with steel pressure containments, and the Clinch River Breeder Reactor Plant (CRBRP) containment design was certified with an NRC construction permit. More recently, the PRISM ALMR design was reviewed by NRC. The PRISM containment design featured a low pressure/low volume controlled-leakage barrier composed of a containment vessel surrounding the reactor vessel and a low-leakage containment dome above the reactor vessel head. This design departed from the conventional LWR containment design guidelines with respect to performance and capabilities, on the basis that inherent safety mechanisms rendered mute certain traditional safety concerns regarding primary system breaks and subsequent public risk. For the PRISM design, the NRC raised a number of general safety questions, and indicated that the design was insufficiently mature to determine whether the proposed design met the conventional safety goals. The same safety questions would be raised for the BREST conceptual design, with the difference that the coolant would not rapidly oxidize as would the PRISM sodium coolant in the event of a spill, and the containment loading mechanism would not be the same.

Based on U.S. design practices and licensing experience, it may be necessary to add a containment system to the BREST concept.

In normal and emergency shutdown conditions, decay heat is removed through two cooldown systems. In the first system, steam from a steam generator is condensed in a heat exchanger by service cooling water until decay heat falls to a level at which heat can be rejected through an steam-to-air heat exchanger and stack to the atmosphere. The air heat exchanger/stack system is capable of removing 14 MW (2% of 700 MW) and is designed to activate automatically. The second system is the reactor vessel air cooling system, in which heat radiates from the vessel surface to the tubes on the vault liner surface carrying atmospheric air to a stack. For a vessel wall temperature of 447°C, the reactor vessel air cooling system is predicted to remove 3.5 MW.

In US design practice, the decay heat removal system must satisfy the single failure criterion and be designed and built as a safety system. The PRISM conceptual design included three independent residual heat removal systems: steam from the steam generator to the condenser, natural circulation air cooling of the steam generator external surface, and passive reactor vessel air cooling (RVACS). In the PRISM concept, the RVACS system was the designated safety system, designed for all applicable capacity, seismic, testability, inspectability, and instrumentation requirements. The NRC concluded that the three PRISM residual heat removal systems appeared to meet both performance and safety requirements. It appears that the BREST-300 decay heat removal system, with the addition of a third active (but not necessarily safety-grade) heat transfer path, would also meet safety goals. Air in the BREST-300 vessel cooling system circulates through tubing, while that in PRISM circulated through open channels and ducts. The performance of the BREST-300 design would require verification, and the scenarios for tube plugging would require analysis for safety qualification.

Based on U.S. design practices and licensing experience, it would be necessary to add a third residual heat removal system to the BREST concept. The third system must be functionally independent of the two already specified. Either the vessel air cooling system or the added system must be safety grade.

3.7 Inspectability/Repairability

Although the BREST conceptual design is insufficiently mature to address inspectability and repairability issues in detail, it is clear that these issues have been addressed with regard to replacement of steam generators, coolant pumps, reactor fuel subassemblies, and control subassemblies. Provisions have been made for penetrations through the upper reactor deck that permit access, removal, and replacement of such components.

In US design practice, industry and regulatory design guidelines have evolved that set requirements for key safety-related systems, including protection and reactivity control systems, the reactor coolant pressure boundary, residual heat removal systems, electrical power systems, the containment pressure boundary, containment heat removal systems, containment atmosphere cleanup systems, and cooling water systems. Each of these systems is required to be designed so that they may be routinely tested for operability and functional performance. Coolant boundaries must be designed to be inspectable for structural integrity and leak tightness. Coolant vessels must undergo material surveillance. Based on experience gained in the design and licensing of FFTF, CRBRP, and PRISM, it is judged that BREST conceptual design will require considerable adjustment and modification to comply with accepted US design practices. In addition to the absence of containment, the pool-type design featuring an insulated concrete coolant boundary presents a considerable divergence from accepted policy regarding coolant boundary surveillance, testing, and inspection. This design feature is apparently adopted to remedy the seismic vulnerabilities of a tall, free-hanging vessel filled with heavy liquid metal coolant. However, in this case, a design feature adopted for one safety performance requirement violates yet another.

3.8 Safety Performance

The choice of lead as coolant in the BREST-300 conceptual design is based in part on its safety performance. Lead does not react energetically with water or air as does sodium, and its relatively high boiling point (about 1740°C at normal pressure) provides additional margin to voiding compared to sodium (about 880°C at normal pressure). The relatively benign chemical interaction of lead with water is cited as the basis for elimination of a second liquid metal coolant loop.

The designers of BREST-300 argue that their concept has "natural" safety characteristics including a low-pressure, non-flammable, high boiling point coolant, and a reactor core that performs without large reactivity inventories for burnup compensation. These "natural" safety characteristics are argued to permit the elimination of "engineered features and barriers" that complicate the design, add to cost, and require significant measures for assurance of reliability. "Passive" protection and mitigation, especially for reactivity feedback and coolant hydraulics, are emphasized for public risk reduction, and active protection systems are designed for maintaining plant operability and preventing damage to plant structures and components. The BREST designers state that their concept will comply with routine design basis accident requirements, and go further to state that progression into severe accidents with serious radiological consequences is prevented in their "naturally safe" concept.

Analysis results for a number of nominal severe accident sequences are presented that indicate the absence of radiological release. Initiators include unprotected loss-of-flow (ULOF), unprotected transient overpower (UTOP), unprotected loss-of-heat-sink (ULOHS), and coolant overcooling.

Analyses have also been performed for a series of scenarios that presume primary system failure for margin demonstration. These include vessel rupture, sabotage with explosive charges causing core compression, steam generator tube ruptures, and coolant radioactivity dispersal from an open reactor system.

A series of lead freezing (at about 327°C) scenarios were assessed to help identify design measures to prevent coolant freezing and to reduce the consequences of coolant solidification.

Finally, studies of hypothetical core disruptive accidents (HCDA) were performed to characterize bounding consequences.

The BREST-300 designers conclude that their concept has high potential for much reduced accident consequences compared to current designs. This improved safety performance is stated to be due to the characteristics of the lead coolant and nitride fuel.

Assessment of the published BREST-300 safety performance characteristics from the US safety and licensing perspective first prompts recognition of the aggressive reliance on so-called "passive" mechanisms to provide safety margins to justify elimination of engineered safety systems. Passive safety mechanisms such as inherent reactivity feedbacks and natural circulation of coolant have been employed in US designs. However, in the BREST lexicon, passive safety credit is also taken for operation of engineered mechanisms that do not require operator action, such as the check valves between the coolant pump suction and discharge plena that must open to allow a natural circulation path. In US safety analyses, the check valves would likely be considered as an active design element with an associated failure probability. In the BREST analyses, the thermal expansion boosters built into the core subassembly positioning system are engineered devices, but their effect in the unprotected accident sequences is cited for passive protection. Operation of a "passive" decay heat removal system relies upon automatic realignment of valves to route high pressure steam and water to a heat exchanger within an exhaust air stack. Assumed failure of such engineered, non-safety grade devices would have the effect of increasing the severity of consequences of the assumed accident initiators, and possibly changing benign sequences into core disruptive sequences.

Of particular interest for concept feasibility is the stability of the oxide film maintained on steel surfaces in the coolant system by control of oxygen concentration. Oxide film stability in normal operation, in design basis accidents, and in beyond design basis accidents is required for the safety performance attributed to BREST-300. Technical issues for safety assessment include the impact of PbO precipitation, dissolution, or film disruption on coolant viscosity and fluid dynamics, flow area constriction or enlargement, and structural failures by corrosion. It is possible, perhaps likely, that understanding of lead corrosion of steel and the technology for its inhibition is well understood and developed in Russia but left undocumented to preserve commercial potential. If, however, full understanding of the chemical and mechanical dynamics of oxide film performance is lacking, the safety assessment should account for uncertainties and identify design vulnerabilities. Design features and safety margins should accommodate and compensate for uncertainties in corrosion inhibition technology.

A notable omission in the BREST-300 concept presentation is the unaddressed issue of nitride fuel safety performance. Within the nuclear community outside of Russia, the state of development of nitride fuels is

relatively immature. Irradiations of prototypic fuel elements are few, and failure rates and data from available tests indicate the need for improved understanding of nitride fuel performance in both normal operation and accidents. The currently-available nitride fuel performance database is insufficient to support exclusion of nitride fuel performance issues from safety assessment. Rather, current experience with nitride fuels indicates the need for considerable development and irradiation testing. It is possible that such development and testing has been performed in Russia but left undocumented. If so, the results of such work must be brought forward and become a part of the BREST-300 safety assessment.

3.9 Cost-Reduction Strategy/Rationale

The stated strategy for cost reduction in the BREST reactor concept is to employ the "natural safety" characteristics (mostly due to coolant and fuel properties) to simplify the design, to reduce the amount of equipment required, to reduce the requirements on equipment performance, and to reduce the number of construction and operating personnel. The design simplifications, compared to traditional liquid metal reactor designs, include the reactor and steam generator design, the main and emergency cooling systems (the intermediate loop is eliminated), the refueling system (no sodium washing required), the control system (small reactivity margin requirements, slow response), construction scope, and fire-proofing (no sodium fires). The stated cost reduction goal is to be competitive with or improve on LWR costs.

It is clear that the cost reduction strategy for the BREST design hinges on the potential for elimination of safety-related systems. The containment system is eliminated, as is the intermediate coolant loop. Decay heat rejection diversity and redundancy is reduced, and reactivity control system performance requirements are relaxed. Whether this strategy can actually achieve the stated cost reduction goal remains to be determined by detailed design and cost analysis. Whether this strategy can actually be implemented will depend on the concurrence of regulatory officials.

As regards cost competitiveness, the BREST-300 vessel is of particular concern. The vessel is very complex, being divided into upper and lower sections that require extensive heavy section fabrication and welding. Moreover, owing to the very large diameter of the upper vessel (11.5 m), it is questionable whether the vessel can be factory fabricated and shipped as an integral assembly to the site (including some overland transport). Furthermore, it does not seem to lend itself to the goal of rapid assembly of modules at the site. The vessel seems to introduce excessive complexity and cost for a system of only 700 MWt size.

The stated cost reduction target of improving on LWR costs may not be relevant depending on the site-dependent energy supply infrastructure. At the present time in the US, new electrical power generation must be cost competitive with natural gas turbine/combined cycle units. In markets lacking indigenous resources of hydrocarbon fuels, LWR's and other types of nuclear power plants may be economically competitive or strategically preferred for reasons related to energy security.

4.0 ASSESSMENT OF THE BREST FUEL CYCLE

4.1 BREST Fuel Cycle Features

The basic rationale for the BREST fuel cycle concept and their relation to the BREST reactor design have been described in Section 2.2. The features of the BREST reactor design that most impact the fuel cycle include its nitride fuel, its operation with a core conversion (or breeding) ratio only slightly in excess of unity, and the absence of breeding blankets. It is intended to be self-sufficient on plutonium, all bred in the core from U-238, giving rise to exclusive occurrence of plutonium of "reactor grade" (i.e., Pu-240 content of some 25% or so) or worse. A main objective of the BREST fuel cycle is that uranium and plutonium should always go together "in a certain ratio", and that the inseparability should rely on the chemical process and equipment, and should be insensitive to perturbation: *"Any potential variations in process parameters-temperature, pressure, agents used, etc.- should not entail Pu extraction or result in significant increase of Pu content in the fuel composition, i.e. the reprocessing technology should be inherently resistant to proliferation."*

Specific fuel cycle process requirements include, on a per-cycle basis:

- Actinide carryover to waste < 0.1%
- Fission products returned in fuel 1-10%
- Sr and Cs extraction from waste 95-99%
- I and Tc extraction from waste 90-99%

Further "desirable" features of the process include extraction of 90-99% of the neptunium and curium. The neptunium would be sent to the high-level waste, and the curium would be stored for 50-70 years, after which much of it would have decayed to plutonium, whereupon it would be returned to the reactors.

In many ways the rationale and design objectives for the BREST fuel cycle are similar to those that motivated the U.S. Integral Fast Reactor (IFR) program in 1984-94. These objectives are uniquely achievable with the high-energy neutron spectrum of fast reactors, either sodium-cooled or lead-cooled, allowing the recycle of fuel which has been only roughly cleaned of fission products. For use in fast spectrum reactors, the high-purity separations of the PUREX process are both unnecessary (for reactor performance) and undesirable (in a proliferation-resistance context). This opens the possibility of using a simplified, compact, less expensive fuel cycle.

"Dry" (i.e., non-aqueous) reprocessing technologies of various kinds have been proposed, as has a simplified aqueous process, for consideration in the BREST concept . The dry technologies are typically batch processes, as opposed to continuous, and are geared, for criticality safety and other reasons, to process lines of relatively small throughput compared to a PUREX plant. The large and well-known economies of scale that are attendant to the PUREX process, generally appear to be smaller with the dry technologies. It, therefore, becomes possible to deploy fuel cycle facilities as the reactors are deployed and on the reactor sites, overcoming a barrier to initial deployment (if it takes large fuel cycle plants to be economic, how are fuel cycle services affordably provided for the first reactors?), and at the same time reducing or eliminating transportation of nuclear fuel materials.

Rough cleaning of fission products implies that the fuel material is sufficiently radioactive at all points in the fuel cycle that all operations must be carried out remotely, in heavily shielded hot cells. This presents a large barrier to outright theft, but more importantly with regard to a national proliferation decision, this material is relatively inaccessible and would require additional processing before it would be useful in a weapons program.

More importantly, the dry processes usually imply some degree of difficulty in separating uranium, plutonium, and the minor actinides (e.g., neptunium, americium, and curium) via perturbations of the process and/or equipment. Depending on the specific process, such separations can be made very difficult to achieve, and the difficulty is rooted in fundamental physical or chemical properties of the materials, such as free energies of formation, or chemical potentials.

Russian papers from 1997 to 1999 cite the five following recycle technologies as candidates for use in the BREST fuel cycle:

- Aqueous extraction (PUREX, modified "to suit the nonproliferation requirements")
- Fluoride Volatility
- LiCl/KCl molten salt electrorefining
- Metallurgical refining
- Annealing.

Aside from describing these technology options for recycle and outlining overall fuel cycle goals and approaches (summarized in Section 2.2), Russian papers provide limited information about the fuel cycle design, e.g., specific process steps employed for fuel refabrication, waste treatment, waste form production, etc.

4.2 Proliferation-Resistance Features of the BREST Fuel Cycle

With the information currently available, one can make only general and tentative observations about the proliferation-resistance characteristics of BREST fuel cycles. To the extent that the design expectations for the BREST fuel cycle are similar to those from the U.S. IFR program and the subsequent EBR-II Spent Fuel Treatment program (1994- present), the observations can be relatively more detailed. However, proliferation-resistance is difficult to assess absent specific process choices and design details. Although information deficiencies are large with the current understanding of the BREST fuel cycle on the basis of descriptions found in the literature, a preliminary evaluation of the candidate recycle technologies is provided in Section 4.2.1.

The preliminary evaluation of BREST proliferation-resistance characteristics will proceed in two parts. Firstly, attention will be focused on *intrinsic* proliferation-resistance characteristics of the BREST fuel cycle. These are innate or inherent proliferation-related features of a nuclear reactor and fuel cycle system that raise the barriers to covert or overt diversion of material, or its suitability for use, and which are relatively difficult to subvert or alter. The discussion will be based in part on the claims made by the developers BREST. The claims will be critiqued as appropriate to our current knowledge.

Secondly, while the intrinsic proliferation-resistance characteristics potentially reduce institutional and active safeguarding requirements, the traditional safeguards norms of containment and surveillance (C/S) and material control and accountancy (MC&A) must continue to be relied upon, for any nuclear fuel cycle, to provide independent timely information and assurance to the international community. Here too the U.S. experience in the IFR and spent fuel treatment follow-on, specifically the operations and MC&A program in the Fuel Conditioning Facility (FCF) bears rather directly on the assessment of the dry processing options for BREST.

4.2.1. Intrinsic Proliferation Resistance

Reactor Operation

A fast reactor core operated without a blanket at a core breeding ratio slightly in excess of unity (as in the BREST design) does preclude production of weapons-grade plutonium *as long as the reactor is operated in its intended mode*. Weapons-grade material can always be made, of course, in any nuclear reactor by loading "targets" of U-238 and then removing them at suitably low fluence, but such actions are generally thought to be detectable within the safeguards regime and generally long times are required to generate useful quantities of weapons-grade material.

The Russian position is that the BREST core would be precisely self-sufficient and that this fact, together with on-load refueling at reduced power (proposed for BREST-1200), there is no need for storage of fresh or spent fuel. The proliferation resistance benefit of this approach seems questionable, however, because it requires nearly continuous access to fuel assemblies in the core. Moreover, as a practical matter storage may be reduced but it will never be eliminated, and the benefit of such reduction is limited because fresh and spent fuel both are in the safeguards domain of item accountability, and it is standard practice to keep track of such items as an impediment to diversion.

Also related to a core characteristic of a breeding ratio near unity, is a claimed benefit from a small reactivity margin (stemming from a reduced or even zero burnup reactivity swing) in the reactor burn-cycle. This small reactivity margin, combined with the lack of ex-core irradiation position (the BREST active core is surrounded by solid blocks of lead reflector), is argued to eliminate the possibility of illicitly loading low-reactivity natural or depleted uranium target materials not subject to material accounting in order to generate plutonium rich in Pu-239. This claim seems too strong because the targeted near-zero reactivity margin may not be achievable in practice, and because the insertion of Pu-producing targets cannot be precluded entirely. For example, enriched uranium assemblies could be irradiated in core assembly locations, and depleted uranium can likely be irradiated in control locations or other ex-core positions.

In summary, even though the arguments presented are less than compelling, the fact is that traditional safeguards monitoring can be expected to provide significant barriers to use of BREST (or any civilian power reactor) for covert production and diversion of weapons usable material.

Fuel Cycle Facilities

Co-location of reactors and their individual fuel cycle plants does reduce off-site transportation of fissile materials, and could essentially eliminate it in the BREST system if the fissile self-sufficient core is attained. The tradeoff from a non-proliferation perspective is reduced threat of theft, primarily a sub-national threat (and perhaps more of a national security issue than one of non-proliferation), versus more numerous fuel cycle plants in lieu of fewer larger ones, and with the individual plants operated mainly independently one from the other. The manpower costs of international inspectors is an important issue in evaluating this trade-off.

Process Options

An evaluation of the proliferation-resistance attributes of the BREST recycle-process options is provided below based on currently available information. Consideration is given not only to the processes operated in their intended mode, but also especially to how difficult it would be to alter process conditions to gain a more purified product. Common to all processes is a planned extraction of neptunium and curium from spent fuel for separate management, presumably to facilitate fuel re-fabrication. *This approach appears to be directly at odds with the objective of process-inherent co-extraction of uranium and plutonium.*

a) Aqueous Extraction (i.e., modified PUREX)

The PUREX process was designed to separate high purity plutonium and is, therefore, not an intrinsically proliferation-resistant technology. Russian researchers have suggested several modifications to the configuration and operation of PUREX so that the separation of a high purity plutonium product cannot be achieved. Similar claims were made in the U.S. two decades ago for the CIVEX process and, more recently, in the ATW program. CIVEX was greeted with skepticism in the U.S. non-proliferation community, from the perspective that the process appeared to be rather easily changeable back toward PUREX, and further that the main facility provisions of PUREX were provided in CIVEX. This implied that the barriers to an overt conversion back to PUREX would not be large. The chemistry of the modified PUREX process does not impose an intrinsic barrier to the separation of high purity plutonium. At minimum, the use of a modified PUREX separation process for nitride fuel would place a heavy burden on safeguards to ensure that there is no diversion of fissile material.

As to technological status, the global experience with aqueous separations facilities clearly demonstrates that this type of process can meet the necessary actinide recovery and throughput targets. Much longer post-irradiation cooling times than presently assumed for BREST are likely needed before treatment in order to avoid radiolysis of the solvents used in the process. Additionally, a modification to the head-end of the process would be necessary if recovery of ^{15}N becomes an important goal of the process. The new head-end step would likely involve converting the nitride to an oxide, trapping the gaseous ammonia that is evolved, and recovery of ^{15}N from the trapped ammonia, thereby adding an additional complexity to an already complex but effective process.

b) Fluoride Volatility

As with the PUREX process, Russian researchers have suggested modifications to the configuration of equipment and operating conditions of the fluoride volatility process to prevent the recovery of high purity plutonium. However, because these modifications can likely be reversed and the resulting process used to separate a high purity plutonium product, the modified fluoride volatility process does not appear to be intrinsically proliferation-resistant.

Past U.S. experience with the fluoride volatility process indicates that, like the PUREX process, fluoride volatility separations of actinides is potentially a high throughput process. In addition to the potential for recovery of high purity plutonium, the U.S. experience with this type of process has been that there are some challenging materials problems that would be difficult to overcome. Preventing or minimizing corrosion of process equipment has been the most persistent challenge that must be overcome for this to be a viable process.

c) LiCl/KCl Molten-Salt Electrorefining

Past U.S. experience with electrometallurgical treatment indicates that this technology intrinsically cannot produce a high purity plutonium product and therefore has a relatively high degree of proliferation-resistance. The electrometallurgical treatment flowsheet proposed for BREST seems based on the treatment process developed in the U.S. for the treatment of spent EBR-II metallic-alloy fuel. Most aspects of this type of process have been demonstrated or will soon be demonstrated by ANL on the pilot scale with actual spent fuel. As was stated above, it has been demonstrated that this type of process does not permit the recovery of high purity plutonium. In fact, the process can be operated in a mode in which uranium, plutonium, and all the minor actinides (including Np and Cm) are collected together in a cadmium cathode. Unlike aqueous processes, electrometallurgical treatment can handle short-cooled fuel and because the process is operated in a sealed, inert facility, there are several possibilities for recovery of ^{15}N.

Electrometallurgical treatment requires an electrically conductive feed material, typically metal fuel. Uranium and plutonium nitrides are electrically conductive and therefore amenable to electrorefining, the key step in the process. Electrorefining of actinide nitride feed material has been demonstrated by investigators in Japan and at ANL.

A *molten-salt extraction* type process is also discussed in Russian papers. The basic redox chemistry involved in this process is quite similar to that in the electrometallurgical treatment option and therefore is likewise highly proliferation resistant. The key difference is that anodic dissolution of the spent fuel and reduction of U, Pu and the minor actinides is achieved in two separate steps by adding a chemical oxidant and then a chemical reductant. The use of chemical oxidants and reductants can add significantly to the waste volumes unless these chemicals are recovered and recycled. This requires additional process steps and adds complexity to the process. This process has not been demonstrated on a large scale in the U.S.

The UO_2 *electrowinning* technology developed at Dimitrovgrad is another potential candidate for treating nitride fuel. However, this process is seldom referred to in the BREST-related literature. This may be because the process recovers UO_2 separately from PuO_2 and therefore is unlikely to be inherently proliferation resistant. Our limited knowledge of the process makes difficult an evaluation of the possibilities for modifying the process to improve its proliferation resistance.

d) Metallurgical Refining

In the initial step of this process, the irradiated nitride fuel is ground to a particle size <500 μm in a batch milling step. The fine nitride is then suspended in liquid gallium and heated up to 1400°C to drive off the fission gasses as well as the volatile fission products such as Cs, Rb, I, and Te. Most of the remaining non-volatilized fission products are expected to dissolve in the molten gallium phase leaving only U, Pu, Zr, Mo, Tc, and Ru as undissolved nitrides suspended in the gallium. The gallium solution/suspension is then contacted with molten lead for the purpose of extracting the undissolved nitrides. Gallium and lead are immiscible thereby making it possible to freeze the lead, pour off the liquid gallium, re-melt the lead, and recover the U, Pu, Zr, Mo, Tc, and Ru nitrides by centrifugation. This process is essentially a series of extractions using molten metals. Its technology base is minuscule with little experimental evidence of viability reported in the literature. It is insufficiently developed to judge its proliferation resistance potential.

e) Annealing

The removal of volatile fission products by merely annealing of the spent nitride fuel is the most speculative of all the options proposed. Nevertheless, removal of some of the volatile fission products, particularly iodine, may prove to be a useful head-end step for one of the other process options. It is doubtful that merely annealing to remove the volatile fission products would be an adequate separations process because most of the noble metal fission products would remain with the actinide nitrides. This process option has not been developed to the extent needed to assess its proliferation resistance potential.

Waste Stream Considerations

U.S. experience indicates that recovery and recycle of >99.9% of the actinides is a very difficult goal to achieve for dry reprocessing technologies, unless secondary treatment processes are developed alongside the main process. If several percent of the throughput of the process must be sent to a secondary treatment to avoid slow buildup of TRU inventories in the waste stream, clearly the secondary streams are of interest in a proliferation-resistance and safeguardability evaluation. Moreover, the most straightforward technique for secondary stream treatment may be an aqueous process. Thus, the issue of secondary treatment needs special attention.

4.2.2. Safeguards Considerations with BREST Systems

Just as BREST has unique features in its reactor and in its fuel cycle concepts and options, it would as well bring unique demands and opportunities in safeguards. This section will survey safeguards considerations for BREST.

As discussed above, several fuel cycle options have been proposed as part of the BREST reactor concept: electrometallurgical, aqueous, and molten and gas fluorides. Whichever technique is chosen, the BREST fuel cycle will be very distinct from a safeguards perspective from any of the commercial PUREX reprocessing facilities deployed today, and from any of the uranium or MOX fuel fabrication facilities now in operation. A BREST system would represent an entirely new situation for the IAEA in terms of both verification and detection. Of concern will be the ability of the IAEA to both monitor materials (item accounting) and verify that the associated facilities are being used only for authorized activities (process monitoring). Whichever

fuel cycle concept is chosen, the BREST concept requires actinide and fission product carry-over into recycled fuel. This will cause unique challenges in both item accountancy and process monitoring due to the resultant remote nature of the process.

Of direct relevance to assessing these challenges is the U.S. operational experience with item accounting in remotely-operated dry process technology operations via electrometallurgical fuel treatment operations at Argonne National Laboratory. This experience has successfully demonstrated ways in which such a process can meet US MC&A requirements such as those promulgated in DOE order 5633.3b. For example, item accounting for FCF process operations has relied on a unique combination of model and measurement techniques. This model-based system was necessary because the materials undergo initial dissolution and subsequent processing in a highly radioactive, physically closed system (the electrorefiner) where a homogeneous sample suitable for material accounting is unavailable (unlike the dissolution tank in the PUREX process), and where holdup in key pieces of process equipment can be difficult to quantify.

Although the necessity for remote operation provides additional inherent barriers to material diversion (as described in the Wymer-Bengelsdorf report of Proliferation Implications of the Integral Fast Reactor, Ref. 21), it also requires that, at least under the constraints of current technology, modeling be used in conjunction with a posteriori measurements to verify material holdups and maintain continuity of knowledge. This requires an in-depth knowledge of the entire fuel cycle process and associated facilities, equipment, and operations. For example, in FCF, highly detailed reactor burnup calculations were used successfully to replace real-time process measurements. At the time the Wymer-Bengelsdorf report on IFR safeguards was issued, it was noted that this "input specification-by-calculation" was outside the traditional IAEA approach. Since then, there has been precedence for relying on measurement-augmented modeling to meet IAEA safeguards requirements. This precedence comes from the IAEA acceptance of fast reactor fuel and blanket characterization that was performed for the BN350 reactor in Kazakstan. Here, detailed physics modeling of reactor run characteristics combined with simple passive nondestructive assay measurement provided a validated, quantitative estimate of Pu isotopics in the fuel and blanket materials. The IAEA accepted this procedure. Interestingly, this study also demonstrates an advantage of the fast reactor in terms of verification NDA: fast reactors produce a lower quantity of spontaneously fissioning higher actinides, particularly Cm, than a LWR. This allows the use of simple measurements combined with in-depth calculations to quantify fissile material content of the spent fuel. The input specification by reactor physics calculations is also less difficult in BREST than for EBR-II, which had a much more computationally-challenging blanket. The ANL experience with safeguards for the FCF and the experience with quantifying fissile materials content in the BN350 fuels demonstrate unique approaches to safeguards that may be necessary for a BREST fuel cycle.

The above examples deal with verification of material attributes and item accountancy. The threat of facility and process misuse is also a primary safeguards concern. After the events of the last decade in both Iran and Iraq, the IAEA launched an enhanced safeguards program aimed at detecting both clandestine (proliferant) facilities and undeclared (unauthorized) activities conducted within declared facilities. Although the United States has demonstrated the success of item accounting under the unique constraints of an electrorefining process, to date there has not been any significant effort to examine the challenges related to verification of authorized activities in the dry processing facilities. The Wymer-Bengelsdorf report stated that there was nothing inherent in the electrorefining process that would cause significant process observability problems. Again, model/measurement-based approaches may be useful to verify operations and support transparency goals. For example, combinations of process modeling and plant operations may be used to provide a unique observable to verify consistency of operations with declared activities through correlation of plant sequences with environmental measurements and process measurements. This approach is possible whether or not the

reactor and fuel cycle are co-located and may provide a near real-time indication of proliferant behavior. At any rate, the degree to which a BREST process is transparent compared to other fuel cycle designs is an issue that should be the subject of review.

The challenges of item accountancy and process verification, described above, will be compounded by the desired shift toward the deployment of automated, remotely operated monitoring equipment. Since the break-up of the Soviet Union, the amount of nuclear material and the number of facilities under IAEA inspection has expanded significantly. With the increased demand on limited IAEA resources, it was recognized that the present approach at safeguards, that of relying heavily on on-site inspection and verification, was inadequate and labor intensive. It was further recognized that future safeguards systems must augment (not replace) reliance on manned inspections and must move toward the deployment of remote monitoring systems. This may be a significant challenge as the operation of the BREST fuel cycle is, as with the FCF, conducted under highly radioactive conditions in remotely operated equipment. To optimize the use of present technologies, the BREST system design must accommodate the use of remote sensing technologies. The design of the BREST system to incorporate remote monitoring sensors, both for item accountancy and process-use verification, will require research attention.

It is clear that the deployment of a BREST system will pose new challenges for IAEA verification of material security and of authorized facility usage. The inherent proliferation-resistance features of a proposed BREST system need to be examined closely as they relate to the safeguardability of the proposed fuel cycle. The US experience, mainly through the operation of non-aqueous fuel processing for fast reactors, may provide a technological and experience base from which to evaluate the safeguards aspects of the proposed BREST system and to develop effective safeguards approaches for such a system. For example, based on this U.S. experience, we know that BREST R&D should focus on techniques to better measure the presence and nature of material in-process, hold-up measurement techniques should be developed, and the plants and process equipment should be designed to accommodate remote monitoring and NDA equipment. There does not appear to be inherent limitations of a BREST system to accommodate the level of material and process transparency necessary for safeguards acceptance. On the contrary, several attributes of a fast-spectrum system coupled to a fuel cycle to create a closed system may provide safeguards enhancements over LWR-based once-through fuel cycles.

4.3 Radiation-Equivalent Waste Disposal

Extensive discussion is given in the Russian White Book of Nuclear Power (Ref. 18) of the BREST fuel-cycle goal of "radiation equivalent waste disposal" or, equivalently, the "radiation balance" goal. The basic idea is to design the overall fuel cycle such that the radiological toxicity of discharged nuclear waste is no greater than the radiological toxicity previously extracted from the earth through uranium mining. A large number of fuel cycle and processing scenarios are described in the white book, along with corresponding estimates of the time required to accomplish the radiation balance in each scenario.

An initial review of these scenarios suggests that the targeted balance could be achieved within roughly 200 years of spent fuel discharge. Accomplishing this goal requires separation of cesium, strontium, technetium and iodine from the irradiated fuel, and hence, places new demands on the dry recycle and waste treatment technologies. It also relies on efficient transmutation of the long-lived fission products (LLFP) Tc-99 and I-129 and thus requires (a) development of suitable incineration targets for the LLFP, and (b) achievement of acceptably high in-core transmutation rates and acceptably low recycle losses for the LLFP. Finally,

attainment of the radiation balance requires new approaches for co-extraction of Th and Ra with U from uranium ore, and for their subsequent management in the fuel cycle. Considerable research and development are therefore needed to demonstrate the feasibility of the radiation-equivalent waste disposal goal.

Bibliography

1. B. F. Gromov, et al., "Design of Reactor Facilities Using Lead-Bismuth Coolant for Atomic Submarine Operation. A Brief History and General Results of Their Operation," Proceedings of the Conference on Heavy Liquid Metal Coolants in Nuclear Technology, Obninsk, Russia, October 5-9, 1998.

2. E. O. Adamov, et al., "Conceptual Design of the BREST-300 Lead-Cooled Fast Reactor," Proceedings of the International Topical Meeting on Advanced Reactors Safety, Vol. 1, pp. 509-515, American Nuclear Society, Pittsburgh, Pennsylvania, April 17-21, 1994.

3. V. V. Orlov, et al., "Lead-Cooled Reactor Core, Its Characteristics and Features," Proceedings of the International Topical Meeting on Advanced Reactors Safety, Vol. 1, pp. 516-523, American Nuclear Society, Pittsburgh, Pennsylvania, April 17-21, 1994.

4. V. V. Orlov, et al., "Study of Ultimate Accidents for Lead-Cooled Fast Reactor," Proceedings of the International Topical Meeting on Advanced Reactors Safety, Vol. 1, pp. 538-543, American Nuclear Society, Pittsburgh, Pennsylvania, April 17-21, 1994.

5. E. Adamov, et al., "The Next Generation of Fast Reactors," Nuclear Engineering and Design, 173, pp. 143-150, 1997.

6. V. S. Tsikounov, "Design Features of BREST Reactor," Seminar On the Design and Safety Aspects of Heavy Liquid Metal Cooled (HLMC) Power Systems, Russian International Nuclear Safety Center, Moscow, October 12-13, 1998.

7. V. N. Leonov, "Lead Coolant as the Factor of Inherent Safety," Seminar On the Design and Safety Aspects of Heavy Liquid Metal Cooled (HLMC) Power Systems, Russian International Nuclear Safety Center, Moscow, October 12-13, 1998.

8. V. S. Smirnov, "Physical and Technical Characteristics of BREST Reactors Ensuring Their Deterministic Safety," Seminar On the Design and Safety Aspects of Heavy Liquid Metal Cooled (HLMC) Power Systems, Russian International Nuclear Safety Center, Moscow, October 12-13, 1998.

9. A. G. Sila-Novitsky, "Design of the Reactor Core and Its Components," Seminar On the Design and Safety Aspects of Heavy Liquid Metal Cooled (HLMC) Power Systems, Russian International Nuclear Safety Center, Moscow, October 12-13, 1998.

10. A. I. Filin, "Experiments to Justify BREST Reactor Concept. Results and Plans for Future Investigates," Seminar On the Design and Safety Aspects of Heavy Liquid Metal Cooled (HLMC) Power Systems, Russian International Nuclear Safety Center, Moscow, October 12-13, 1998.

11. A. I. Filin, et al., "Design Features of BREST Reactors. Experimental Work to Advance the Concept of BREST Reactors. Results and Plans," Proceedings of the International Conference on Future Nuclear Systems. Global '99, American Nuclear Society, Jackson Hole, Wyoming, August 29 - September 3, 1999.

12. Title 10, Code of Federal Regulations, Part 50, "Domestic Licensing of Production and Utilization Facilities," Appendix A. "Generalized Design Criteria for Nuclear Power Plants."

13. "Preapplication Safety Evaluation Report for the Power Reactor Innovative Small Module (PRISM) Liquid-Metal Reactor, Final Report," NUREG-1368, U. S. Nuclear Regulatory Commission, Office of Nuclear Reactor Regulation.

14. R. D. Leggett, and L. C. Walters, "Status of LMR Fuel Development in the United States," J. Nucl. Materials, 204, pp. 23-32 (1993).

15. Stepanov, et al., "SVBR-75: A Reactor Module for Renewal of VVER-440 Decommissioning Reactors," IAEA Meeting on Technology, Design, and Safety Aspects of Non-Electrical Applications of Nuclear Energy, Vienna, Austria.

16. V. I. Oussanov., et al., "Long-lived Residual Activity Characteristics of Some Liquid Metal Coolants for Advanced Nuclear Energy Systems," Proceedings of the International Conference on Future Nuclear Systems, Global '99, American Nuclear Society, Jackson Hole, Wyoming, August 29 - September 3, 1999.

17. A. V. Lopatkin and V. V. Orlov, "Fuel Cycle of BREST-1200 with Non-Proliferation of Plutonium and Equivalent Disposal of Radioactive Waste," Proceedings of the International Conference on Future Nuclear Systems, Global '99, American Nuclear Society, Jackson Hole, Wyoming, August 29 - September 3, 1999.

18. E. O. Adamov, Editor, White Book of Nuclear Power, First Edition, RDIPE (1998).

19. V.V. Orlov, I.Kh. Ganev, V.V. Naumov, "Fuel Cycle for Large-Scale Nuclear Power in Russia Based on Naturally Safe Fast Lead-Cooled Reactors and Thermal Reactors," HLW Management at the NP Deployment Stage, RDIPE Report No. 050-236-4546, 1994.

20. V. Orlov, et al., "Nuclear Power of the Coming Century and Requirements to the Nuclear Technology," Proceedings of the International Conference on Future Nuclear Systems. Global '99, American Nuclear Society, Jackson Hole, Wyoming, August 29 - September 3, 1999.

21. R. G. Wymer, et.al., "An Assessment of the Proliferation Potential and International Implications of the Integral Fast Reactor", Martin Marietta, May 1992.

Distribution for ANL-00/22

Internal:

H. Khalil, RAE, 208
M.J. Lineberry, ANL West
J.E. Cahalan, RAE, 208
J.L. Willit, CMT, 205
B.W. Spencer, RAE, 208
S.L. Hayes, ANL West
D.C. Crawford, ANL West
D.C. Wade, OTD-ER, 208
D.J. Hill, RAE, 208
E. Fujita, RAE, 208
D. Weber, RAE, 208
J. Binder, RAE, 208
M. Farmer, RAE, 208
J. Roglans, RAE, 208
J. Reifman, RAE, 208
T. Sofu, RAE, 208
R. Hill, RAE, 208
R. Wigeland, RAE, 208
C. Grandy, RAE, 208
C. Adams, RAE, 208
D. Pan, RAE, 208
T.A. Taiwo, RAE, 208
R.D. McKnight, RAE, 208
Y.I. Chang, OTD-ER, 208
M. Derbidge, OTD-ER, 208
J. Helt, OTD-ER, 208
L.W. Deitrich, OTD-ER, 208
D. Lewis, CMT, 205
E.C. Gay, CMT, 205
S.K. Bhattacharyya, TD, 360
P.J. Finck, TD, 360
T.J. Yule, TD, 360
D. Pedersen, RAE, 208
R. W. Benedict, ANL West
H.F. McFarlane, ANL West
S.P. Henslee, ANL West
G.L. Lentz, ANL West
W.R. Vroman, ANL West
M. Sanchez, ANL West
S. Aumeier, ANL West

External:

ANL-East Library
ANL-West Library
DOE-OSTI (2) - Office of Scientific and Technical Information
DOE-CH, Manager
RAE Division (30)

T. Sanders, Sandia National Laboratories, Albuquerque, NM 87123-0111
M. Todosow, Brookhaven National Laboratory, Upton, NY 11973
D. Moses, Oak Ridge National Laboratory, Oak Ridge, TN 37831
R. Bennett, Idaho National Engineering and Environmental Laboratory, Idaho Falls, ID 83415
M. Strauch, Lawrence Livermore National Laboratory, Livermore, CA 94550
C. Smith, Lawrence Livermore National Laboratory, Livermore, CA 94550
G. VanTuyle, Los Alamos National Laboratory, Los Alamos, NM 87545
E. Arthur, Los Alamos National Laboratory, Los Alamos, NM 87545
B. Reid, Pacific Northwest National Laboratory, Richland, WA 99352

Professor M. Kazimi, Massachusetts Institute of Technology, Cambridge, MA 02139
Professor E. Greenspan, University of California at Berkeley, Berkeley, CA 94720

John Herczeg, DOE, 19901 Germantown Rd., Room A-243B, Germantown, MD 20874-1290
Shane Johnson, DOE, 19901 Germantown Rd., Room F-410, Germantown, MD 20874-1290
Nort Haberman, DOE, 1000 Independence Ave., SW, Washington, DC 20585
Jim Bresee, DOE, 1000 Independence Ave., SW, Washington, DC 20585
Rob Versluis, DOE, 1000 Independence Ave., SW, Washington, DC 20585
Maureen McCarthy, DOE, 1000 Independence Ave., SW, Washington, DC 20585
E. Moniz, DOE, 1000 Independence Ave., SW, Washington, DC 20585
James M. Turner, DOE, 1000 Independence Ave., SW, Washington, DC 20585

V. Reis, SAIC, 19901 Germantown Rd., Room A-275, Germantown, MD 20874-1290